**FACE DRIVER CoAE.**
FROM RÖHM.

# IT CAN DO (ALMOST) ANYTHING*. OF COURSE! IT‘S FROM RÖHM.

*TURNING AND MILLING

RÖHM

# THE CoAE. FROM RÖHM.

The CoAE is a face driver that is manually clamped in a turning machine. It is mainly used for turning over the entire length. The components are clamped on the face side. In addition, milling can be carried out in the same clamping process. It scores points with constant clamping force even with an uneven end face or large deviations from the orthogonality. The mount has no radial play. Due to the modular construction, it is possible to use different centers as well as different driver discs with a single face driver and that way machine a great variety of geometries. The CoAE can be used with both clockwise and counter-clockwise rotation.

The CoAE replaces Röhm face drivers CoA as well as CoE. It combines the benefits of both face drivers in one.

## FOR WHOM

Manual machining equipment
(CoK variant for automatic machining equipment)

## FOR WHAT

Turning and milling of rotationally symmetric geometries over the entire length

## WHY

- Concentricity of up to 0.01 mm
- Up to 8 kN axial loading
- Up to 350 kg workpiece weight
- Sensitive, axially-adjustable spring assembly for adaptation of the centering force
- No radial play

## HOW MANY

- It is possible to machine a multitude of geometries within one size with one body

# YOUR SHORTCUT TO INCREASED PRODUCTIVITY

## Complete OD turning over the entire length

Experienced lathe operators recommend ‘turning between centers’ for machining a turned part over the entire length. But if the cutting force should be somewhat higher, then just one center is soon not enough for the torque to be transferred. Now a face driver on the side of the main spindle comes into play. Its teeth (2) press into the material on the front face of the workpiece (4) and that way transfer the torque. That’s where the name ‘face driver’ comes from: the workpiece is driven on the face side. The CoAE face driver (1) has an integrated center (3) to guide the workpiece. The CoAE can be loaded axially by up to 8 kN in order to transfer sufficient torque. The force for this comes from the tailstock, which transfers it via a live center (5). Here, we recommend using a center with force measurement such as the Röhm Control center.

*Here, we recommend using a center with integrated force measurement on the tailstock side, such as the Röhm Control center.*

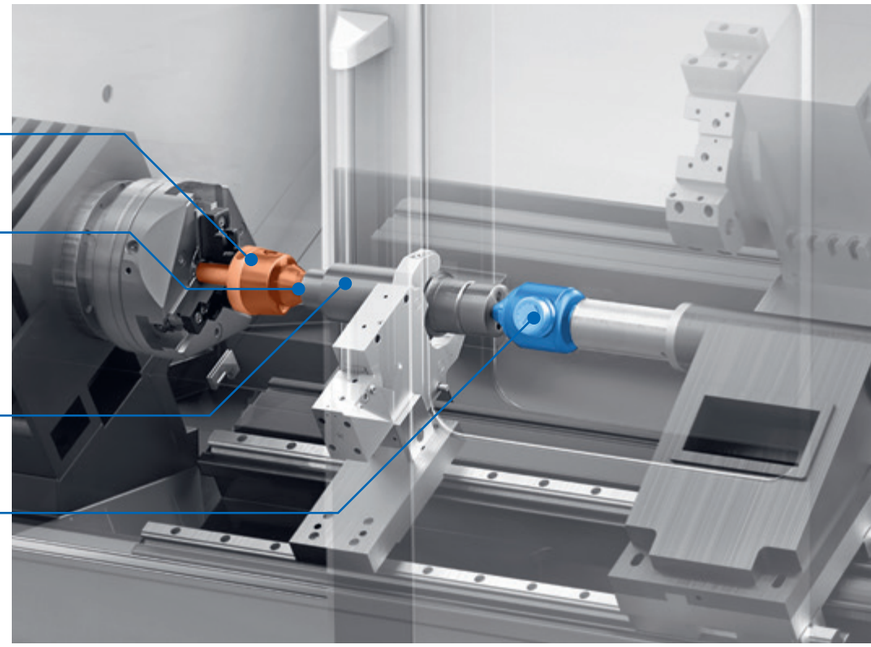


The CoAE is always used when rotationally-symmetric parts are to be machined along the entire length, or the surface does not allow any impressions of the clamping device, or if subsequently cutting off the clamping is not possible for reasons of accuracy, or reclamping is not expedient – whether for financial reasons (tooling costs) or in order to not damage the surface.

## Typical applications:

- drive shafts
- gear shafts
- camshafts
- rotor shafts
- crankshafts

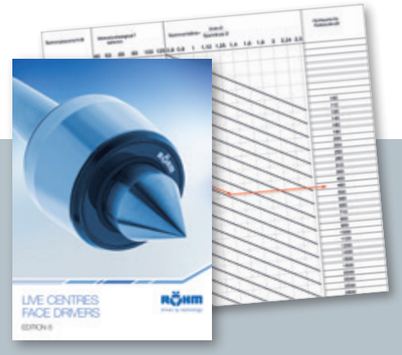


*The correct axial force can be determined easily based on the clamping force charts. You can find them in the Röhm catalogue or in the internet at* **www.roehm.biz**.

*The axial force can be determined even easier with the Röhm slide rule.*

# NO RADIAL PLAY

## For turning and milling in one clamping process

The driver disc is supported on one level made of three bolt heads. The bolts transfer the torque to the driver disc. This happens without any play due to the design of the bolt heads and pockets on the bottom of the driver disc. As a result, you can also machine the workpiece clamped in the CoAE with the milling spindle at any time. The workpiece remains. For the highest precision.

# HYDRAULIC BOLT MOUNTING[1]

## For uneven end faces and deviations in the orthogonality

What does the driver disc do if the end face is not completely perpendicular to the axis of rotation? And, what do you do if the end face is not completely flat? Nothing. More specifically, it doesn't make any difference. The driver disc is supported on one level made of three rounded bolt heads. They are hydraulically mounted and can be moved axially. What's the benefit? The driver plate always adapts to the position of the end face of the workpiece. The bolts shift against each other and support the disc in exactly this position.

[1] Excluded: CoAE with short taper mount – compensation is mechanical here. The supporting bolts are supported via a movable disc.

# HOW CAN YOU MOUNT THE CoAE ON THE MAIN SPINDLE?

## For different connection possibilities

There are different types of mounts for the CoAE:

**1.** With a morse taper – when working with higher forces, we recommend the configuration with an additional draw-off nut in order to easily remove the face driver from the mount after use.

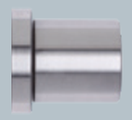

*here are matching mounting sleeves to clamp the CoAE with morse taper in a chuck.*

**2.** With a cylinder shank – with it, the face driver can be clamped directly in a lathe chuck that is already mounted on the machine. This saves removing the chuck.

**3.** With short taper ISO 702-1 (DIN55026)

*„The CoAE with a short taper can also be clamped in a three-jaw chuck to be incorporated in the machine. A corresponding centering shoulder is provided for this."*

**4.** With a center mount

*There is a matching mounting flange (these are identical to the ones for the CoK-AE) to clamp the CoAE with a center mount in a spindle with short taper mount.*

# THE CoK-AE FACE DRIVER

## For power-operated, automatic clamping

There is the CoK-AE face driver for power-operated, automatic clamping on CNC machine tools or turning/milling centers.

It was developed especially for clamping heavy workpieces up to 350 kg. In the process, the CoK-AE was designed so that the axial force is initiated via the actuation cylinder of the processing machine.

Like with the CoAE with short taper mount, compensation of uneven end faces is handled mechanically. A Röhm cylinder of type OVS, for example, is suitable for actuation. There are matching mounting flanges with short taper for mounting a single CoK-AE body on different cylinder sizes.

*The power operation can be handled by a hydraulic cylinder from Röhm of the type OVS, for example. We would be happy to offer you the matching tie rods to go with the cylinder, on request.*

*The mounting flange for cylinders with short taper is available in taper sizes 5, 6, 8, and 11. The threaded connection is available in sizes ISO 702-1 (DIN55026, threaded connection), 701-2 (DIN55029, camlock) and 702-3 (studs with nuts). The flanges also fit on the CoAE with center mount.*

# TECHNOLOGY

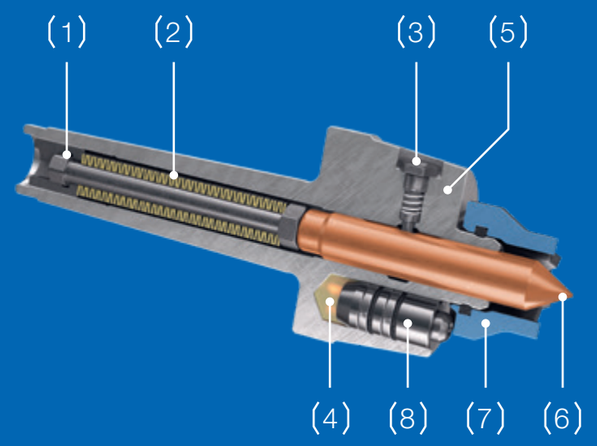


(1) Set screw
(2) Spring assembly
(3) Locking device
(4) Hydraulic reservoir
(5) Body
(6) Center
(7) Driver disc
(8) Bolts

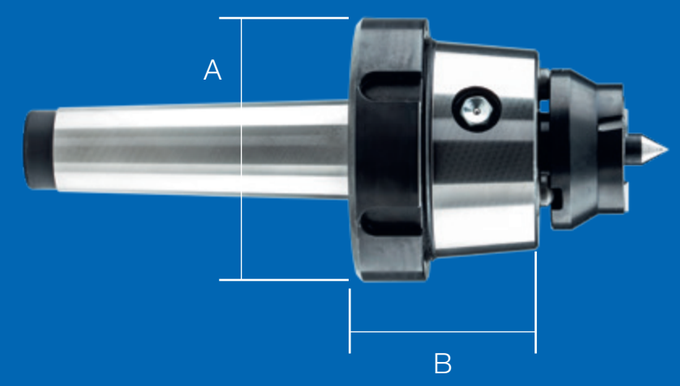


# HOW THE CoAE FROM ROHM WORKS

The body (5) made of steel accommodates the components of the CoAE and protects them. It is made of one piece and ensures precision during machining due to its high inherent stiffness. The workpiece is centered via exchangeable centers (6). A locking device (3) ensures a firm hold in the body. The center is supported axially with a spring assembly (2), with preloading that can be set via a set screw (1). The workpiece is clamped via easily exchangeable driver discs (7), which are snapped on the body of the CoAE. The actual torque transmission from the body to the driver disc is handled by three bolts (8). They can be moved axially and are connected to each other hydraulically (4). That way, they can compensate for skewing of the driver disc caused by uneven or non-perpendicular end face of the workpiece.

The body is connected to the machine tool via morse taper, center mount, cylindrical mount or short taper.

For the variant with short taper, the bolts are mounted mechanically (instead of hydraulically).

For further information about CoAE visit our website:

**ROEHM.BIZ/COAE**

| Type of mount | MT3 | Cylindrical Shank | Cylindrical Shank | MT4 | MT5 | MT6 | ST5 | Flange | Cylindrical Shank | ST6 | ST8 |
|---|---|---|---|---|---|---|---|---|---|---|---|
| A [mm] | 70 | N.A. | N.A. | 70 | 70 | 70 | 133 | 142 | 85 | 165 | 210 |
| B [mm] | 54 | 56,5 | N.A. | 56,5 | 56,5 | 56,5 | N.A. | 30 | N.A. | 35 | 40 |
| Stroke [mm] | 10 | 15 | 15 | 15 | 15 | 15 | 15 | 15 | 15 | 15 | 15 |
| Shank diameter | - | 25 | 32 | - | - | - | - | - | 85 | - | - |
| Flange diameter | - | - | - | - | - | - | - | 100 | - | - | - |
| **Id.-No.** | **1340429** | **1341541** | **1341542** | **1340430** | **1340431** | **1340432** | **1340439** | **1340442** | **1340437** | **1340440** | **1340441** |

## WITH DRAW-OFF NUT

| | | | | | | | | | | | |
|---|---|---|---|---|---|---|---|---|---|---|---|
| **Id.-No.** | **1340433** | - | - | **1340434** | **1340435** | **1340436** | - | - | - | - | - |

## CoK-AE

| | | | | | | | | | | | |
|---|---|---|---|---|---|---|---|---|---|---|---|
| Stroke [mm] | - | - | - | - | - | - | - | 5 | - | - | - |
| **Id.-No.** | - | - | - | - | - | - | - | **1340442** | - | - | - |

# EXCHANGEABLE DRIVER DISCS

## For different geometries

The driver disc is simply snapped onto the body of the CoAE. That way, different driver discs can be used for various applications. One face driver for (almost) all cases.
If particularly high cutting forces are called for, driver discs lend themselves especially for clockwise or alternatively counter-clockwise rotation.
If the workpiece is hard (up to 40 HRC) so that the teeth of the driver disc cannot bite into the material very well, there are driver discs with teeth designed with exchangeable hard metal driving plates. It goes without saying that the hard metal plates are also available from Röhm.

**GOOD TO KNOW**

The driver discs of the new CoAE fit on the current CoA (Please note: for technical reasons, this does not work the other way around. The old CoA and CoE driver discs do not fit on the new CoAE).

DRIVER DISC, DIRECT TOOTHED, AS OF 8 MM CLAMPING CIRCLE DIAMETER, FOR MATERIALS UP TO 35 HRC

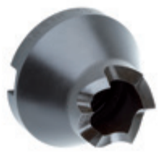

COUNTER-CLOCK-WISE ROTATION
Picture shows Ø25

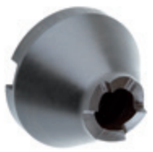

CLOCKWISE ROTATION
Picture shows Ø20

COUNTER/CL OCKWISE ROTATION
Picture shows Ø12

DRIVER DISC, WITH EXCHANGEABLE HARD METAL PLATES, AS OF 40 MM CLAMPING CIRCLE DIAMETER, FOR MATERIALS UP TO 40 HRC

COUNTER-CLOCK-WISE ROTATION
Picture shows Ø63

CLOCKWISE ROTATION
Picture shows Ø63

COUNTER/CL OCKWISE ROTATION
Picture shows Ø63

HARD METAL DRIVER PLATES
for clockwise OR counter-clockwise (left) rotation as well as clockwise AND counter-clockwise (right)



# EXCHANGEABLE CENTERS

## For different geometries

The center point is simply plugged into the body of the CoAE and radially locked via a spring bolt. That way, it is possible to use different centers with various head geometries for numerous applications. One face driver really for (almost) all cases.

The centers are axially supported in the CoAE by springs. Here, uniform spring force ensures sensitive adjustment. The spring can be preloaded by means of a screw.

CENTER POINT
as of an 8 mm clamping diameter

CENTRING TAPER
as of a 21 mm taper diameter

# MODULAR USE

## DRIVER DISC

| Diameter [mm] | 8 | 10 | 12 | 16 | 20 | 25 | 32 | 40 | 50 | 63 | 80 |
|---|---|---|---|---|---|---|---|---|---|---|---|
| Driver disc counter-/clockwise rotation | **1341603** | **1341604** | **1341605** | **1341606** | **1341607** | **1341608** | **1341609** | - | - | - | - |
| Driver disc clockwise rotation | **1341610** | **1341611** | **1341612** | **1341613** | **1341614** | **1341615** | **1341616** | - | - | - | - |
| Driver disc counter-clockwise rotation | **1341617** | **1341618** | **1341619** | **1341620** | **1341621** | **1341622** | **1341623** | - | - | - | - |
| Driver disc counter-/clockwise rotationwith hard metal driver plates (6x3,2 mm) | - | - | - | - | **1341624** | **1341625** | **1341626** | - | - | - | - |
| Driver disc clockwise rotation with hard metal driver plates (6x3,2 mm) | - | - | - | - | **1341628** | **1341629** | **1341630** | - | - | - | - |
| Driver disc counter-clockwise rotationwith hard metal driver plates (6x3,2 mm) | - | - | - | - | **1341631** | **1341632** | **1341633** | - | - | - | - |
| Driver disc counter-/clockwise rotation with hard metal driver plates (9,5x3,2 mm) | - | - | - | - | - | - | - | **1341627** | **1341635** | **1341636** | **1341637** |
| Driver disc clockwise rotation with hard metal driver plates (9,5x3,2 mm) | - | - | - | - | - | - | - | **1341638** | **1341639** | **1341640** | **1341641** |
| Driver disc counter-clockwise rotationwith hard metal driver plates (9,5x3,2 mm) | - | - | - | - | - | - | - | **1341642** | **1341643** | **1341644** | **1341645** |

| **Body CoAE** | | | | | | | | | | | | | |
|---|---|---|---|---|---|---|---|---|---|---|---|---|---|
| | **Id.-No.** | With draw-off nut | | | | | | | | | | | |
| MT3 | **1340429** | **1340433** | x | x | x | x | x | x | x | x | x | x | x |
| Cylinder shank Ø 25 | **1341541** | - | x | x | x | x | x | x | x | x | x | x | x |
| Cylinder shank Ø 32 | **1341542** | - | x | x | x | x | x | x | x | x | x | x | x |
| MT4 | **1340430** | **1340434** | x | x | x | x | x | x | x | x | x | x | x |
| MT5 | **1340431** | **1340435** | x | x | x | x | x | x | x | x | x | x | x |
| MT6 | **1340432** | **1340436** | x | x | x | x | x | x | x | x | x | x | x |
| Cylinder shank Ø 85 | **1340437** | - | x | x | x | x | x | x | x | x | x | x | x |
| ST5 | **1340439** | - | x | x | x | x | x | x | x | x | x | x | x |
| Flange | **1340442** | - | x | x | x | x | x | x | x | x | x | x | x |
| ST6 | **1340440** | - | x | x | x | x | x | x | x | x | x | x | x |
| ST8 | **1340441** | - | x | x | x | x | x | x | x | x | x | x | x |
| **Body CoK-AE** | | | | | | | | | | | | | |
| Flange | **1340444** | - | x | x | x | x | x | x | x | x | x | x | x |

*– = Not compatible* *X = Compatible with Id.-No.* *(X) = Limited application*

## CENTRES COAE

| Circle diameter | 8-10 | 12 | 16 | 20 | 25-80 | 25-80 |
|---|---|---|---|---|---|---|
| Size | 4 | 6 | 10 | 12 | 16 | 16 |
| **Id.-No.** | **1341941** | **1341942** | **1341943** | **1341944** | **1341945** | **1342112** |
| **Body CoAE** | | | | | | |
| MT3 | x | x | x | x | x | x |
| Cylinder shank Ø 25 | x | x | x | x | x | x |
| Cylinder shank Ø 32 | x | x | x | x | x | x |
| MT4 | x | x | x | x | x | x |
| MT5 | x | x | x | x | x | x |
| MT6 | x | x | x | x | x | x |
| Cylinder shank Ø 85 | x | x | x | x | x | x |
| ST5 | x | x | x | x | x | x |
| Flange | x | x | x | x | x | x |
| ST6 | x | x | x | x | x | x |
| ST8 | x | x | x | x | x | x |

## CENTRES COK-AE

| Circle diameter | 8-10 | 12 | 16 | 20 | 40-80 |
|---|---|---|---|---|---|
| Size | 4 | 6 | 10 | 12 | 14x1,5 |
| **Id.-No.** | **88121** | **88122** | **88123** | **88124** | **85002** |
| **Body CoK-AE** | | | | | |
| Flange | x | x | x | x | x |

## CENTRING TAPER

| Taper diameter | 21 | 27 | 34 | 40 | 48 | 56 |
|---|---|---|---|---|---|---|
| **Id.-No.** | **1341946** | **1341947** | **1341948** | **1341949** | **1341950** | **1341951** |
| **Body CoAE** | | | | | | |
| MT3 | x | x | x | x | x | x |
| Cylinder shank Ø 25 | x | x | x | x | x | x |
| Cylinder shank Ø 32 | x | x | x | x | x | x |
| MT4 | x | x | x | x | x | x |
| MT5 | x | x | x | x | x | x |
| MT6 | x | x | x | x | x | x |
| Cylinder shank Ø 85 | x | x | x | x | x | x |
| ST5 | x | x | x | x | x | x |
| Flange | x | x | x | x | x | x |
| ST6 | x | x | x | x | x | x |
| ST8 | x | x | x | x | x | x |

## MOUNTING SLEEVES

| MT (inside) | 3 | 4 | 5 | 6 |
|---|---|---|---|---|
| **Id.-No.** | **85033** | **85034** | **85035** | **85036** |
| **Body CoAE** | | | | |
| MT3 | x | - | - | - |
| Cylinder shank Ø 25 | - | - | - | - |
| Cylinder shank Ø 32 | - | - | - | - |
| MT4 | - | x | - | - |
| MT5 | - | - | x | - |
| MT6 | - | - | - | x |
| Cylinder shank Ø 85 | - | - | - | - |
| ST5 | - | - | - | - |
| Flange | - | - | - | - |
| ST6 | - | - | - | - |
| ST8 | - | - | - | - |

## FLANGE

| MORSE TAPER | | 5 | 6 | 8 | 11 |
|---|---|---|---|---|---|
| **Id.-No.** | **ISO-702-1** | **88485** | **88486** | **88487** | **88488** |
| **Id.-No.** | **ISO-702-3** | **88480** | **88481** | **88482** | **88483** |
| **Id.-No.** | **ISO-702-2** | **88495** | **88496** | **88497** | **88498** |
| **Body CoAE** | | | | | |
| MT3 | | - | - | - | - |
| Cylinder shank Ø 25 | | - | - | - | - |
| Cylinder shank Ø 32 | | - | - | - | - |
| MT4 | | - | - | - | - |
| MT5 | | - | - | - | - |
| MT6 | | - | - | - | - |
| Cylinder shank Ø 85 | | - | - | - | - |
| ST5 | | - | - | - | - |
| Flange | | x | x | x | x |
| ST6 | | - | - | - | - |
| ST8 | | - | - | - | - |
| **Body CoK-AE** | | | | | |
| Flange | | x | x | x | x |

*(–) = Not compatible* *(X) = Compatible with Id.-No.* *((X)) = Limited application*

## INTERCHANGEABLE DRIVING DISCS

| Diameter [mm] | Id.-No. | 8 | 10 | 12 | 16 | 20 | 25 | 32 | 40 | 50 | 63 | 80 |
|---|---|---|---|---|---|---|---|---|---|---|---|---|
| Driving disc counter-/clockwise rotation | | **1341603** | **1341604** | **1341605** | **1341606** | **1341607** | **1341608** | **1341609** | - | - | - | - |
| Driving disc clockwise rotation | | **1341610** | **1341611** | **1341612** | **1341613** | **1341614** | **1341615** | **1341616** | - | - | - | - |
| Driving disc counter-clockwise rotation | | **1341617** | **1341618** | **1341619** | **1341620** | **1341621** | **1341622** | **1341623** | - | - | - | - |
| Driving disc with inter-changeable carbide driving plates counter-/clockwise rotation (9,5x3,2mm) | | - | - | - | - | - | - | - | **1341627** | **1341635** | **1341636** | **1341637** |
| Driving disc with inter-changeable carbide driving plates clockwise rotation (9,5x3,2mm) | | - | - | - | - | - | - | - | **1341638** | **1341639** | **1341640** | **1341641** |
| Driving disc with inter-changeable carbide driving plates counter-clockwise rotation (9,5x3,2mm) | | - | - | - | - | - | - | - | **1341642** | **1341643** | **1341644** | **1341645** |
| **Centres CoAE** | | | | | | | | | | | | |
| Ø4 | **1341941** | x | x | - | - | - | - | - | - | - | - | - |
| Ø6 | **1341942** | - | - | x | - | - | - | - | - | - | - | - |
| Ø10 | **1341943** | - | - | - | x | - | - | - | - | - | - | - |
| Ø12 | **1341944** | - | - | - | - | x | - | - | - | - | - | - |
| Ø16 | **1341945** | - | - | - | - | - | x | x | x | x | x | x |
| Ø16 | **1342112** | - | - | - | - | - | x | x | x | x | x | x |
| **Centres CoK-AE** | | | | | | | | | | | | |
| Ø4 | **88121** | x | x | - | - | - | - | - | - | - | - | - |
| Ø6 | **88122** | - | - | x | - | - | - | - | - | - | - | - |
| Ø10 | **88123** | - | - | - | x | - | - | - | - | - | - | - |
| Ø12 | **88124** | - | - | - | - | x | x | x | - | - | - | - |
| M14x1,5 | **85002** | - | - | - | - | - | - | - | x | x | x | x |
| **Taper** | | | | | | | | | | | | |
| 21 | **1341946** | - | - | - | - | - | - | - | - | x | x | x |
| 27 | **1341947** | - | - | - | - | - | - | - | - | - | x | x |
| 34 | **1341948** | - | - | - | - | - | - | - | - | - | x | x |
| 40 | **1341949** | - | - | - | - | - | - | - | - | - | x | x |
| 48 | **1341950** | - | - | - | - | - | - | - | - | - | - | x |
| 56 | **1341951** | - | - | - | - | - | - | - | - | - | - | x |

## DRIVING DISCS

| Diameter [mm] | Id.-No. | 8 | 10 | 12 | 16 | 20 | 25 | 32 | 40 | 50 | 63 | 80 |
|---|---|---|---|---|---|---|---|---|---|---|---|---|
| Driving disc counter-/ clockwise rotation with interchangeable carbide driving plates (6x3,2mm) | | - | - | - | - | **1341624** | **1341625** | **1341626** | - | - | - | - |
| Driving disc clockwise rotation with inter-changeable carbide driving plates (6x3,2mm) | | - | - | - | - | **1341628** | **1341629** | **1341630** | - | - | - | - |
| Driving disc counter-/ clockwise rotation with interchangeable carbide driving plates (6x3,2mm) | | - | - | - | - | **1341631** | **1341632** | **1341633** | - | - | - | - |
| **Centres CoAE** | | | | | | | | | | | | |
| Ø4 | **1341941** | - | - | - | - | x | (x) | (x) | - | - | - | - |
| Ø6 | **1341942** | - | - | - | - | x | (x) | (x) | - | - | - | - |
| Ø10 | **1341943** | - | - | - | - | - | x | x | - | - | - | - |
| Ø12 | **1341944** | - | - | - | - | - | - | x | - | - | - | - |
| Ø16 | **1341945** | - | - | - | - | - | - | x | - | - | - | - |
| Ø16 | **1342112** | - | - | - | - | - | - | x | - | - | - | - |
| **Centres CoK-AE** | | | | | | | | | | | | |
| Ø4 | **88121** | - | - | - | - | x | (x) | (x) | - | - | - | - |
| Ø6 | **88122** | - | - | - | - | x | (x) | (x) | - | - | - | - |
| Ø10 | **88123** | - | - | - | - | - | x | x | - | - | - | - |
| Ø12 | **88124** | - | - | - | - | - | - | x | - | - | - | - |
| M14x1,5 | **85002** | - | - | - | - | - | - | x | - | - | - | - |

*(–) = Not compatible* *(X) = Compatible with Id.-No.* *(X) = Limited application*

## LIVE CENTRES (TYPE: RÖHM CONTROL)

| MT | | 3 | 4 | 5 | 6 |
|---|---|---|---|---|---|
| **Id.-No.** | **Standard design** | **60798** | **60874** | **60906** | **60915** |
| **Id.-No.** | **with profiled centre point** | **79920** | **79921** | **79922** | **1341944** |
| **Body CoAE** | | | | | |
| MT3 | | x | - | - | - |
| Cylinder shank Ø 25 | | x | x | x | x |
| Cylinder shank Ø 32 | | x | x | x | x |
| MT4 | | - | x | - | - |
| MT5 | | - | - | x | - |
| MT6 | | - | - | - | x |
| Cylinder shank Ø 85 | | x | x | x | x |
| ST5 | | x | x | x | x |
| Flange | | x | x | x | x |
| ST6 | | x | x | x | x |
| ST8 | | x | x | x | x |

*(–) = Not compatible* *(X) = Compatible with Id.-No.* *(X) = Limited application*

# ASSORTMENT TO GET STARTED IMMEDIATELY

## Basic assortment (in the box)

consisting of 1x base body,
2x driver discs
(clamping diameter 12, 32),
2x center points (centering Ø 6, 16)

| Direction of rotation | Draw-off nut | MT3 | MT4 | MT5 | MT6 | Cylinder Shank 25 | Cylinder Shank 32 |
|---|---|---|---|---|---|---|---|
| Right | none | 1341543 | 1341547 | 1341551 | 1341555 | 1341559 | 1341561 |
| Right | with | 1341544 | 1341548 | 1341552 | 1341556 | | |
| Left | none | 1341545 | 1341549 | 1341553 | 1341557 | 1341560 | 1341562 |
| Left | with | 1341546 | 1341550 | 1341554 | 1341558 | | |

## Small assortment (in the wooden box)

consisting of 1x base body,
4x driving plates
(clamping diameter 12, 20, 32, 50),
2x center points (centering Ø 6, 12)

| Direction of rotation | Draw-off nut | MT3 | MT4 | MT5 | MT6 | Cylinder Shank 25 | Cylinder Shank 32 |
|---|---|---|---|---|---|---|---|
| Right | none | 1341563 | 1341567 | 1341571 | 1341575 | 1341579 | 1341581 |
| Right | with | 1341564 | 1341568 | 1341572 | 1341576 | | |
| Left | none | 1341565 | 1341569 | 1341573 | 1341577 | 1341580 | 1341582 |
| Left | with | 1341566 | 1341570 | 1341574 | 1341578 | | |
| Left and right | none | 1381611 | 1381612 | 1381613 | 1381614 | 1381609 | 1381610 |
| Left and right | with | 1382283 | 1382284 | 1382285 | 1382286 | | |

## Large assortment (in the wooden box)

consisting of 1x base body,
10x driving plates
(clamping diameter 10, 12, 16, 20, 25),
32, 40, 50, 63, 80),
5x center points
(centering Ø 4, 6, 10, 12, 16),
1x axial force slide rule

| Direction of rotation | Draw-off nut | MT3 | MT4 | MT5 | MT6 | Cylinder Shank 25 | Cylinder Shank 32 |
|---|---|---|---|---|---|---|---|
| Right | none | 1341583 | 1341587 | 1341591 | 1341595 | 1341599 | 1341601 |
| Right | with | 1341584 | 1341588 | 1341592 | 1341596 | | |
| Left | none | 1341585 | 1341589 | 1341593 | 1341597 | 1341600 | 1341602 |
| Left | with | 1341586 | 1341590 | 1341594 | 1341598 | | |
| Left and right | none | 1381617 | 1381618 | 1381619 | 1381620 | 1381615 | 1381616 |
| Left and right | with | 1382287 | 1382288 | 1382289 | 1382290 | | |

# IT CAN DO (ALMOST) ANYTHING*. OF COURSE! IT‘S FROM RÖHM.

*TURNING AND MILLING

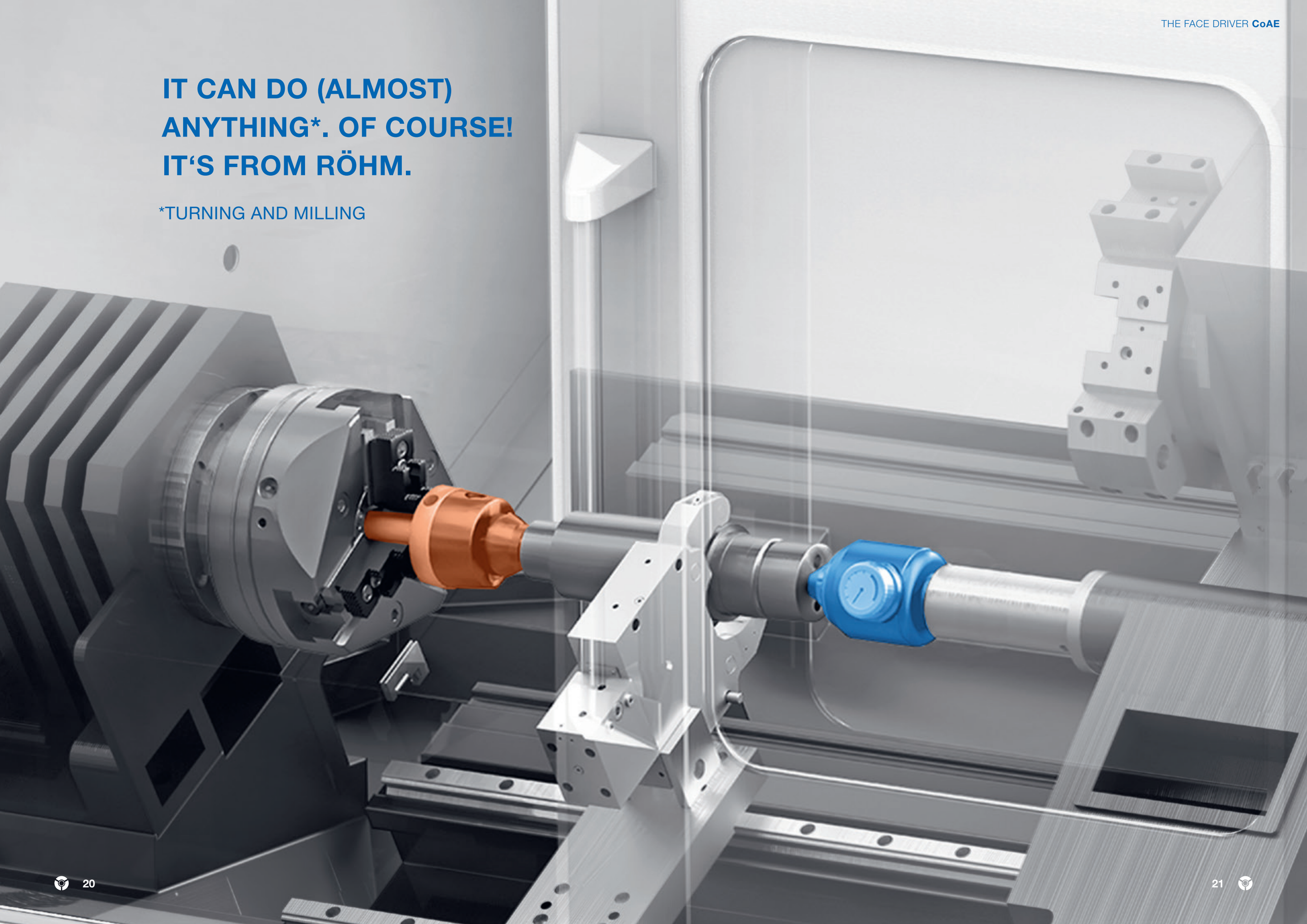

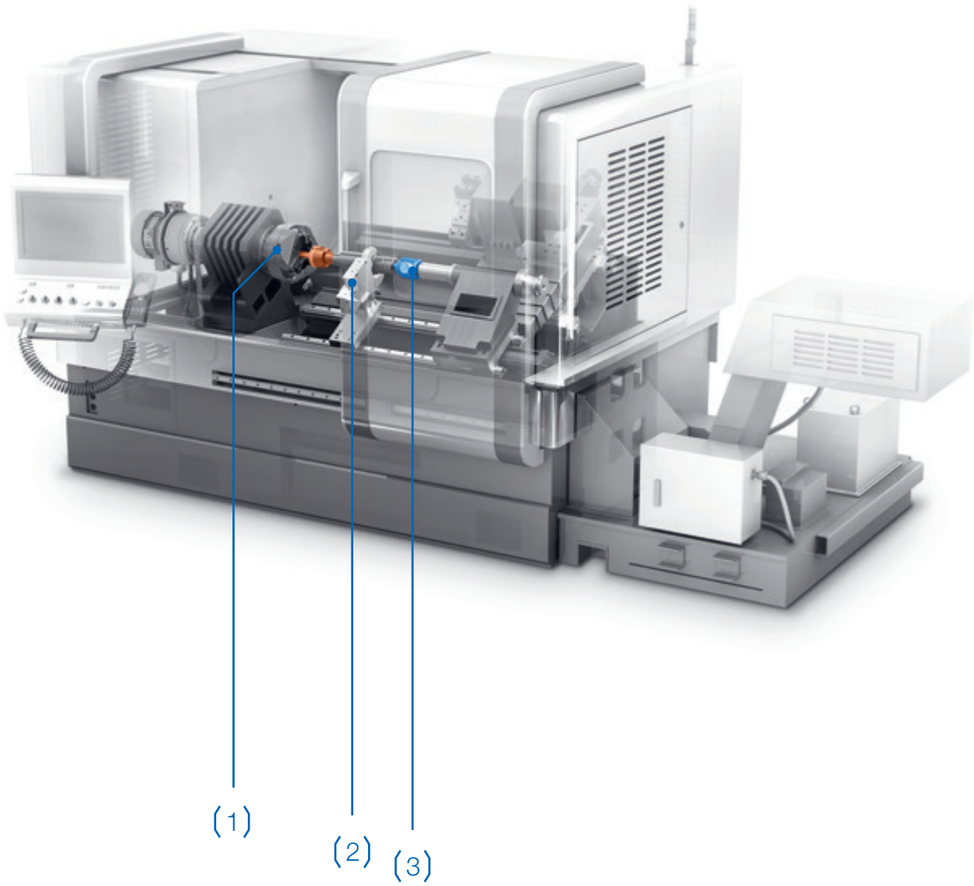


You can conveniently buy clamping and gripping technology from Röhm in our online shop 24/7:

**eshop247.roehm.biz**

# YOU NEED THE WHOLE SYSTEM ...

The CoAE face driver is an essential element when clamping on your machine tool. However, precision clamping can still call for other components – in any case a matching center when clamping with face drivers. We have the complete system for this.

(1)

... to clamp face drivers with a cylindrical mount. There are manually-operated chucks from Röhm for this.

(2)

... to support long turned parts for maximum accuracy. There are self-centering steady rests from Röhm for this.

(3)

... to clamp on the opposite side with a center.

... to clamp tools for milling. There are HSK and SK clamping sets from Röhm for this.

... equip your material handling robots with one of Röhm's grippers and swiveling units.

# PERHAPS YOU NEED SOMETHING A BIT DIFFERENT ...

No question about it: We have been setting standards for years with our face drivers, and the new CoAE will set the bar even higher. But perhaps you have requirements that can be covered better with a special solution. Maybe because you have other requirements of the geometries to be machined. Or, there are other boundary conditions due to the number of units you have to manufacture. In any case, we at Rohm have the right clamping solution. That's a promise.

… because you don't want to machine your parts over the entire length, or because you will simply cut off the clamped end after machining. There is the DURO-T chuck, for example, from Röhm for this. This manual chuck is equipped with a quick jaw change system.

… because you don't want to machine your parts over the entire length, but don't want to damage the surface when clamping. There are collets with chucks for external clamping for this from Röhm.

… because you would like to turn between centers but don't want to transfer any torque that is too high. There is a broad selection of centers for this from Röhm.

RÖHM GmbH ∘ Heinrich-Roehm-Straße 50 ∘ 89567 Sontheim/Brenz ∘ Deutschland
TEL +49 7325 16 0 ∘ FAX +49 7325 16 510 ∘ info@roehm.biz ∘ roehm.biz

Id.-Nr. 1395002 / 0521