GTB SERIES

Globoidal (Roller Gear) Servo Positioner | Table of Contents

Features:

Destaco's **CAMCO GTB Series** are lightweight, compact, high-accuracy programmable servo positioners.

The exceptional low profile high-torque output design supports the demands of high inertia load applications.

Available in four sizes, the GTB series units are lubricated for life and can be mounted in either horizontal or vertical orientations. The GTB Series feature the largest utility through hole diameter available for its size, making it ideal for space constrained machine applications.

Table of Contents IN-SRV-#

Features & Benefits 2
How to Order 3
Specifications 5
Indexer Sizing 6
GTB40 7
GTB63 10
GTB80 13
GTB100 16

Dimensions and technical information are subject to change without notice

Zero Backlash Roller Gear Cam Mechanism

Innovative roller gear design provides exceptionally smooth motion performance. The globoidal cam and output turret with integrated rollers are a preloaded system that delivers zero backlash for superior accuracy, stiffness and long term durability.

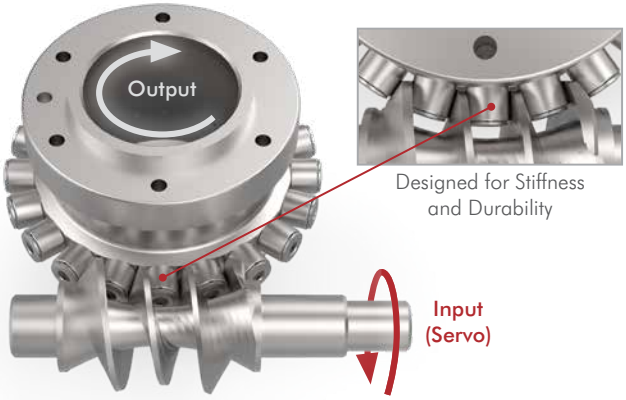

Flexible Drive Options

Each GTB model can be ordered in two different drive options. The high-torque gear drive option is used for applications with large inertia requirements while maintaining a small motor size. The direct drive option provides zero backlash, high precision operation. Both options interface with an array of servo motor suppliers.

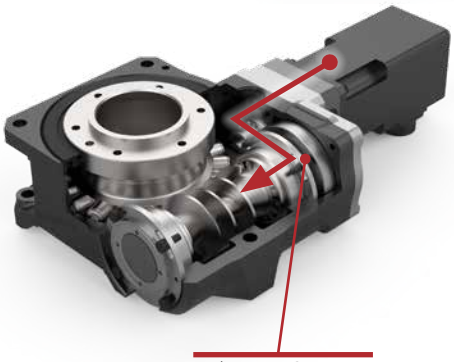

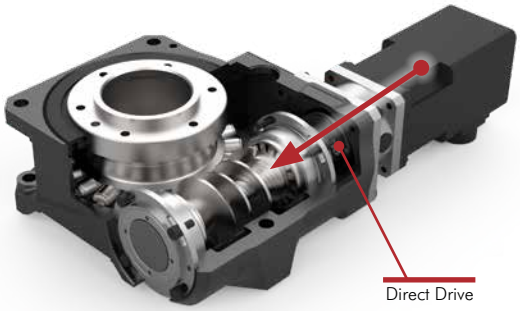

Orientation Independent Mounting

GTB Series units can mounted in any orientation for easy installation and machine standardization.

Install units in any configuration:

- Flat horizontal table mounting
- Vertical mounting
- Trunnion Mounting
- Inverted (upside down) mounting

Trunnion Mount

Table Mount

GTB SERIES

Globoidal (Roller Gear) Servo Positioner | How To Order

GTB Series: How To Order

Globoidal (Roller Gear) Servo Positioner Base Unit

GTB Series units can be interfaced with wide variety of servo motor manufacturers. Use the MI code tables to identify the supported motors for each GTB unit. The MI code specifies the motor adapter plate that provides direct easy motor mounting to the GTB servo positioner.

The -H option for independent mounting orientation comes standard with every GTB series unit. The -T option for precision dial plate locating dowel hole and -B option for precision mounting dowel holes are also provided as standard.

GTB Series without motor installed

Easily Integrates with a Variety of Servo Motor Manufacturers

Allen Bradley	Mitsubishi
AMK	Panasonic
Mitsubishi	Sanyo
FANUC	SEW
Keyence	Siemens
KUKA	Yaskawa

Base Model — **Motor Interface (MI)** (Pre-installed motor adapter plates. See individual datasheets)

GTB ( ) - ( ) - H - TB

Size	Supported Gear Ratios
40	45:1 15:1
63	60:1 20:1
80	60:1 20:1
100	60:1 20:1

Standard Features

H	Orientation independent mounting. Supports vertical, horizontal, trunnion applications
T	Single output flange surface dowel hole for precision dial plate locating
B	Precision placement housing dowel holes, 2 on top of unit, 2 on bottom of unit

Units are available in two different gear ratios based on Direct or Geared motor coupling. Contact Sales to determine what motors are supported for precision direct drive applications and geared drive high torque configurations.

Gear Drive:
High Inertia Applications
45:1 GTB40
60:1GTB63, GTB80, GTB100

Direct Drive:
Zero Backlash Precision Applications
15:1 GTB40
20:1 GTB63, GTB80, GTB100

GTB Series: How to Order configured System (Allen Bradley only)

Servo Positioner Configured Systems

GTB Series units can be interfaced with wide variety of servo motor manufacturers. Use the MI code table to identify the supported motors for each GTB unit.

GTB series are also offered as a configured system when selecting Allen Bradley servo motors. The Allen Bradley servo motor will be installed to the GTB unit and shipped as a complete assembly. The GTB series and motor combinations are a matched pair that supports a variety of servo positioning rotary table applications. To use one of the configured systems you must verify the application requirements are within the operating parameters of the GTB unit and motor combination.

GTB Series with
Allen Bradley Motor Installed*

Base Model

Allen Bradley Configured Systems Motor Interface (MI)
(See Allen Bradley configured systems table below)

Motor Selection
(See Allen Bradley configured systems table below for motor compatibility)

GTB ( ) - ( ) - **H** - **TB** - ( )

VPL-B0632
VPL-B0631
VPL-B0633
VPL-B1002
VPL-B0753
VPL-B1153

Size	Supported Gear Ratios
40	45:1 15:1
63	60:1 20:1
80	60:1 20:1
100	60:1 20:1

Standard Features

H	Orientation independent mounting. Supports vertical, horizontal, trunion applications
T	Single output flange surface dowel hole for precision dial plate locating
B	Precision placement housing dowel holes, 2 on top of unit, 2 on bottom of unit

Allen Bradley Configured Systems

Size	Base Part #	Allen Bradley MI Code #	Motor Coupling	Gear Ratio	Motor Vendor	Allen Bradley Motor Part #	Motor Frame mm [in]	Flange size mm [in]	Shaft Ø mm [in]
40	GTB40	FDG20	Direct	15:1	Allen Bradley	**VPL-B0632**	60 [2.36]	63 [2.48]	9 [0.35]
	GTB40	FGC20	Geared	45:1		**VPL-B0631**			
63	GTB63	GDP20	Direct	20:1		**VPL-B0633**			
	GTB63	GGC22	Geared	60:1		**VPL-B0632**			
80	GTB80	HDP20	Direct	20:1		**VPL-B1002**	100 [3.94]	100 [3.94]	16 [0.63]
	GTB80	HGD24	Geared	60:1		**VPL-B0753**	80 [3.15]	75 [2.95]	11 [0.43]
100	GTB100	JDG20	Direct	20:1		**VPL-B1153**	100 [3.94]	115 [4.53]	19 [0.75]
	GTB100	JGE27	Geared	60:1					

* = Servo Positioner units are assembled, tested and shipped with the above recommended motor for best performance.

GTB SERIES

Globoidal (Roller Gear) Servo Positioner | Specifications

High Torque Gear Drive:
High Inertia Application

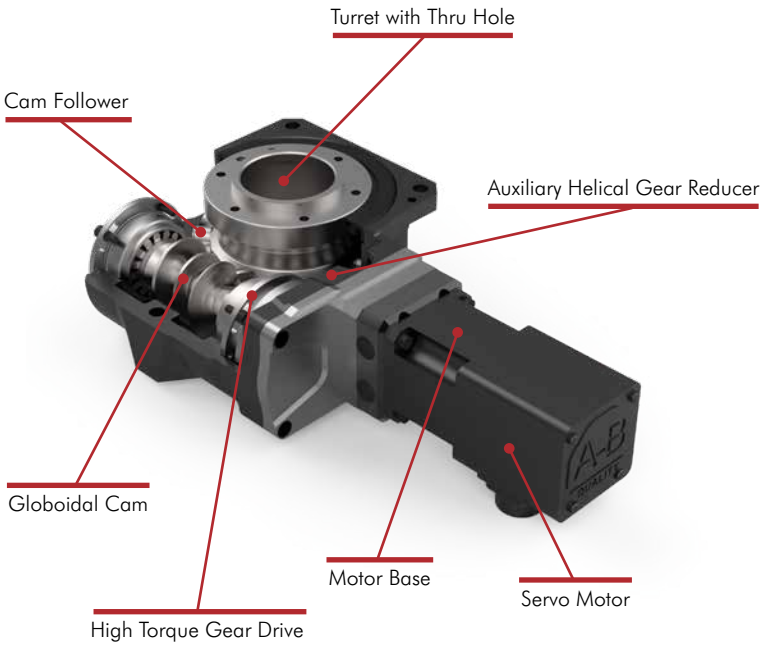

Direct Drive:
Zero Backlash Precision Applications

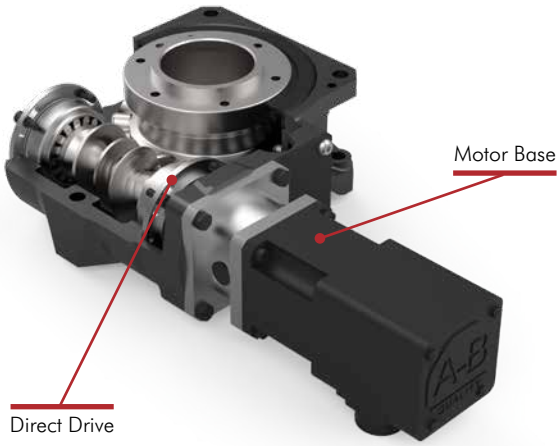

NOTE:
Motor brake must be applied for applications with gravity torque acting on output table (trunnion mounting) in the case of power loss.
Follow the instruction manual for fitting and installing motor. Improper handling can cause damage or product malfunction.

General Specifications	Symbol	Units	GTB40		GTB63		GTB80		GTB100	
Motor Coupling			Direct	Geared	Direct	Geared	Direct	Geared	Direct	Geared
Constant lead ratio			15:1	45:1	20:1	60:1	20:1	60:1	20:1	60:1
Center distance		mm [in]	40 [1.57]		63 [2.48]		80 [3.15]		100 [3.94]	
Through hole diameter	Ø	mm [in]	25 [0.98]		50 [1.97]		75 [2.95]		85 [3.35]	
Accuracy		arc-sec	90 $^{\pm 45}$		60 $^{\pm 30}$		40 $^{\pm 20}$		40 $^{\pm 20}$	
Repeatablility		arc-sec	20 $^{\pm 10}$		14 $^{\pm 7}$		10 $^{\pm 5}$		10 $^{\pm 5}$	
Allowable static torque	T_s	N-m [in-lb]	176 [1558]		411 [3637]		600 [5310]		1341 [11868]	
Max start / stop torque	T_u	N-m [in-lb]	94 [832]		210 [1859]		307 [2717]		880 [7789]	
Allow. mean output speed	N_m	rpm	86		55		50		45	
Allow. ultimate output speed	N_u	rpm	100		70		60		50	
Allow. axial cap. on output	P_a	N [lbs]	1100 [247]		1850 [416]		3632 [816]		4100 [922]	
Allow. radial cap. on output	P_r	N [lbs]	740 [166]		1500 [337]		3100 [697]		3420 [769]	
Allow. moment cap. on output	P_{moment}	N-m [in-lb]	40 [354]		85 [752]		226 [2000]		313 [2770]	
Inertia moment on input axis	J	[lb-ft^2] x 10^{-4} kg-m^2 x 10^{-4}	[6.24] 0.263	[4.03] 0.17	[20.67] 0.871	[9.49] 0.4	[76.27] 3.214	[36.07] 1.52	[246.55] 10.39	[96.82] 4.08
Backlash		arc-sec	0	25	0	15	0	15	0	10
Average efficiency		%	90	80	90	80	90	80	90	80
Lubrication (Maint. Free)			Grease		Grease		Grease		Grease	
Weight		[lbm] kg	[7.28] 3.3	[7.72] 3.5	[13.01] 5.9	[13.67] 6.2	[28.44] 12.9	[31.09] 14.1	[53.58] 24.3	[55.57] 25.2

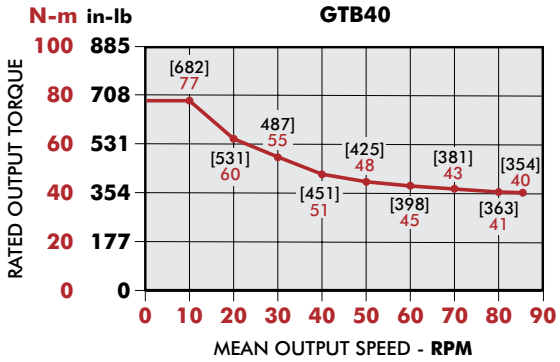

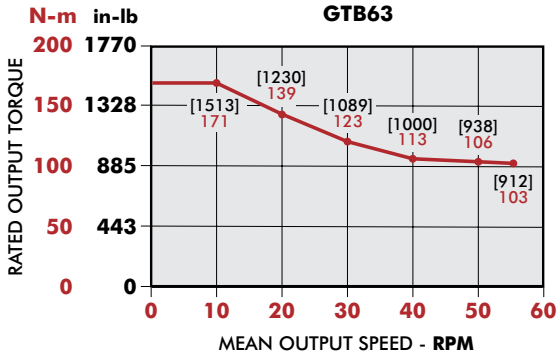

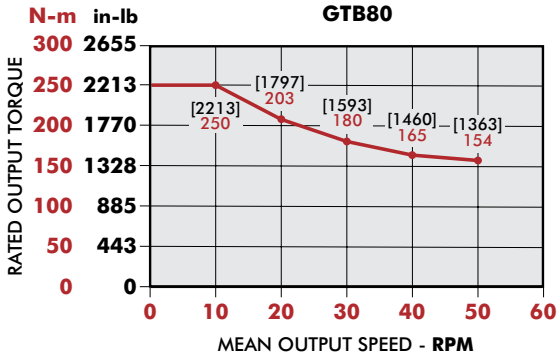

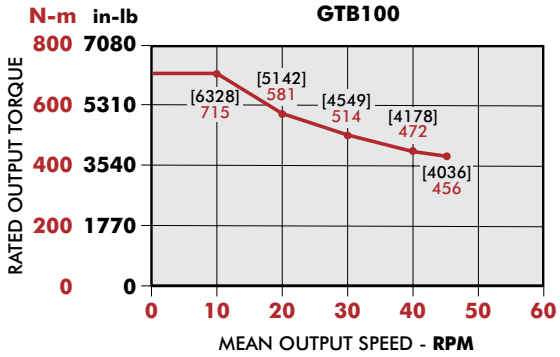

Sizing GTB Series for an Application

(Contact Destaco for sizing application support)

1. Load diagram

Check motion profile and resultant inertia torque. (Add working torque if applied).

Start and stop speed can be simplified to average speed within a segment.

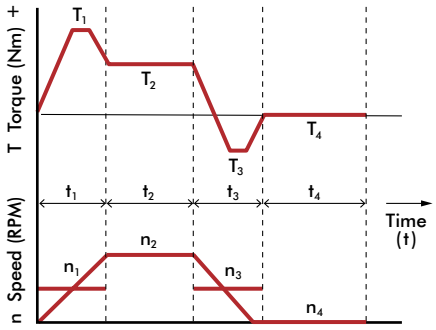

2. Check key conditions

Mean torque T_{mean} $\sqrt[\frac{10}{3}]{\dfrac{n_1 \cdot t_1 \cdot |T_1|^{\frac{10}{3}} + n_2 \cdot t_2 \cdot |T_2|^{\frac{10}{3}} \cdots + n_n \cdot t_n \cdot |T_n|^{\frac{10}{3}}}{n_1 \cdot t_1 + n_2 \cdot t_2 \cdots + n_n \cdot t_n}}$ (N-m)

Mean output speed $n_{mean} = \dfrac{n_1 \cdot t_1 + n_2 \cdot t_2 \cdots + n_n \cdot t_n}{t_1 + t_2 + \cdots + t_n}$ (rpm)

Max output speed n_{max} (rpm)

3. Pre-selection

Choose a size that meets these criteria.

T_{mean} < Maximum rated output torque (N-m)

n_{mean} < Allowable mean output speed Nm (rpm)

n_{max} < Allowable ultimate output speed Nu (rpm)

4. Check specifications

Start/stop torque T_1 < Maximum rated output torque (N-m)
T_3 < Maximum rated output torque (N-m)

Operation condition factor

Smooth without any impact or sudden load	f =1.0
Normal, but occasional emergency stop	f =1.5
Operation with frequent impact or sudden load	f =3.0

Estimated lifetime $L_h = 12000 \left(\frac{T_{op}}{f \cdot T_{mean}}\right)^{\frac{10}{3}}$ (hours)

5. Selection complete

If above values don't satisfy requirements, go back to step 2 and 3 to re-select size.

GTB40 SERIES

Globoidal (Roller Gear) Servo Positioner | Dimensions

GTB40-FG (Motor Frame Size ☐ = 38 [1.50], 40 [1.57])

Gear Drive: High Inertia Applications: Ratio 45:1

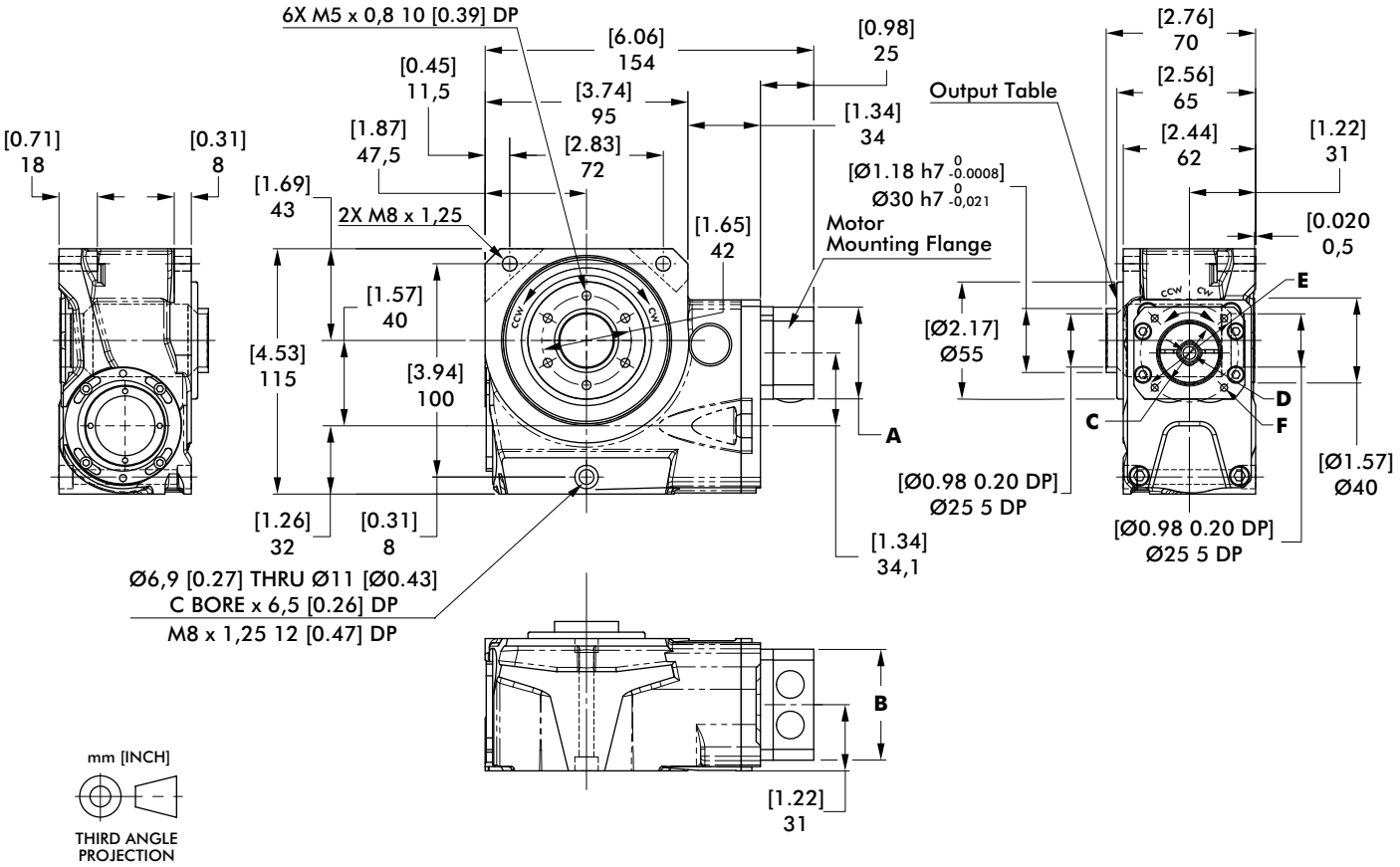

Input/Output Rotation: CW/CCW

MI CODE	A Width mm [in]	B Height mm [in]	C Pilot Ø x Depth mm [in]	D Shaft Ø mm [in]	E Fixing Holes PCD mm [in]	F Fixing Holes Qty x Size mm [in]
FGA20	43 [1.69]	52 [2.05]	Ø30 [1.18] x 4 [0.16]	8 [0.31]	46 [1.81]	4X M4 x 11,5 [0.45] DEEP
FGB20					45 [1.77]	4X M3 x 8,5 [0.33] DEEP
FGC20	55 [2.17]	55 [2.17]	Ø40 [1.57] x 3 [0.12]	9 [0.35]	63 [2.48]	4X M5 X 14 [0.55] DEEP
FGD20						4X M4 X 11,5 [0.45] DEEP

Dimensions and technical information are subject to change without notice

GTB40 SERIES

Globoidal (Roller Gear) Servo Positioner | Dimensions

GTB40-FD (Motor Frame Size □ = 60 [2.37])

Direct Drive: Zero Backlash Precision Applications: Ratio 15:1

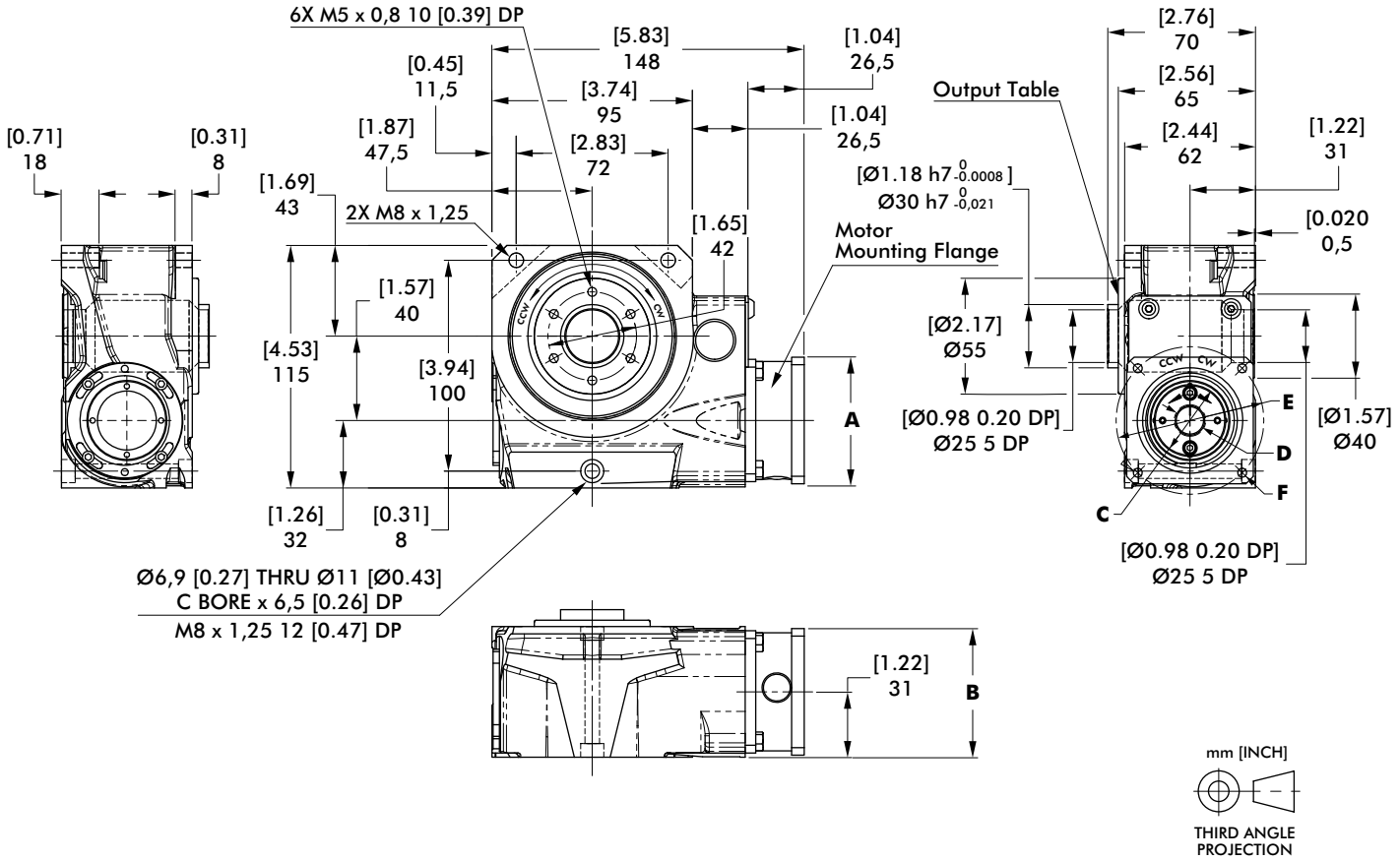

Input/Output Rotation: CW/CCW

MI CODE	A Width mm [in]	B Height mm [in]	C Pilot Ø x Depth mm [in]	D Shaft Ø mm [in]	E Fixing Holes PCD mm [in]	F Fixing Holes Qty x Size mm [in]
FDA20	60 [2.36]	60 [2.36]	Ø50 [1.97] x 4 [0.16]	Ø14 [0.55]	Ø70 [2.76]	4X M5 THRU
FDB20						
FDC20				Ø11 [0.43]		4X M4 THRU
FDD20				Ø14 [0.55]		
FDE20				Ø9 [0.35]		4X M5 THRU
FDF20				Ø12 [0.47]		
FDG20	55 [2.17]	55 [2.17]	Ø40 [1.57] x 4 [0.16]	Ø9 [0.35]	Ø63 [2.48]	
FDH20	70 [2.76]	70 [2.76]	Ø60 [2.36] x 2,5 [0.10]	Ø11 [0.43]	Ø75 [2.95]	
FDJ20	55 [2.17]	55 [2.17]	Ø40 [1.57] x 4 [0.16]	Ø9 [0.35]	Ø63 [2.48]	4X M4 THRU
FDK20	90 [3.54]	90 [3.54]	Ø80 [3.15] X 4 [0.16]	Ø16 [0.63]	Ø100 [3.94]	4X M6 THRU

GTB40 SERIES

Globoidal (Roller Gear) Servo Positioner | Dimensions

GTB40 Option Specifications

Dowel Hole Option **-B**, Housing **-T**: Output Table

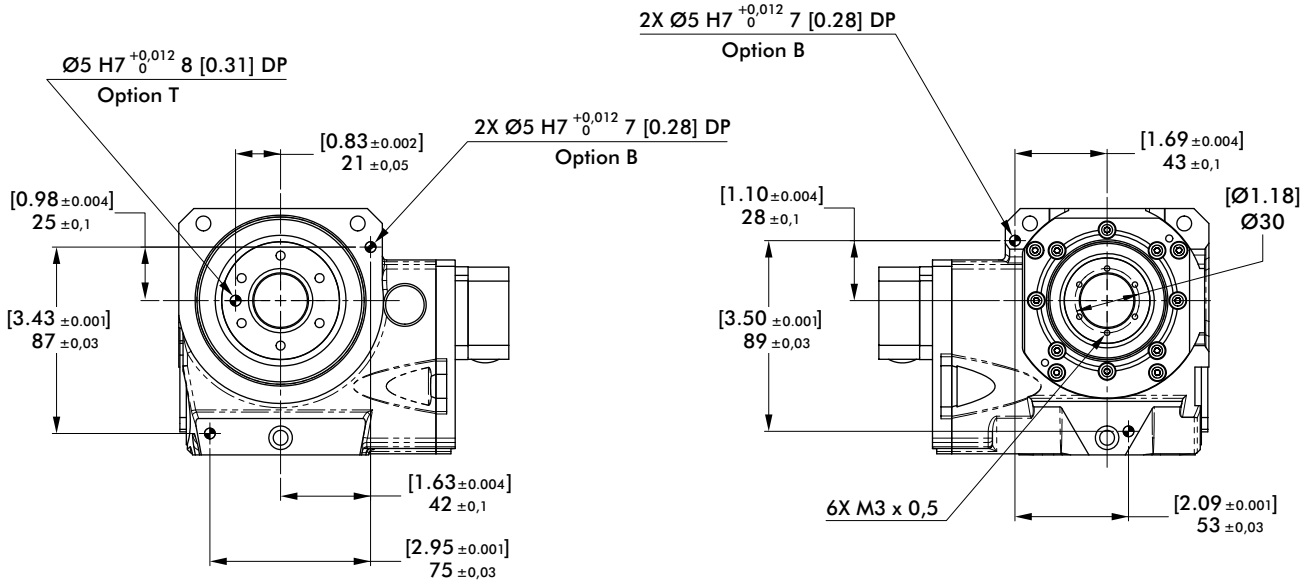

GTB63 SERIES

Globoidal (Roller Gear) Servo Positioner | Dimensions

GTB-63-GG (Motor Frame Size □ = 60 [2.37])

Gear Drive: High Inertia applications: Ratio 60:1

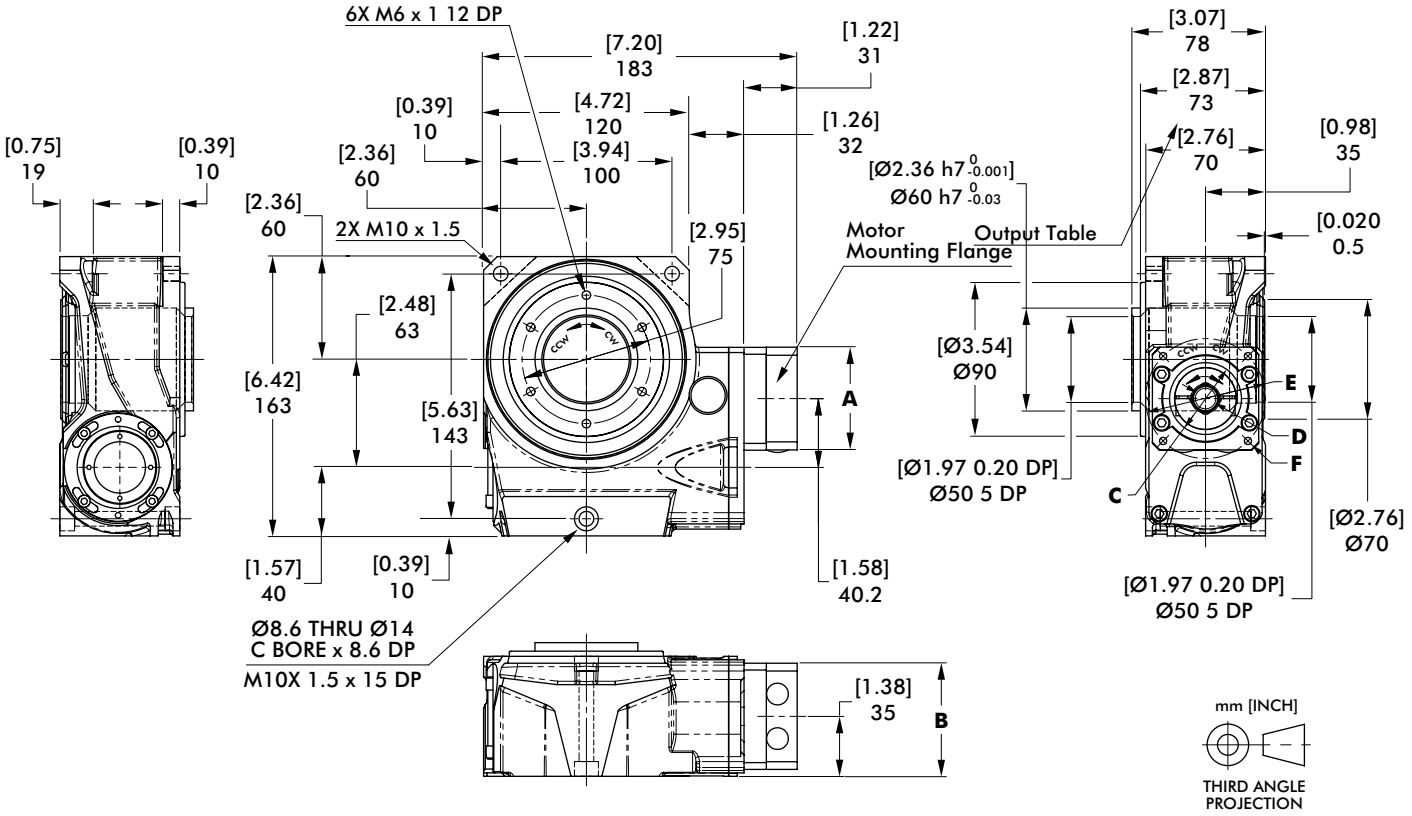

Input/Output Rotation: CW/CCW

MI CODE	A Width mm [in]	B Height mm [in]	C Pilot Ø x Depth mm [in]	D Shaft Ø mm [in]	E Fixing Holes PCD mm [in]	F Fixing Holes Qty x Size mm [in]
GGA20	60 [2.36]	62 [2.44]	Ø50 [1.97] x 5 [0.20]	Ø14 [0.55]	Ø70 [2.76]	4X M5 x 14 [0.55] Deep
GGA22				Ø9 [0.35]		
GGB20				Ø14 [0.55]		4X M4 x 10 [0.39] Deep
GGB21				Ø11 [0.43]		
GGC22			Ø40 [1.57] x 3 [0.12]	Ø9 [0.35]	Ø63 [2.48]	4X M5 x 14 [0.55] Deep
GGD23			Ø50 [1.97] x 5 [0.20]	Ø12 [0.47]	Ø70 [2.76]	
GGE24	70 [2.76]	70 [2.76]	Ø60 [2.36] x 5 [0.20]	Ø11 [0.43]	Ø75 [2.95]	
GGF22	60 [2.36]	62 [2.44]	Ø40 [1.57] x 3 [0.12]	Ø9 [0.35]	Ø63 [2.48]	4X M4 x 11,5 [0.45] Deep
GGG20	70 [2.76]	70 [2.76]	Ø60 [2.36] x 5 [0.20]	Ø14 [0.55]	Ø75 [2.95]	4X M6 x 16 [0.63] Deep

GTB63 SERIES

Globoidal (Roller Gear) Servo Positioner | Dimensions

GTB63-GD (Motor Frame Size ☐ = 60 [2.36], 80 [3.15], 86 [3.39], 90 [3.54])

Direct Drive: Ratio 20:1

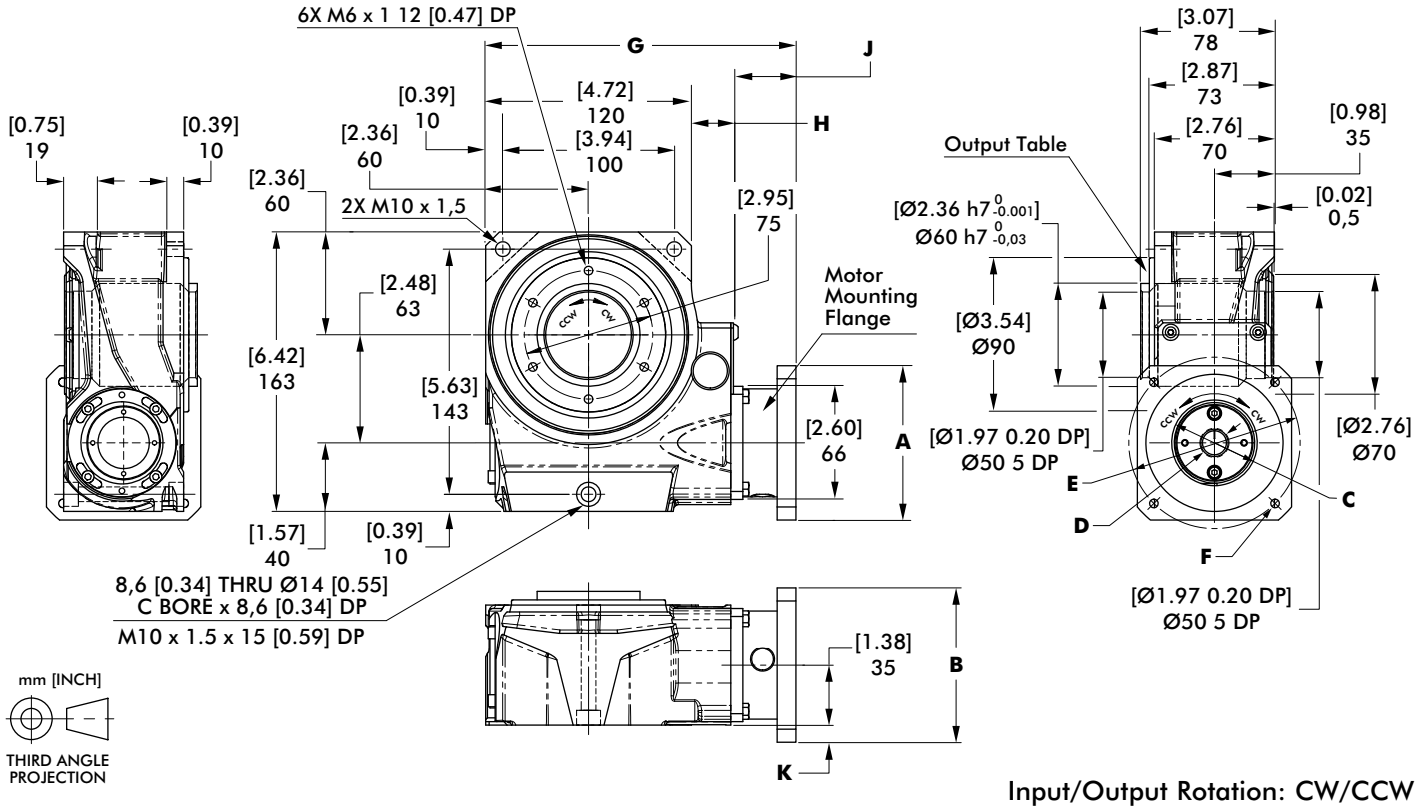

Input/Output Rotation: CW/CCW

MI CODE	A Width mm [in]	B Height mm [in]	C Pilot Ø x Depth mm [in]	D Shaft Ø mm [in]	E Fixing Holes PCD mm [in]	F Fixing Holes Qty x Size mm [in]
GDA20	60 [2.36]	60 [2.36]	Ø50 [1.97] x 4 [0.16]	Ø14 [0.55]	Ø70 [2.76]	4X M5 THRU
GDB20	80 [3.15]	80 [3.15]	Ø70 [2.76] x 4 [0.16]	Ø19 [0.75]	Ø90 [3.54]	4X M6 THRU
GDC20	90 [3.54]	90 [3.54]	Ø80 [3.15] x 6 [0.24]	Ø14 [0.55]	Ø100 [3.94]	
GDD20				Ø16 [0.63]		
GDE20						
GDF20	60 [2.36]	60 [2.36]	Ø50 [1.97] x 4 [0.16]	Ø14 [0.55]	Ø70 [2.76]	4X M4 THRU
GDG20	80 [3.15]	80 [3.15]	Ø70 [2.76] x 4 [0.16]	Ø19 [0.75]	Ø90 [3.54]	4X M5 THRU
GDH20				Ø14 [0.55]		
GDJ20				Ø16 [0.63]		4X M6 THRU
GDK20	90 [3.54]	90 [3.54]	Ø80 [3.15] x 6 [0.24]	Ø10 [0.39]	Ø100 [3.94]	
GDL20	60 [2.36]	60 [2.36]	Ø50 [1.97] x 4 [0.16]	Ø12 [0.47]	Ø70 [2.76]	4X M5 THRU
GDM20	80 [3.15]	80 [3.15]	Ø70 [2.76] x 4 [0.16]	Ø16 [0.63]	Ø90 [3.54]	4X M6 THRU
GDN20	72 [2.83]	72 [2.83]	Ø60 [2.36] x 4 [0.16]	Ø14 [0.55]	Ø75 [2.95]	
GDP20	55 [2.17]	55 [2.17]	Ø40 [1.57] x 5 [0.20]	Ø9 [0.35]	Ø63 [2.48]	4X M5 THRU
GDQ20	70 [2.76]	70 [2.76]	Ø60 [2.36] x 4 [0.16]	Ø11 [0.43]	Ø75 [2.95]	
GDR20						

60

80

86/90

Frame Size	G	H	J	K
60	178 [7.01]	24,5 [0.96]	33,5 [1.32]	--
80	180 [7.09]		35,5 [1.40]	5 [0.20]
86	181 [7.13]		36,5 [1.44]	10 [0.39]
90				

Dimensions and technical information are subject to change without notice

GTB63 Option Specifications

Dowel Hole Option **-B**, Housing **-T**: Output Table

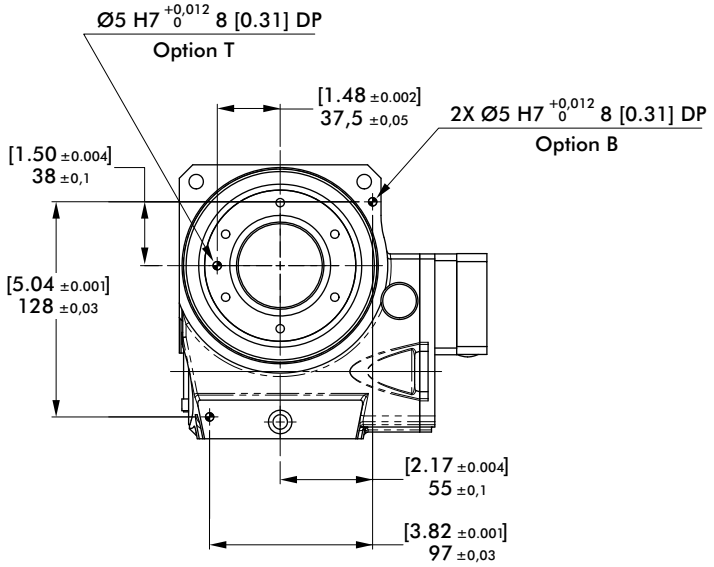

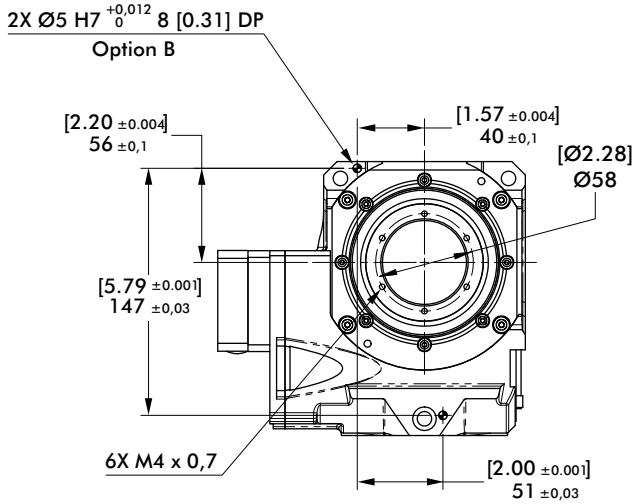

GTB80 SERIES

Globoidal (Roller Gear) Servo Positioner | Dimensions

GTB80-HG (Motor Frame Size ☐ = 80 [3.15], 86 [3.39], 90 [3.54])

Gear Drive: High Inertia Applications: Ratio 60:1

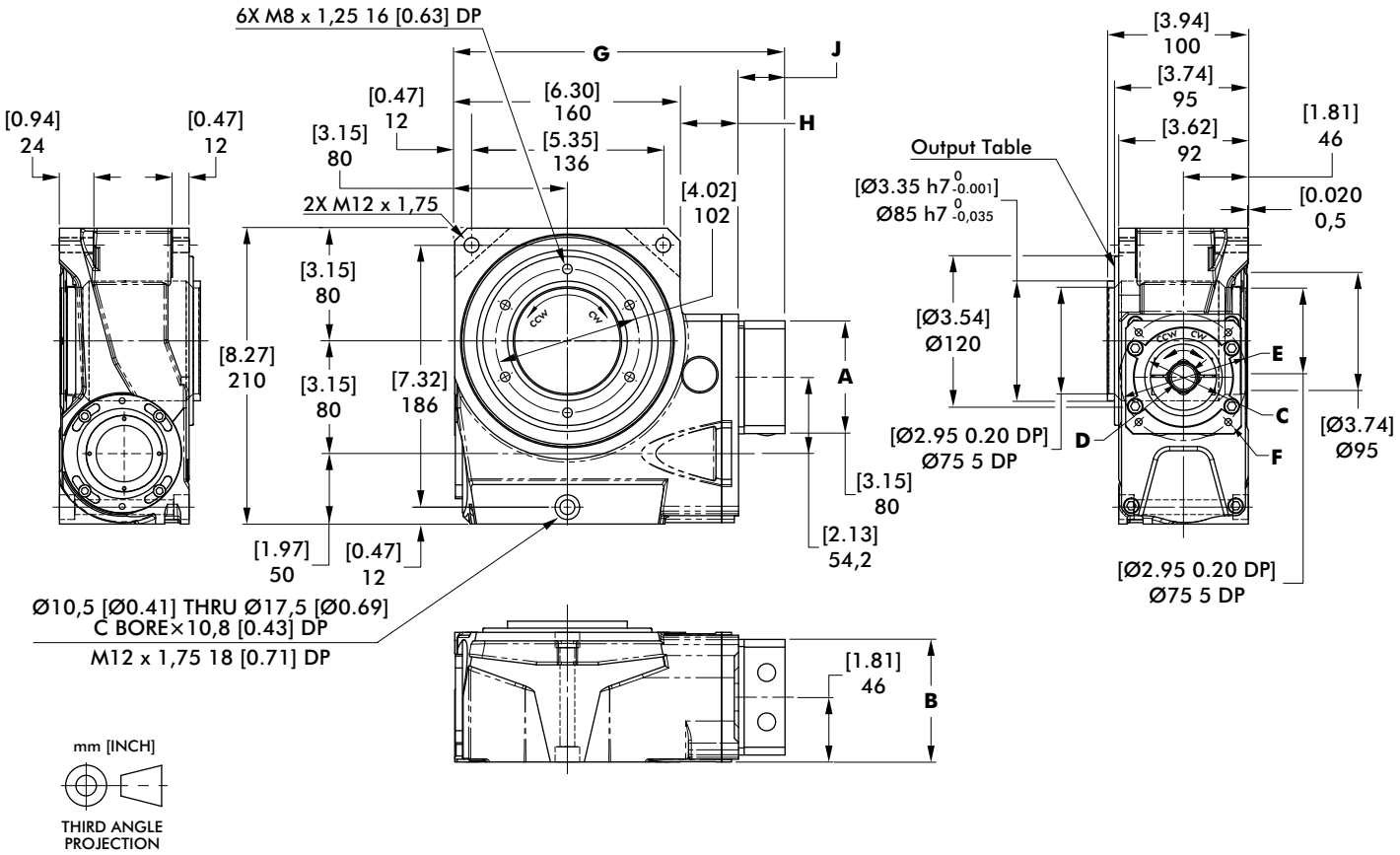

Input/Output Rotation: CW/CCW

MI CODE	A Width mm [in]	B Height mm [in]	C Pilot Ø x Depth mm [in]	D Shaft Ø mm [in]	E Fixing Holes PCD mm [in]	F Fixing Holes Qty x Size mm [in]
HGA20	80 [3.15]	82 [3.23]	Ø70 [2.76] x 4,5 [0.18]	Ø19 [0.75]	Ø90 [3.54]	4X M6 THRU
HGA22				Ø16 [0.63]		4X M6 x 17 [0.67] DEEP
HGB21	90 [3.54]	88 [3.46]	Ø80 [3.15] x 7 [0.28]	Ø14 [0.55]	Ø100 [3.94]	
HGB22				Ø16 [0.63]		4X M6 THRU
HGB23				Ø10 [0.39]		4X M6 x 17 [0.67] DEEP
HGC20	80 [3.15]	82 [3.23]	Ø70 [2.76] x 4,5 [0.18]	Ø19 [0.75]	Ø90 [3.54]	4X M5 x 14 [0.55] DEEP
HGD24			Ø60 [2.36] x 3 [0.12]	Ø11 [0.43]	Ø75 [2.95]	
HGE22			Ø70 [2.76] x 4,5 [0.18]	Ø16 [0.63]	Ø90 [3.54]	4X M6 THRU
HGF25			Ø60 [2.36] x 4 [0.16]	Ø14 [0.55]	Ø75 [2.95]	
HGG26	90 [3.54]	88 [3.46]	Ø80 [3.15] x 4 [0.16]	Ø16 [0.63]	Ø100 [3.94]	
HGG25				Ø14 [0.55]		4X M6 x 15 [0.59] DEEP
HGH20	98 [3.86]	98 [3.86]	Ø95 [3.74] x 4 [0.16]	Ø19 [0.75]	Ø115 [4.53]	4X M8 x 22,5 [0.89] DEEP

80

86/90

Frame Size	G	H	J
80	234 [9.21]	41,5 [1.63]	33 [1.30]
86	241 [9.49]	45,5 [1.79]	35,5 [1.40]
90			

Dimensions and technical information are subject to change without notice

GTB80-HD (Motor Frame Size □ = 80 [3.15], 86 [3.39], 90 [3.54], 100 [3.94])

Direct Drive: Zero Backlash Precision Applications: Ratio 20:1

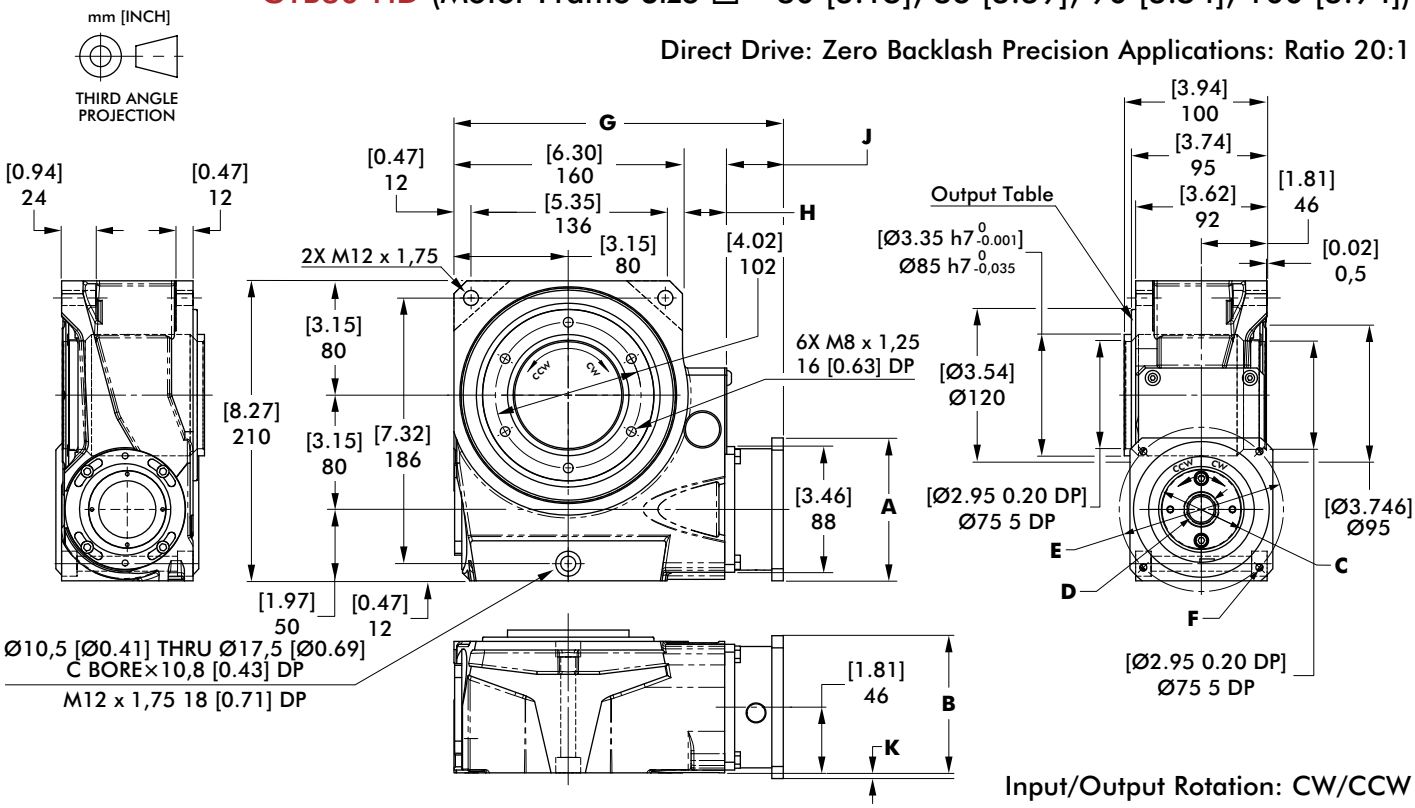

Input/Output Rotation: CW/CCW

MI CODE	A Width mm [in]	B Height mm [in]	C Pilot Ø x Depth mm [in]	D Shaft Ø mm [in]	E Fixing Holes PCD mm [in]	F Fixing Holes Qty x Size mm [in]
HDA20	80 [3.15]	80 [3.15]	Ø70 [2.76] x 4,5 [0.18]	Ø19 [0.75]	Ø90 [3.54]	4X M6 THRU
HDB20	90 [3.54]	90 [3.54]	Ø80 [3.15] x 5,5 [0.22]	Ø14 [0.55]	Ø100 [3.94]	
HDC20				Ø16 [0.63]		
HDD20	100 [3.94]	100 [3.94]	Ø95 [3.74] x 3,5 [0.14]	Ø24 [0.94]	Ø115 [4.53]	
HDE20	80 [3.15]	80 [3.15]	Ø70 [2.76] x 4,5 [0.18]	Ø19 [0.75]	Ø90 [3.54]	4X M5 THRU
HDF20	100 [3.94]	100 [3.94]	Ø95 [3.74] x 3,5 [0.14]		Ø115 [4.53]	4X M8 THRU
HDG20			Ø95 [3.74] x 7,5 [0.30]			
HDH20	80 [3.15]	80 [3.15]	Ø70 [2.76] x 4,5 [0.18]	Ø16 [0.63]	Ø90 [3.54]	4X M6 THRU
HDJ20	90 [3.54]	90 [3.54]	Ø80 [3.15] x 5,5 [0.22]		Ø100 [3.94]	
HDK20	100 [3.94]	100 [3.94]	Ø95 [3.74] x 3,5 [0.14]	Ø22 [0.87]	Ø115 [4.53]	4X M8 THRU
HDL20	90 [3.54]	90 [3.54]	Ø80 [3.15] x 5,5 [0.22]	Ø10 [0.39]	Ø100 [3.94]	4X M6 THRU
HDM20	100 [3.94]	100 [3.94]	Ø95 [3.74] x 7,5 [0.30]	Ø22 [0.87]	Ø115 [4.53]	4X M8 THRU
HDN20	96 [3.78]	96 [3.78]	Ø80 [3.15] x 4 [0.16]	Ø19 [0.75]	Ø100 [3.94]	4X M6 THRU
HDP20	90 [3.54]	90 [3.54]	Ø80 [3.15] x 3,5 [0.14]	Ø16 [0.63]		4X M3 THRU
HDQ20	100 [3.94]	100 [3.94]	Ø95 [3.74] x 3,5 [0.14]	Ø19 [0.75]	Ø115 [4.53]	4X M8 THRU
HDR20	90 [3.54]	90 [3.54]	Ø80 [3.15] x 3,5 [0.14]	Ø14 [0.55]	Ø100 [3.94]	4X M6 THRU
HDS20						
HDT20	114 [4.49]	114 [4.49]	Ø110 [4.33] x 4 [0.16]	Ø24 [0.94]	Ø130 [5.12]	4X M8 THRU

60

86/90

100

Frame Size	G	H	J	K
80	226,5 [8.92]	31 [1.22]	35,5 [1.40]	--
86	230,5 [9.07]		39,5 [1.56]	
90				
100				4 [0.16]

GTB80 SERIES

Globoidal (Roller Gear) Servo Positioner | Dimensions

GTB80 Option Specifications

Dowel Hole Option **-B**, Housing **-T**: Output Table

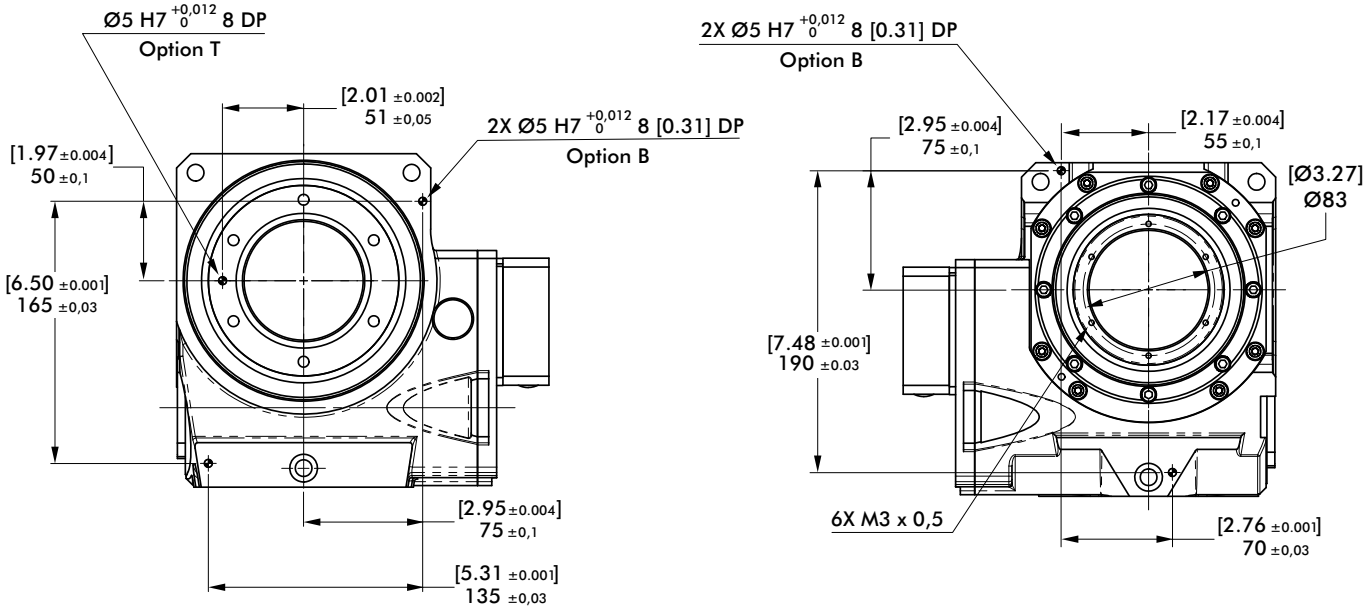

Dimensions and technical information are subject to change without notice

GTB100-JG (Motor Frame Size □ = 90 [3.54], 100 [3.94], 130 [5.12])

Gear Drive: High Inertia applications: Ratio 60:1

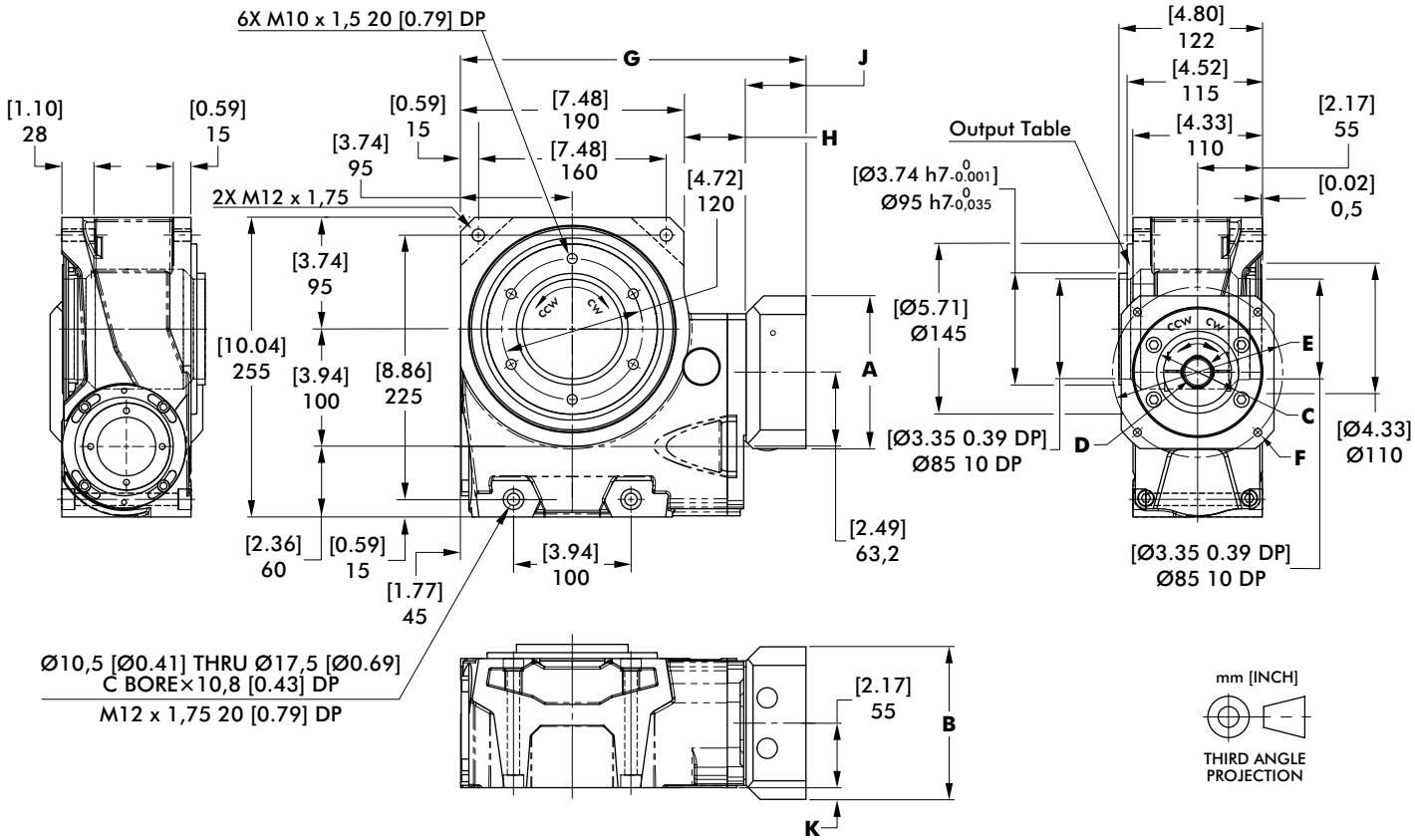

Input/Output Rotation: CW/CCW

MI CODE	A Width mm [in]	B Height mm [in]	C Pilot Ø x Depth mm [in]	D Shaft Ø mm [in]	E Fixing Holes PCD mm [in]	F Fixing Holes Qty x Size mm [in]
JGA2O	130 [5.12]	130 [5.12]	Ø110 [4.33] x 7 [0.28]	Ø24 [0.94]	Ø145 [5.71]	4X M8 x 22,5 [0.89] Deep
JGA21				Ø19 [0.75]		
JGA22				Ø22 [0.87]		
JGB23	90 [3.54]	90 [3.54]	Ø80 [3.15] x 9,5 [0.37]	Ø14 [0.55]	Ø100 [3.94]	4X M6 x 17 [0.67] Deep
JGB24				Ø16 [0.63]		
JGB25				Ø10 [0.39]		
JGC20	100 [3.94]	100 [3.94]	Ø95 [3.74] x 5,5 [0.22]	Ø24 [0.94]	Ø115 [4.53]	
JGD26	90 [3.54]	90 [3.54]	Ø80 [3.15] x 9,5 [0.37]	Ø16 [0.63]	Ø100 [3.94]	
JGE22	100 [3.94]	100 [3.94]	Ø95 [3.74] x 7,5 [0.30]	Ø22 [0.87]	Ø115 [4.53]	4X M8 x 22,5 [0.89] Deep
JGE27				Ø19 [0.75]		
JGF27	96 [3.78]	96 [3.78]	Ø80 [3.15] x 5 [0.20]		Ø100 [3.94]	4X M6 x 17 [0.67] Deep
JGG20	114 [4.49]	114 [4.49]	Ø110 [4.33] x 3,5 [0.14]	Ø24 [0.94]	Ø130 [5.12]	4X M8 x 22,5 [0.89] Deep

90

100

130

Frame Size	G	H	J	K
90	280 [11.02]	51 [2.01]	39 [1.54]	--
100	281 [11.06]	53 [2.09]	38 [1.50]	
130	280 [11.02]		51 [2.01]	10 [0.39]

GTB100 SERIES

Globoidal (Roller Gear) Servo Positioner | Dimensions

GTB100-JD (Motor Frame Size ☐ = 100 [3.94], 130 [5.12])

Direct Drive: Zero Backlash Precision Applications: Ratio 20:1

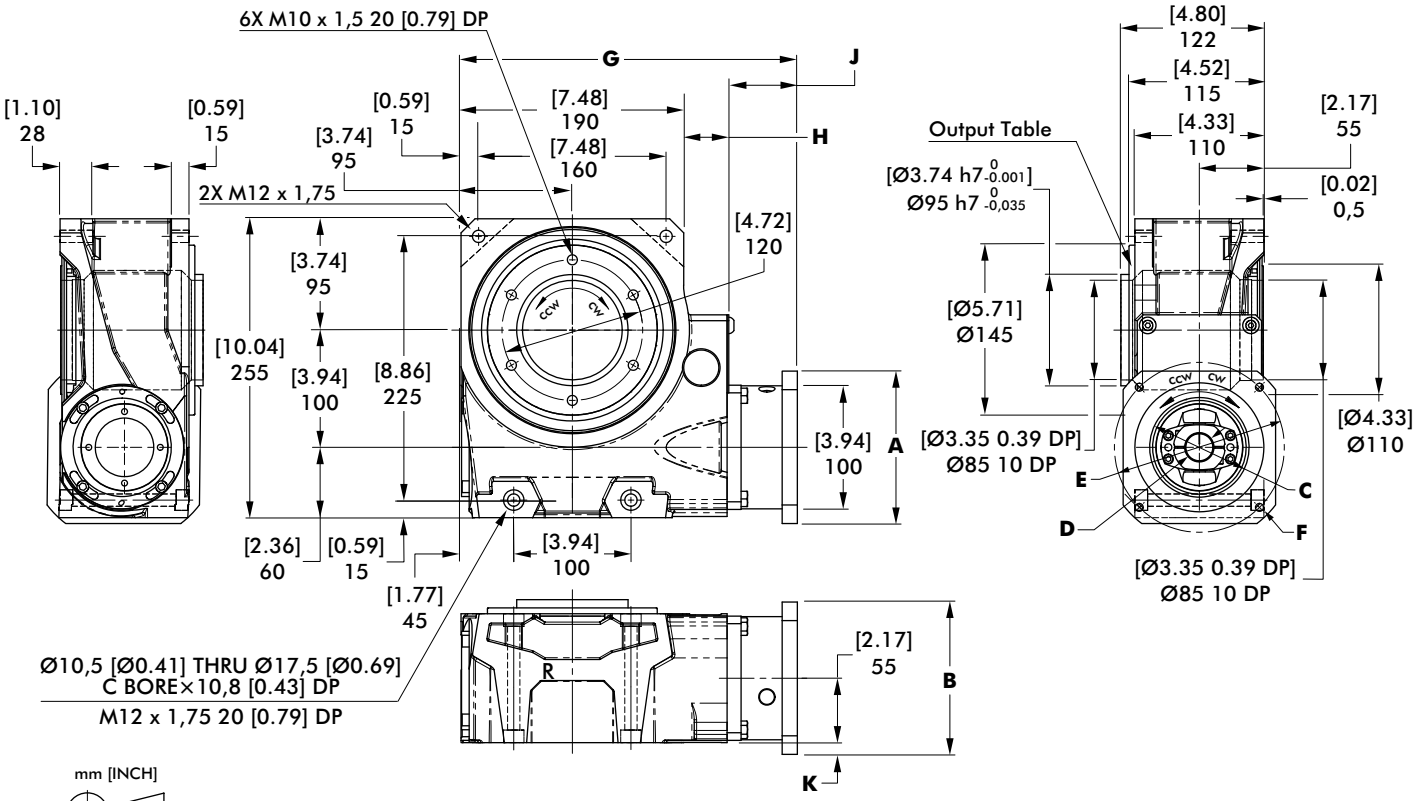

mm [INCH]

THIRD ANGLE PROJECTION

Input/Output Rotation: CW/CCW

MI CODE	A Width mm [in]	B Height mm [in]	C Pilot Ø x Depth mm [in]	D Shaft Ø mm [in]	E Fixing Holes PCD mm [in]	F Fixing Holes Qty x Size mm [in]
JDA20	130 [5.12]	130 [5.12]	Ø110 [4.33] x 6,5 [0.26]	Ø19 [0.75]	Ø145 [5.71]	4X M8 THRU
JDB20				Ø22 [0.87]		
JDC20				Ø24 [0.94]		
JDD20	100 [3.94]	100 [3.94]	Ø95 [3.74] x 5,5 [0.22]		Ø115 [4.53]	4X M6 THRU
JDE20			Ø95 [3.74] x 7,5 [0.22]	Ø22 [0.87]		4X M8 THRU
JDF20	126 [4.96]	126 [4.96]	Ø110 [4.33] x 4,5 [0.18]	Ø24 [0.94]	Ø130 [5.12]	
JDG20	100 [3.94]	100 [3.94]	Ø95 [3.74] x 3,5 [0.14]	Ø19 [0.75]	Ø115 [4.53]	
JDH20	114 [4.49]	114 [4.49]	Ø110 [4.33] x 3,5 [0.14]	Ø24 [0.94]	Ø130 [5.12]	
JDJ20	100 [3.94]	100 [3.94]	Ø95 [3.74] x 3,5 [0.14]	Ø19 [0.75]	Ø115 [4.53]	
JDK20	114 [4.49]	114 [4.49]	Ø110 [4.33] x 3,5 [0.14]	Ø24 [0.94]	Ø130 [5.12]	
JDL20	126 [4.96]	126 [4.96]	Ø110 [4.33] x 4,5 [0.18]	Ø19 [0.75]		

90

130

Frame Size	G	H	J	K
100	284 [11.18]	38,5 [1.52]	55,5 [2.19]	--
130	287 [11.30]		58,5 [2.30]	10 [0.39]

Dimensions and technical information are subject to change without notice

GTB100 Option Specifications
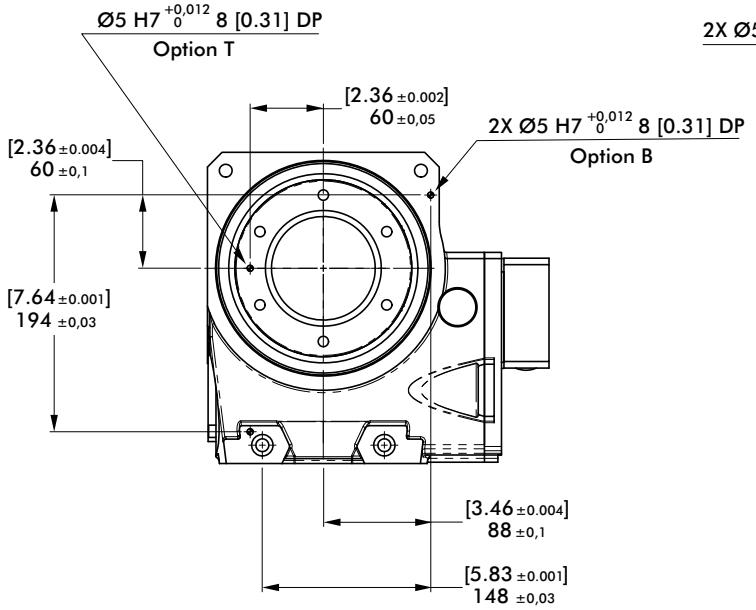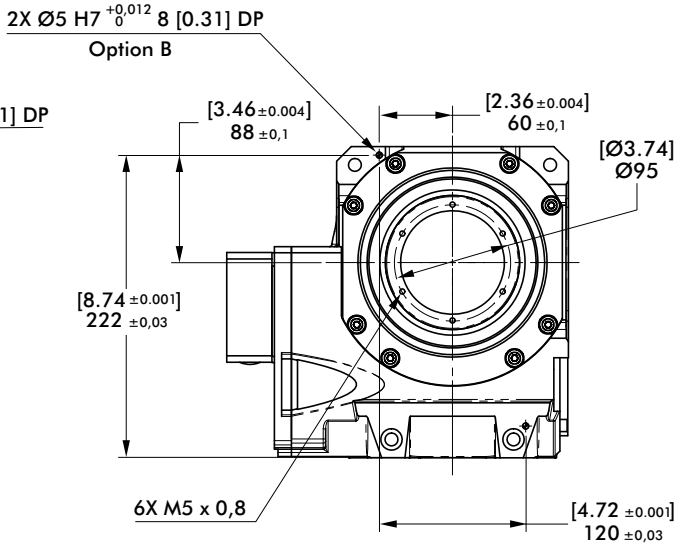
Dowel Hole Option **-B**, Housing **-T**: Output Table