VERTICAL HOLD DOWN CLAMPS

Sizing and Application Chart

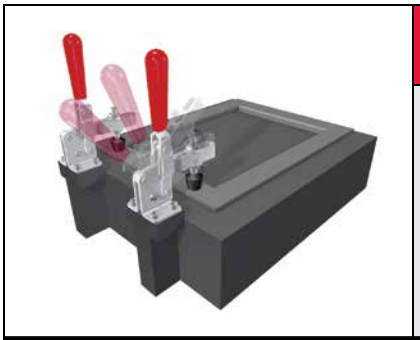

Series	Page: MC-VHD-#	Max. Holding Capacity N [lbf.]							Height Under Clamping Bar mm [inch]							Overall Height mm [inch]									
		0 to 1000 [0 to 225]	1000 to 2000 [225 to 450]	2000 to 3000 [450 to 675]	3000 to 5000 [675 to 1125]	5000 to 7000 [1125 to 1575]	7000 to 10000 [1575 to 2250]	10000+ [2250+]	0 to 25 [0 to 0.98]	25 to 40 [0.98 to 1.57]	40 to 55 [1.57 to 2.17]	55 to 70 [2.17 to 2.76]	70 to 85 [2.76 to 3.35]	85 to 100 [3.35 to 3.94]	100+ [3.94+]	0 to 50 [0 to 1.97]	50 to 100 [1.97 to 3.94]	100 to 125 [3.94 to 4.92]	125 to 150 [4.92 to 5.91]	150 to 175 [5.91 to 6.89]	175 to 200 [6.89 to 7.87]	200 to 225 [7.87 to 8.86]	225 to 250 [8.86 to 9.84]	250 to 275 [9.84 to 10.83]	275+ [10.83+]
2002	3			■					■	■								■	■						
2007	7				■					■	■										■				
2010	9					■					■	■											■		
201	11	■							■								■								
202	13	■							■	■							■	■							
207	17		■	■						■								■			■				
210	21			■	■						■	■							■			■	■		
247	23				■						■	■										■	■		
267	23					■							■												■
5905	27				■						■									■					
5910	27						■				■												■		
5915	27							■				■													■
5105	29				■							■								■					
5110	29					■								■								■			
528	31				■						■										■	■			
548/578	32							■				■											■	■	
533/535	33					■					■	■	■									■	■	■	■
558	35							■						■											■
91090	36		■									■									■				
317	37		■									■							■						
527	39				■						■										■				
7-101	40			■						■									■						
7-58	40			■							■										■				
7-59	40				■							■										■			
7-60	40						■					■											■		
229	41				■						■												■		
501	43			■							■	■					■								
503	43					■							■		■			■	■						
505	43							■						■	■				■	■					
506	43							■							■					■		■			

Dimensions and technical information are subject to change without notice

VERTICAL HOLD DOWN CLAMPS

Sizing and Application Chart

Overall Length mm [inch]								Overal Width mm [inch]						Suitable Application Area							Standard Material										
50 to 75 [1.97 to 2.95]	75 to 100 [2.95 to 3.94]	100 to 125 [3.94 to 4.92]	125 to 150 [4.92 to 5.91]	150 to 175 [5.91 to 6.89]	175 to 200 [6.89 to 7.87]	200 to 225 [7.87 to 8.86]	225 to 250 [8.86 to 9.84]	0 to 20 [0 to 0.78]	20 to 40 [0.78 to 1.57]	40 to 60 [1.57 to 2.36]	60 to 80 [2.36 to 3.15]	80 to 100 [3.15 to 3.94]	100+ [3.94+]	Welding	Assembly	Checking Fixtures	Machining	Woodworking	Closures	Food Processing	Duty Cycle	Steel	Stainless Steel	Toggle Lock Plus	Accom. Workpiece Variation	U-Bar Version	Solid Arm Version	Straight Base	Flanged Base	Welded	Normal	Harsh/Dirty
	■	■							■					○	⊙	⊙	●	⊙	⊙	⊗	○	✓		✓		✓	✓	✓	✓		✓	
		■		■					■	■				○	⊙	⊙	●	⊙	⊙	⊗	○	✓		✓		✓	✓	✓	✓		✓	
				■	■				■		■			○	⊙	⊙	●	⊙	⊙	⊗	○	✓		✓		✓	✓	✓	✓		✓	
■								■	■	■				●	⊙	⊙	⊗	⊙	⊙	○	●	✓	✓			✓		✓	✓		✓	
■									■			■		●	⊙	⊙	⊗	⊙	⊙	○	●	✓	✓			✓	✓	✓	✓		✓	
	■	■	■						■	■	■			●	⊙	⊙	●	⊙	⊙	○	○	✓	✓	✓		✓	✓	✓	✓		✓	
			■	■					■		■		■	○	⊙	⊙	●	⊙	○	○	○	✓	✓	✓		✓	✓	✓	✓		✓	
				■							■			○	⊙	⊙	●	⊙	●	⊗	○	✓				✓	✓	✓	✓		✓	
							■					■		○	⊙	⊙	●	○	●	⊗	⊙	✓				✓			✓		✓	
		■							■					⊙	⊙	○	●	●	●	⊗	⊙	✓					✓		✓	✓		✓
				■										⊙	⊙	⊙	●	●	●	⊗	⊙	✓						✓	✓	✓		✓
					■					■				⊙	⊙	○	●	●	●	⊗	⊙	✓					✓		✓	✓		✓
		■							■					⊙	⊙	⊙	●	●	●	⊗	⊙	✓		✓			✓	✓	✓	✓		✓
			■	■					■					⊙	⊙	⊙	●	●	●	⊗	⊙	✓		✓			✓	✓	✓	✓		✓
				■						■				⊙	⊙	○	●	●	●	⊗	⊙	✓					✓		✓	✓		✓
					■	■				■	■			⊙	⊙	⊙	●	●	●	⊗	⊙	✓					✓	✓	✓	✓		✓
			■	■						■	■			⊙	⊙	⊙	●	●	●	⊗	⊙	✓					✓	✓	✓	✓		✓
						■				■				⊙	⊙	●	○	●	●	⊗	⊙	✓					✓	✓		✓	✓	
		■								■				●	⊙	⊙	●	⊙	⊙	○	○	✓				✓			✓		✓	
				■					■					●	⊙	⊙	●	⊙	⊙	○	○	✓				✓	✓	✓	✓		✓	
							■			■				⊙	⊙	○	●	●	●	⊗	⊙	✓					✓		✓	✓		✓
		■								■				⊙	⊙	⊗	○	●	●	⊗	⊙	✓			✓		✓		✓	✓		✓
					■					■				⊙	⊙	⊗	○	●	●	⊗	⊙	✓			✓		✓		✓	✓		✓
					■						■			⊙	⊙	⊗	○	●	●	⊗	⊙	✓			✓		✓		✓	✓		✓
					■						■																					
■									■					⊙	⊙	○	●	●	●	⊗	⊙	✓					✓	✓		✓		✓
	■		■							■				⊙	⊙	○	○	●	●	⊗	⊙	✓					✓	✓		✓		✓
		■		■						■				⊙	⊙	○	○	●	●	⊗	⊙	✓					✓	✓		✓		✓
			■			■					■			⊙	⊙	○	○	●	●	⊗	⊙	✓					✓	✓		✓		✓

● Excellent/High ○ Fair/Medium ● Poor/Low ⊗ Not Recommended

2002 SERIES

Vertical Hold Down Clamps | Product Overview

Features:
- Large hand clearance for improved safety
- Bolt pattern interchangeable with 202 Series
- Three times the holding capacity of 202 Series
- Hardened bushings at key pivot points
- Near vertical clamping contact
- BLK models feature a black, non-reflective finish

Applications:
- Checking fixtures
- Assembly & test
- Light machining
- Woodworking

Also Available:
See page MC-ACC-1 for accessories

Accepts M6 or 1/4 spindle accessories

Covered under one or more U.S./International Patents

2002-U
Flanged Base U-Bar

2002-U-LS-BLK ⓘ
Blackout Series Flanged Base U-Bar

2002-S
Flanged Base Solid Bar

2002-UB
Straight Base U-Bar

2002-UB-LS-BLK ⓘ
Blackout Series Straight Base U-Bar

2002-SB
Straight Base Solid Bar

2002-UR
Flanged Base U-Bar with DESTACO® Toggle Lock Plus

2002-SR ⓘ
Flanged Base Solid Bar with DESTACO® Toggle Lock Plus

2002-UBR
Straight Base U-Bar with DESTACO® Toggle Lock Plus

2002-SBR ⓘ
Straight Base Solid Bar with DESTACO® Toggle Lock Plus

2002-U207
Flanged Base U-Bar Interchangeable with 207 Series

2002-UR207
Flanged Base U-Bar Interchangeable with 207 Series, DESTACO® Toggle Lock Plus

ⓘ This item is available upon request

Dimensions and technical information are subject to change without notice

Model	Max. Holding Capacity	Clamp Bar Open-ing(+10°)	Handle Opening (+10°)	Weight	Accessories (Supplied) Bolt Retainer	Spindle Assembly	Flanged Washers
2002-U	2700 N [600 lbf]	75°	66°	0,22kg [0.48lb]	--	215208-M	215105
2002-U-LS-BLK ⓘ					--	--	215105-BLK
2002-S					2002115-E	--	--
2002-UB					--	215208-M	215105
2002-UB-LS-BLK ⓘ					--	--	215105-BLK
2002-SB					2002115-E	--	--
2002-UR				0,25kg [0.55lb]	--	215208-M	215105
2002-SR ⓘ					2002115-E	--	--
2002-UBR					--	215208-M	215105
2002-SBR ⓘ					2002115-E	--	--
2002-U207		90°	72°	0,26kg [0.57lb]	--	215208-M	215105
2002-UR207		75°	57°				

ⓘ This item is available upon request

Holding Capacities

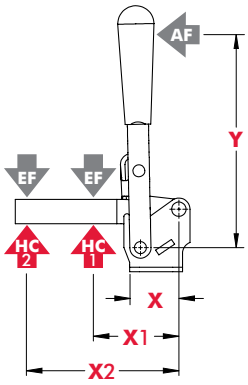

Model	X	X1	X2	Y	‡HC1	‡HC2	‡EF(X1):AF	‡EF(X2):AF
2002-( )	[1.12] 28,5	[1.45] 37	[2.64] 67	[3.66] 93	[600 lbf] 2700N	[295 lbf] 1310N	11:1	5:1

Dimensions shown "mm [inch]" ‡ **HC** = Holding Capacity, **EF** = Exerting Force, **AF** = Applied Force
See page MC-TEC-4 for additional information.

2002 SERIES

Vertical Hold Down Clamps | Dimensions | -U/-S/-UB/-SB/-UR/-SR/-UBR/-SBR

2002-U
Flanged Base
U-Bar

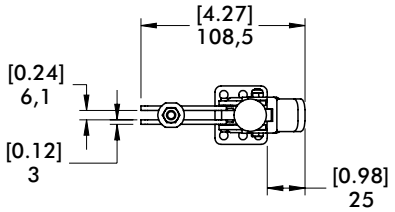

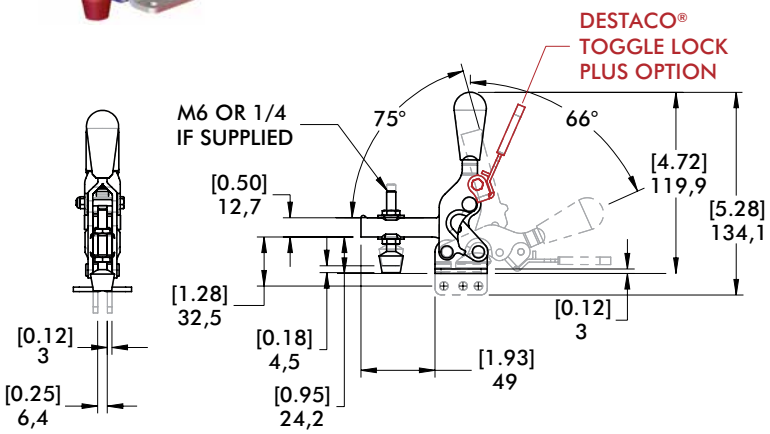

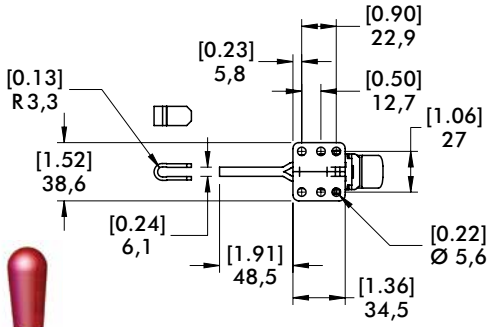

2002-SB
Straight Base
Solid Bar

mm [INCH]

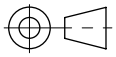

THIRD ANGLE PROJECTION

2002-U207/2002-UR207
with interchangeable Series 207 Mounting Pattern

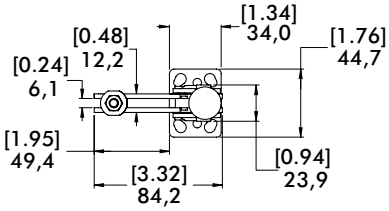

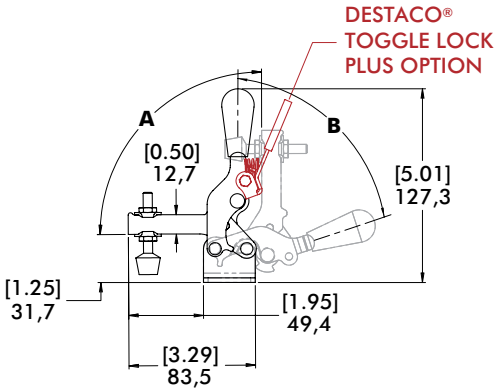

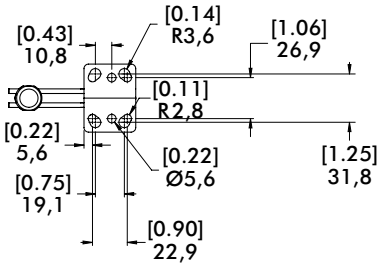

Model	A	B
2002-U-207	90°	72°
2002-UR207	75°	57°

Notes

2007 SERIES

Vertical Hold Down Clamps | Product Overview

Features:
- Large hand clearance for improved safety
- Bolt pattern interchangeable with 207 Series
- Over two times the holding capacity of 207 Series
- Hardened bushings at key pivot points
- Near vertical clamping contact

Covered under one or more U.S./International Patents

Applications:
- Checking fixtures
- Assembly & test
- Light machining
- Woodworking

Also Available:
See page MC-ACC-1 for accessories

Accepts M8 or 5/16 spindle accessories

2007-**U**
Flanged Base
U-Bar

2007-**U**-LS-BLK ⓘ
Blackout Series
Flanged Base
U-Bar

2007-**S**
Flanged Base
Solid Bar

2007-**UB**
Straight Base
U-Bar

2007-**UB**-LS-BLK ⓘ
Blackout Series
Straight Base
U-Bar

2007-**SB**
Straight Base
Solid Bar

2007-**UR**
Flanged Base
U-Bar
with
DESTACO®
Toggle Lock
Plus

2007-**SR** ⓘ
Flanged Base
Solid Bar
with
DESTACO®
Toggle Lock
Plus

2007-**UBR**
Straight Base
U-Bar
with
DESTACO®
Toggle Lock
Plus

2007-**SBR** ⓘ
Straight Base
Solid Bar
with
DESTACO®
Toggle Lock
Plus

Technical Information

Model	Max. Holding Capacity	Clamp Bar Opening (+10°)	Handle Opening (+10°)	Weight	Accessories (Supplied)		
					Bolt Retainer	Spindle Assembly	Flanged Washers
2007-U	4450 N [1000 lbf]	76°	64°	0,54kg [1.20lbs]	--	2007208-M	507107
2007-U-LS-BLK ⓘ					--	--	507107-BLK
2007-S					2007115-E	--	--
2007-UB					--	2007208-M	507107
2007-UB-LS-BLK ⓘ					--	--	507107-BLK
2007-SB					2007115-E	--	--
2007-UR					--	2007208-M	507107
2007-SR ⓘ					2007115-E	--	--
2007-UBR					--	2007208-M	507107
2007-SBR ⓘ					2007115-E	--	--

ⓘ This item is available upon request

Dimensions and technical information are subject to change without notice

Vertical Hold Down Clamps | Holding Capacities

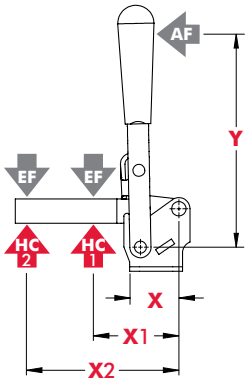

Model	X	X1	X2	Y	‡HC1	‡HC2	‡EF(X1):AF	‡EF(X2):AF
2007-( )	[1.59] 40,5	[1.95] 49,5	[3.92] 99,5	[5.16] 131	[1000lbf.] 4450N	[470lbf.] 2090N	10:1	5.3:1

Dimensions shown "mm [inch]" ‡ **HC** = Holding Capacity, **EF** = Exerting Force, **AF** = Applied Force
See page MC-TEC-4 for additional information.

Dimensions | -U/-S/-UB/-SB/-UR/-SR/-UBR/-SBR

2007-U
Flanged Base
U-Bar

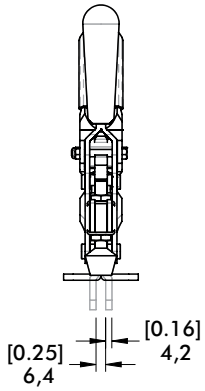

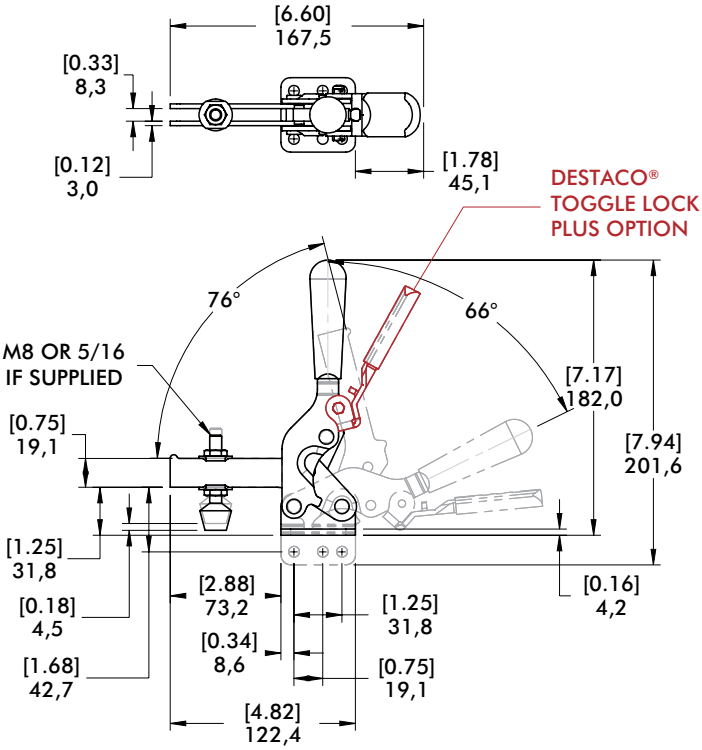

2007-SB
Straight Base
Solid Bar

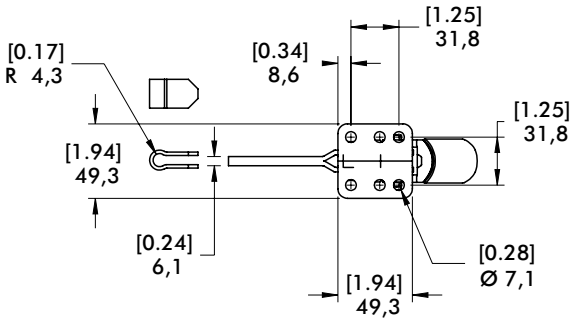

mm [INCH]
THIRD ANGLE PROJECTION

2010 SERIES

Vertical Hold Down Clamps | Product Overview

Features:
- Large hand clearance for improved safety
- Bolt pattern interchangeable with 210 Series
- Over two times the holding capacity of 210 Series
- Hardened bushings at key pivot points
- Near vertical clamping contact

Covered under one or more U.S./International Patents

Applications:
- Checking fixtures
- Assembly & test
- Light machining
- Woodworking

Also Available:
See page MC-ACC-1 for accessories

Accepts M10 or 3/8 spindle accessories

2010-**U**
Flanged Base
U-Bar

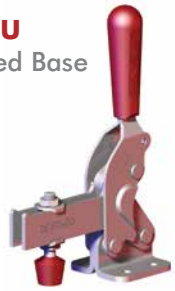

2010-**S**
Flanged Base
Solid Bar

2010-**UB**
Straight Base
U-Bar

2010-**SB**
Straight Base
Solid Bar

2010-**UR**
Flanged Base
U-Bar
with DESTACO®
Toggle Lock Plus

2010-**SR**ⓘ
Flanged Base
Solid Bar
with DESTACO®
Toggle Lock Plus

2010-**UBR**
Straight Base
U-Bar
with DESTACO®
Toggle Lock Plus

2010-**SBR**ⓘ
Straight Base
Solid Bar
with DESTACO®
Toggle Lock Plus

Technical Information

Model	Max. Holding Capacity	Clamp Bar Opening (+10°)	Handle Opening (+10°)	Weight	Accessories (Supplied)		
					Bolt Retainer	Spindle Assembly	Flanged Washers
2010-U	6230 N [1400 lbf]	78°	66°	1,16kg [2.56lbs]	---	240208-M	235106
2010-S					2010115-E	---	---
2010-UB					---	240208-M	235106
2010-SB					2010115-E	---	---
2010-UR					---	240208-M	235106
2010-SRⓘ					2010115-E	---	---
2010-UBR					---	240208-M	235106
2010-SBRⓘ					2010115-E	---	---

ⓘ This item is available upon request

Dimensions and technical information are subject to change without notice

Vertical Hold Down Clamps | Holding Capacities

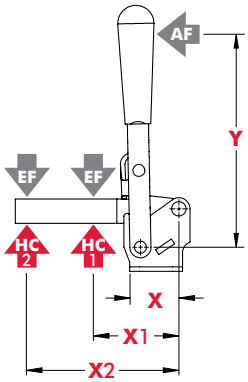

Model	X	X1	X2	Y	‡HC1	‡HC2	‡EF(X1):AF	‡EF(X2):AF
2010-( )	[2.04] 51,8	[2.44] 62	[4.88] 124	[7.00] 178	[1400lbf.] 6230N	[720lbf.] 3200N	13:1	6:1

Dimensions shown "mm [inch]" ‡ **HC** = Holding Capacity, **EF** = Exerting Force, **AF** = Applied Force
See page MC-TEC-4 for additional information.

Dimensions | -U/-S/-UB/-SB/-UR/-SR/-UBR/-SBR

2010-U
Flanged Base
U-Bar

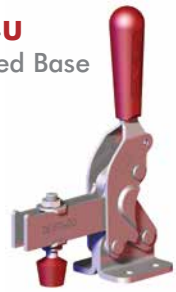

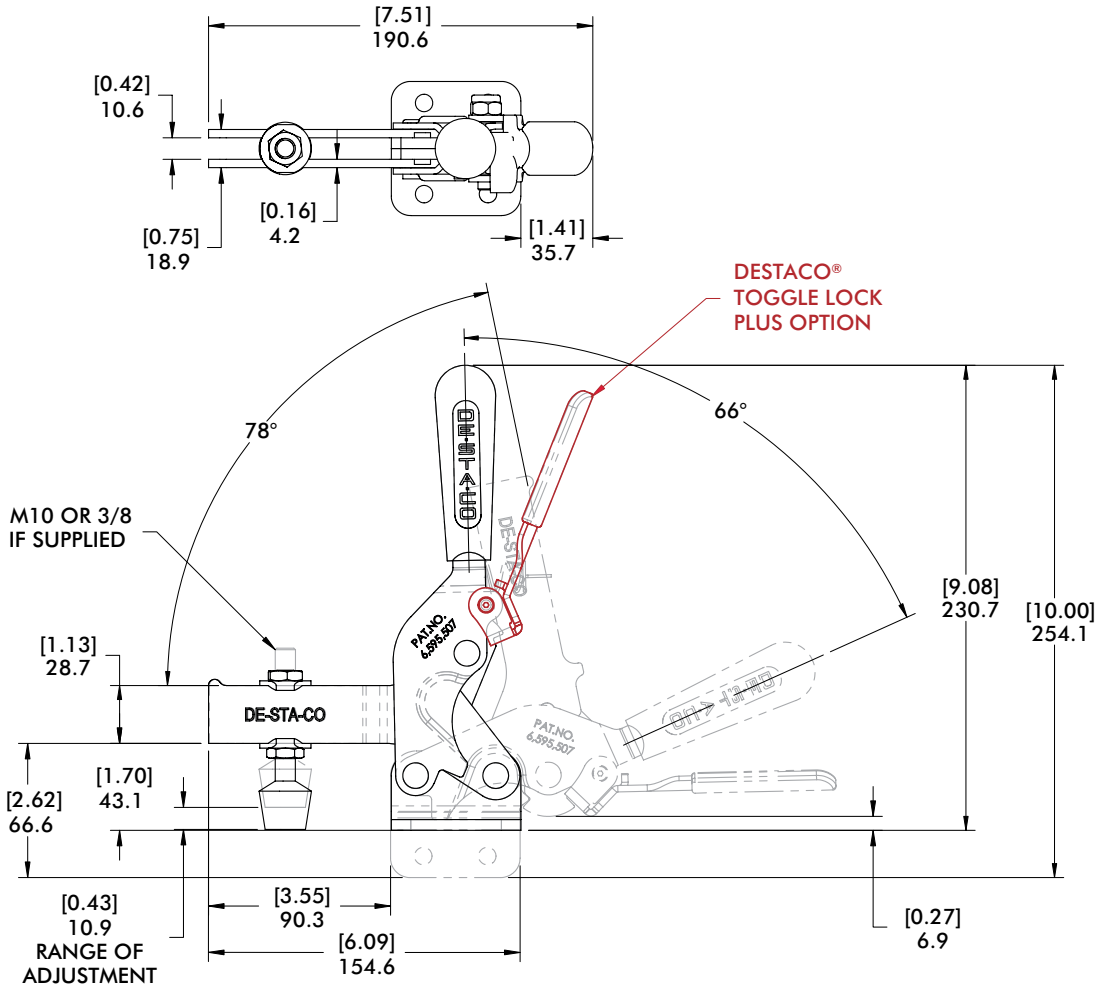

2010-SB
Straight Base
Solid Bar

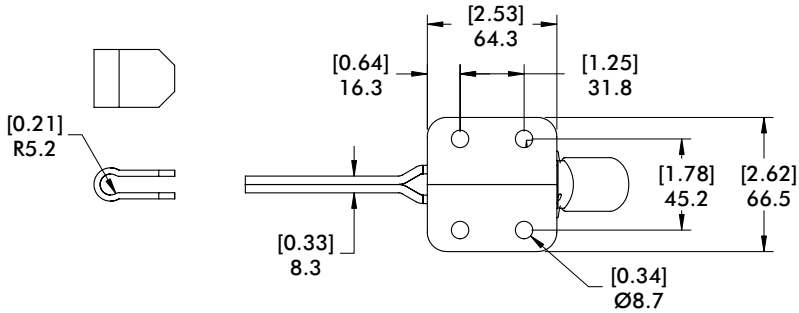

mm [INCH]
THIRD ANGLE PROJECTION

201 SERIES

Vertical Hold Down Clamps | Product Overview

Features:
- Smallest series in the Vertical Handle series
- Stainless steel version available

Applications:
- Checking fixtures
- Assembly & test
- Woodworking

Also Available:
See page MC-ACC-1 for accessories

812-U Pneumatic Toggle Clamp
(See page MC-PTC-3)

201-**U**
Flanged Base
U-Bar

201-**UB**
Straight Base

201-**TU**
Flanged
Base, U-Bar,
T-Handle

201-**USS**
Flanged Base
U-Bar, Stainless
Steel

Technical Information

Model	Max. Holding Capacity	Clamp Bar Opening (+10°)	Handle Opening (+10°)	Weight	Accessories (Supplied)	
					Spindle Assembly	Flanged Washers
201-U	440 N [100 lbf]	100°	55°	0,70kg [0.15lbs]	305208-M	102111
201-UB						
201-TU						
201-USS	560 N [125 lbf]				201943-M	102911

Holding Capacities

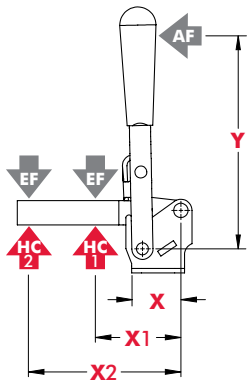

Model	X	X1	X2	Y	‡HC1	‡HC2	‡EF(X1):AF	‡EF(X2):AF
U/UB	[0.87] 22	[1.06] 27	[1.75] 44,5	[2.25] 57	[100lbf.] 440N	[55lbf.] 245N	9:1	6:1
TU				[1.38] 35			8.4:1	4:4:1
USS				[2.25] 57	[125lbf.] 560N	[60lbf.] 270N	9:1	6:1

Dimensions shown "mm [inch]" ‡ **HC** = Holding Capacity, **EF** = Exerting Force, **AF** = Applied Force
See page MC-TEC-4 for additional information.

Dimensions and technical information are subject to change without notice

Vertical Hold Down Clamps | Dimensions | -U/-UB/-TU/-USS

201-U
Flanged Base
U-Bar

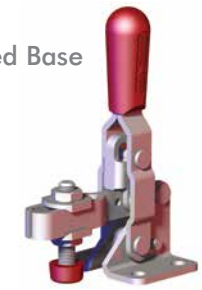

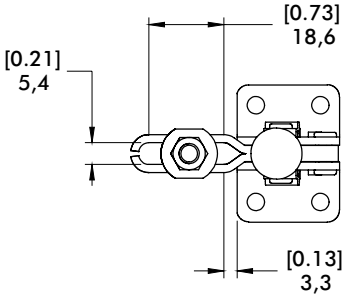

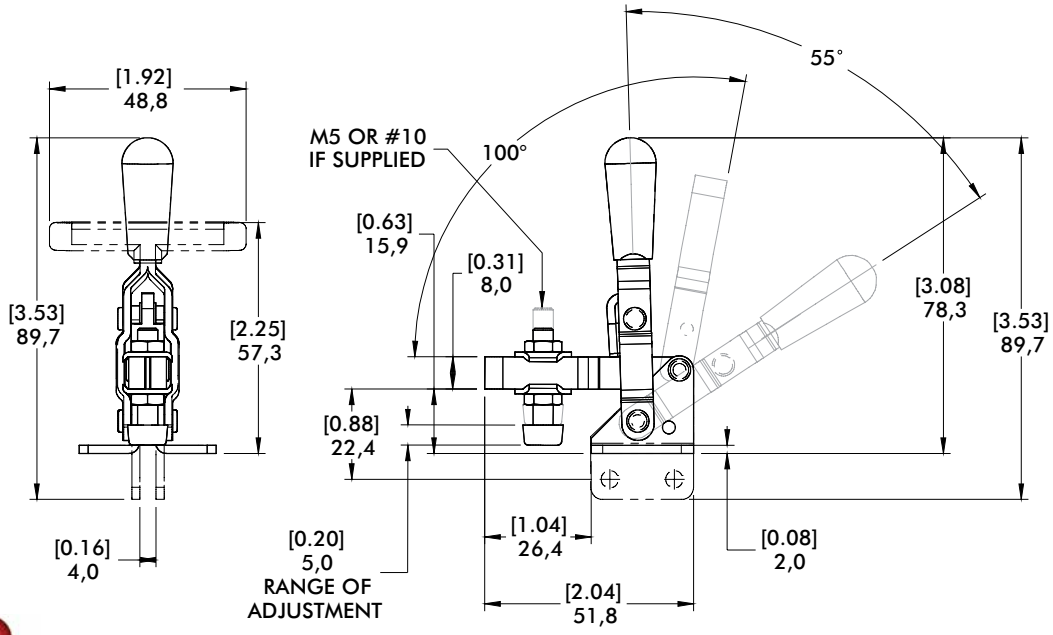

201-UB
Straight Base

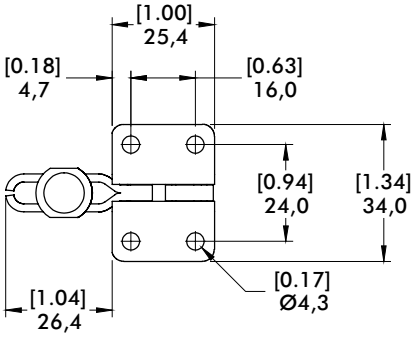

mm [INCH]

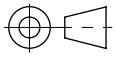

THIRD ANGLE
PROJECTION

202 SERIES

Vertical Hold Down Clamps | Product Overview

Features:
- Two bar styles available
- Low profile T-Handle version available
- Available in stainless steel
- Accommodates M6 or ¼" spindle accessories
- BLK models feature a black, non-reflective finish

Applications:
- Checking fixtures
- Assembly & test
- Light machining
- Woodworking

Also Available:
See page MC-ACC-1 for accessories

802-U Pneumatic Toggle Clamp
(See page MC-PTC-5)

202-U
Flanged Base
U-Bar

202-UL
Flanged Base
Long U-Bar

202-USS
Flanged Base
U-bar, Stain-
less Steel

202
Flange Base
Solid Bar

202-SS
Flanged Base
Solid Bar
Stainless Steel

202-UB
Straight Base
U-bar

202-B
Straight Base
Solid Bar

202-TU
Flanged Base
U-bar,
T-Handle

202-T
Flanged Base
Solid Bar
T-Handle

202-U-Lⓘ
Flanged Base
Open U-Bar

202-U-L-BLKⓘ
Blackout Series
Flanged Base
Open U-Bar

202-UB-Lⓘ
Straight Base
Open U-Bar

202-UB-L-BLKⓘ
Blackout Series
Straight Base
Open U-Bar

202305
Flanged Grip.
Provides added safety
and protection. Fits all
202 Series (except
T-Handle) clamps.
Order separately.

ⓘ This item is available upon request

Dimensions and technical information are subject to change without notice

Vertical Hold Down Clamps | Technical Information

Model	Max. Holding Capacity	Clamp Bar Opening (+10°)	Handle Opening (+10°)	Weight	Accessories (Supplied) Spindle Assembly	Accessories (Supplied) Flanged Washers
202-U	890 N [200 lbf]	105°	65°	0,16kg [0.35lbs]	202208-M	215105
202-UL						
202-USS	1110 N [250 lbf]				202943-M	215905
202	890 N [200 lbf]			0,15kg [0.33lbs]	202208-M	---
202-SS	1110 N [250 lbf]				205943-M	---
202-UB	890 N [200 lbf]			0,16kg [0.35lbs]	202208-M	215105
202-B				0,15kg [0.33lbs]		
202-TU				0,17kg [0.38lbs]		
202-T				0,16kg [0.35lbs]	---	---
202-U-L ⓘ						
202-U-L-BLK ⓘ						
202-UB-L ⓘ						
202-UB-L-BLK ⓘ						

ⓘ This item is available upon request

Holding Capacities

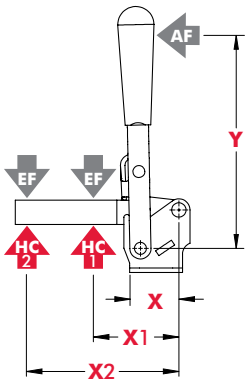

Model	X	X1	X2	Y	‡HC1	‡HC2	‡EF(X1):AF	‡EF(X2):AF
202-U	[0.79] 20	[1.25] 32	[2.25] 57	[3.42] 87	[200 lbf] 890N	[140 lbf] 625N	10:1	5:1
202-UL			[2.88] 73			[150 lbf] 670N		4:1
202-USS			[2.25] 57	[3.00] 76	[250 lbf] 1110N	[170 lbf] 760N		5:1
202		---	[1.88] 48	[3.42] 87	---	[200 lbf] 890N	---	8:1
202-SS				[3.00] 76	---	[250 lbf] 1110N		
202-UB		[1.25] 32	[2.25] 57	[3.42] 87	[200 lbf] 890N	[140 lbf] 625N	10.1	5:1
202-B		---	[1.88] 48		---	[200 lbf] 890N	---	8:1
202-TU		[1.25] 32	[2.25] 57	[2.13] 54	[200 lbf] 890N	[140 lbf] 625N	11:1	7:1
202-T		---	[1.88] 48		---	[200 lbf] 890N	---	6:1
202-U-L ⓘ		[1.25] 32	[2.25] 57	[3.42] 87	[200 lbf] 890N	[140 lbf] 625N	10:1	5:1
202-U-L-BLK ⓘ								
202-UB-L ⓘ								
202-UB-L-BLK ⓘ								

Dimensions shown "mm [inch]" ‡ **HC** = Holding Capacity, **EF** = Exerting Force, **AF** = Applied Force

ⓘ This item is available upon request

202 SERIES

Vertical Hold Down Clamps | Dimensions | -U/-UL/-USS/-SS/-UB/-B/-TU/-T

202-U
Flanged Base
U-Bar

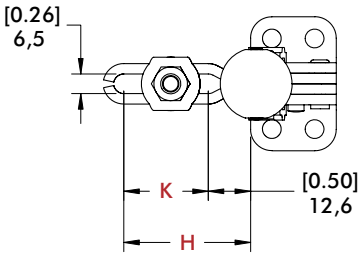

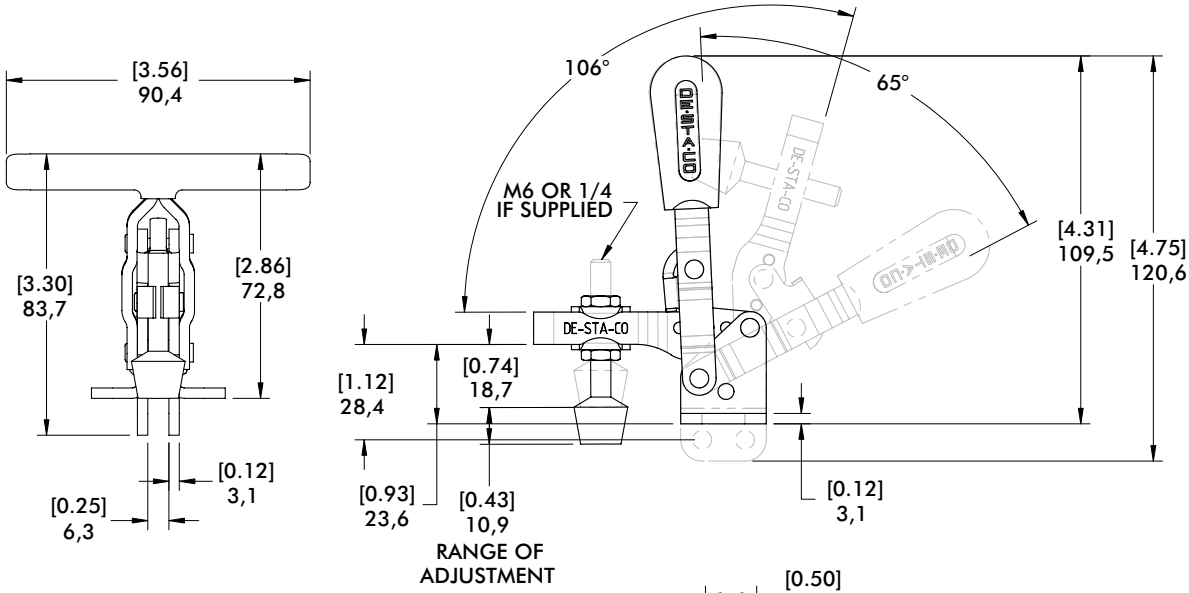

Open Bar Option

See page MC-ACC-7 for complete offering of open bar accessories

Flanged Base
Model
202-U-L ⓘ
202-U-L-BLK ⓘ

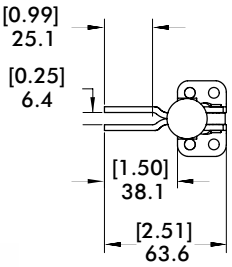

Straight Base
Model
202-UB-L ⓘ
202-UB-L-BLK ⓘ

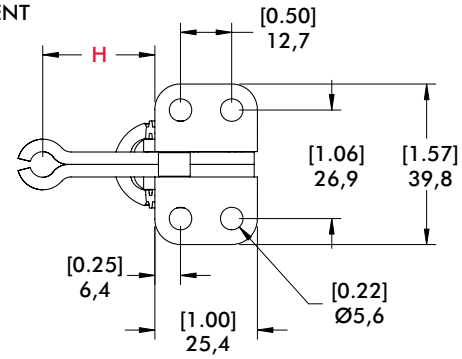

mm [INCH]
THIRD ANGLE PROJECTION

Bar Style	Clamp Models	H	K
	202-U/202-UB/ 202-USS/202-TU	[1.73] 44,1	[0.98] 25
	202-UL ⓘ	[2.29] 58,1	[1.51] 38,4
	202/202-B/ 202-T/202-SS	[1.08] 27,4	---
	202-U-L ⓘ/ 202-UB-L ⓘ	[1.50] 38,1	---

ⓘ This item is available upon request

Dimensions and technical information are subject to change without notice

Application Areas

Clamping during the assembling, drilling, testing, gluing, locking of covers and much more. The vertical clamp is the most frequently used product whenever clamping products are to be integrated with a manual fixture.

The essential product features

- In the clamping position, the handle is vertical
- Vertical clamps open at an angle between 75° and 215°
- Vertical clamps are offered with U-shaped or heavy-duty solid clamping bars
- Vertical clamps have a straight or flanged base. The heavy-duty vertical clamps possess a base that can be welded on without a hole pattern

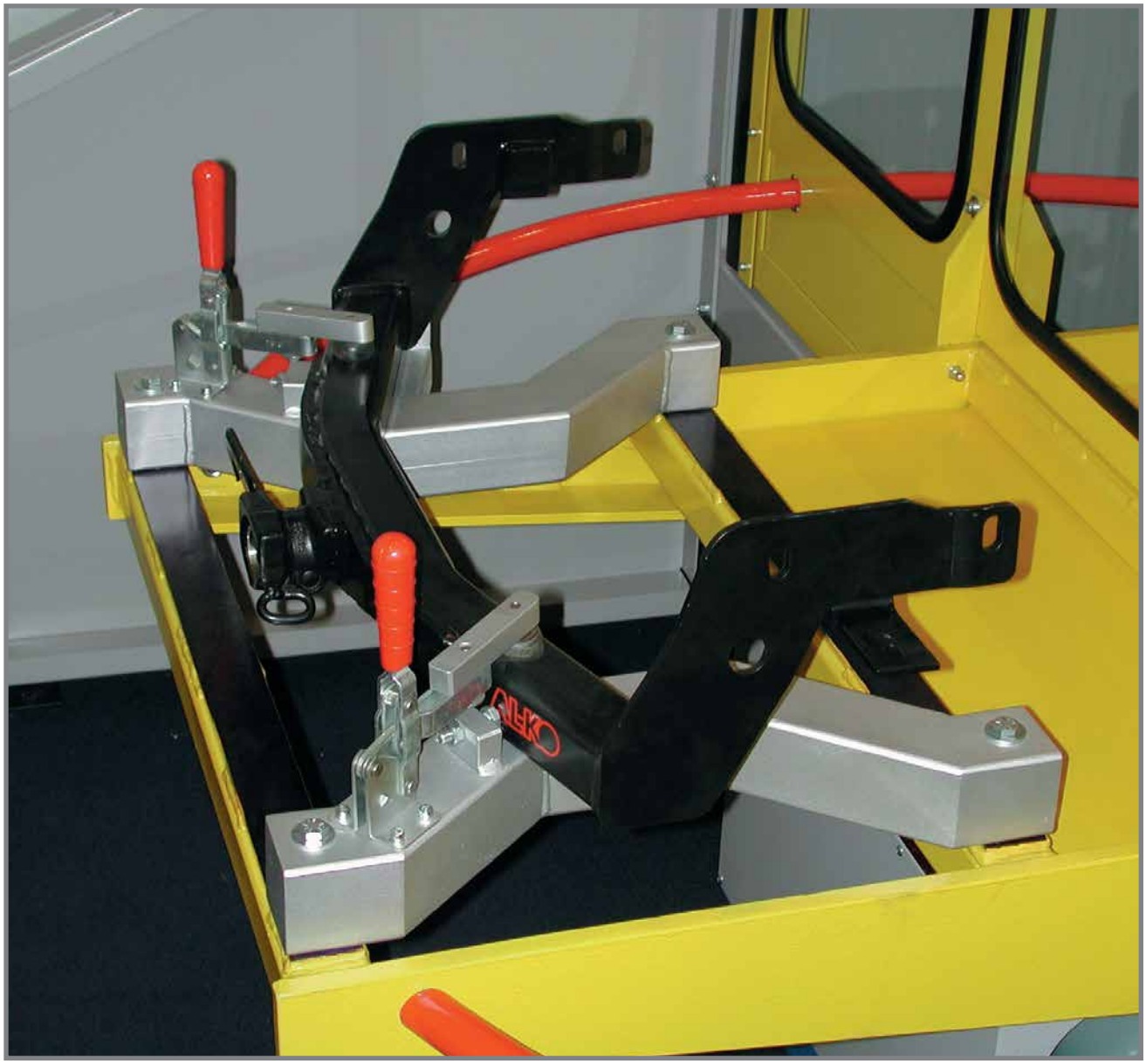

207 SERIES

Vertical Hold Down Clamps | Product Overview

Features:
- Largest selection of arm and mounting options
- Low profile T-Handle version available
- Available in stainless steel
- BLK models feature a black, non-reflective finish

Applications:
- Checking fixtures
- Assembly & test
- Light machining
- Woodworking

Also Available:
See page MC-ACC-1 for accessories

807-U Pneumatic toggle clamp
(See page MC-PTC-8)

807-S Pneumatic toggle clamp
(See page MC-PTC-8)

Accepts M8 or 5/16 spindle accessories

207-**U**
Flanged Base
U-Bar

207-**UL**
Flanged Base
Long U-Bar

207-**USS**
Stainless
Flanged Base
U-Bar

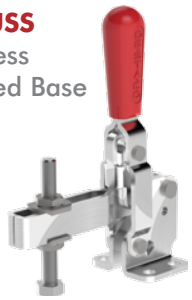

207-**S**
Flanged Base
Solid Bar

207-**L**
Flanged Base
Long Solid Bar

207-**TU**
Flanged Base
T-Handle
U-Bar

207-**TUL**
Flanged Base
T-Handle
Long U-Bar

207-**UR**
Flanged Base
U-Bar
with
DESTACO®
Toggle Lock
Plus

207-**LR**
Flanged Base
Long Solid Bar
with
DESTACO®
Toggle Lock
Plus

207-**UB**
Straight Base
U-Bar

207-**ULB**
Straight Base
Long U-Bar

207-**SB**
Straight Base
Solid Bar

207-**LB**
Straight Base
Long Solid
Bar

207-**LBR**ⓘ
Straight Base
Long Solid
Bar with
DESTACO®
Toggle Lock
Plus

207-**UF**ⓘ
U-Bar
Dual Mount

207-**SF**ⓘ
Solid Bar
Dual Mount

207-**U-L**ⓘ
Flange Base
Open Bar

207-**U-L**-BLK
Blackout Series
Flanged Base
Open U-Bar

207-**UB-L**ⓘ
Straight Base
Open Bar

207-**UB-L**-BLK
Blackout Series
Straight Base
Open U-Bar

207305
Flanged Grip. Provides added safety and protection. Fits all 207 Series (except T-Handle) clamps. Order separately.

ⓘ This item is available upon request

Dimensions and technical information are subject to change without notice

Model	Max. Holding Capacity	Clamp Bar Opening (+10°)	Handle Opening (+10°)	Weight	Accessories (Supplied) Bolt Retainer	Spindle Assembly	Flanged Washers
207-U 207-UR 207-UL	1670 N [375 lbf]	99°	57°	0,30kg [0.67lb] 0,45kg [1.00lb] 0,30kg [.67lb]	---	225208-M	507107
207-USS	2000 N [450 lbf]			0,32kg [0.70lb]	---	207943-M	507907
207-S 207-L 207-LR	2220 N [500 lbf]			0,31kg [0.69lb] 0,34kg [0.74lb] 0,45kg [1.00lb]	207105	---	---
207-UB 207-ULB	1670 N [375 lbf]			0,33kg [0.72lb]	---	225208-M	507107
207-SB 207-LB 207-LBR ⓘ	2220 N [500 lbf]			0,31kg [0.69lb] 0,34kg [0.75lb] 0,45kg [1.00lb]	207105	---	---
207-TU 207-TUL	1670 N [375 lbf]			0,33kg [0.72lb]	---	---	507107
207-UF ⓘ	1670 N [375 lbf]	96°	56°	0,43kg [0.94lb]	---	225208-M	507107
207-SF ⓘ	2220 N [500 lbf]	90°	57°	0,38kg [0.84lb]	207105	---	---
207-U-L ⓘ 207-U-L-BLK ⓘ 207-UB-L ⓘ 207-UB-L-BLK ⓘ	1670 N [375 lbf]	99°		0,38kg [0.84lb]	---	---	507107 507107-BLK 507107 507107-BLK

ⓘ This item is available upon request

Holding Capacities

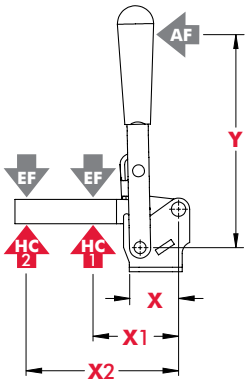

Model	X	X1	X2	Y	‡HC1	‡HC2	‡EF(X1):AF	‡EF(X2):AF
U/UB/UR	[1.28] 32,6	[2.00] 50,8	[3.75] 95,3	[4.90] 124,5	[375 lbf] 1670N	[225 lbf] 1000N	12:1	6:1
UL/ULB		[3.88] 98,5	[5.00] 127			[150 lbf] 670N	7:1	4:1
USS		[2.00] 50,8	[3.75] 95,3		[450 lbf] 2000N	[240 lbf] 1070N	10:1	5:1
S/SB		[2.88] 73,0			[500 lbf] 2220N	[350 lbf] 1560N		7:1
L/LR LB/LBR		[2.88] 73,0	[5.00] 127					5:1
TU		[2.00] 50,8	[3.75] 95,3	[3.66] 9	[375 lbf] 1670N	[225 lbf] 1000N	6:1	4:1
TUL		[3.88] 98,5	[5.00] 127			[150 lbf] 670N	4:1	3:1
U-L UB-L		[2.00] 50,8	[3.75] 95,3	[4.90] 124,5	[375 lbf] 1670N	[2225 lbf] 1000N	12:1	6:1

Dimensions shown "mm [inch]" ‡ **HC** = Holding Capacity, **EF** = Exerting Force, **AF** = Applied Force

207 SERIES

Vertical Hold Down Clamps | Dimensions | -U/-UL/-S/-L/-TU/-TUL/-UR/-LR/-UB/-ULB/-SB-/-LB/-LBR

207-U
Flanged Base
U-Bar

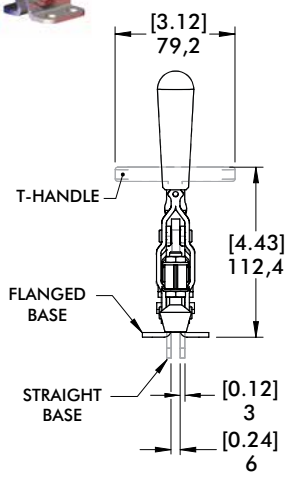

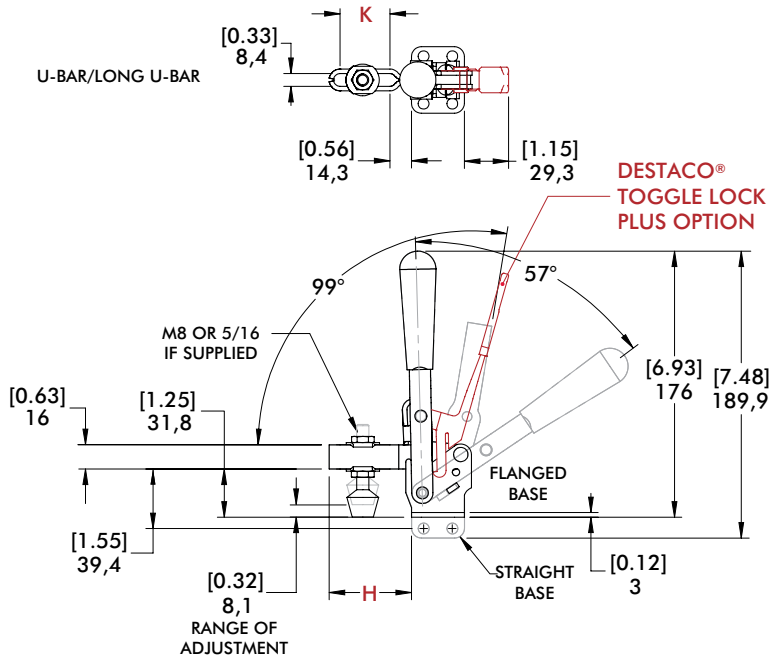

207-SB
Straight Base
Solid Bar

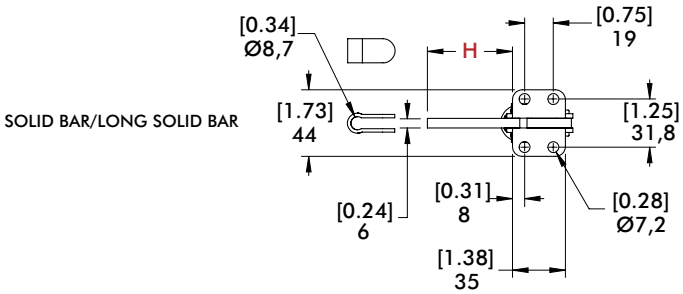

mm [INCH]

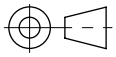

THIRD ANGLE
PROJECTION

Bar Style	Clamp Models	H	K
	207-U/207-UR/207-TU/207-UB	[2.14] 54,4	[1.30] 33
	207-UL/207-ULB/207-TUL	[3.84] 97,6	[2.94] 74,6
	207-S/207-SB	[2.21] 56,2	---
	207-L/207-LR/207-LB/207-LBR ⓘ	[3.48] 88,4	---

ⓘ This item is available upon request

Vertical Hold Down Clamps | Dimensions | Dual Mount

Model
207-SF ⓘ

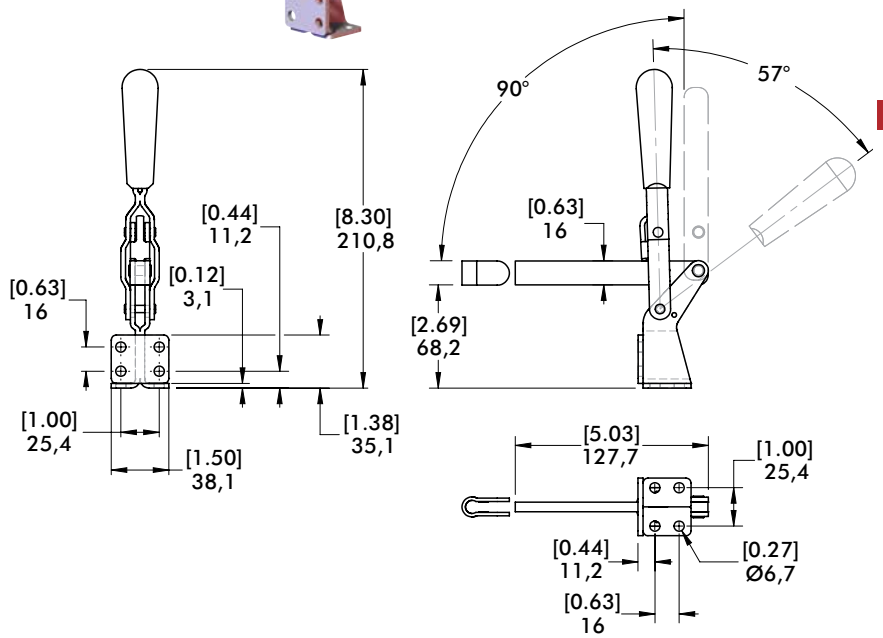

Model
207-UF ⓘ

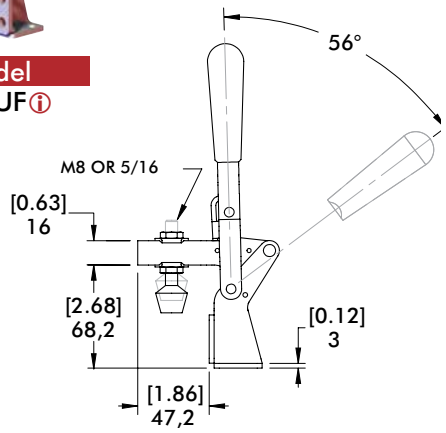

ⓘ This item is available upon request

Open Bar Option

See page MC-ACC-7 for Complete offering of Open bar accessories

Flanged Base
Model
207-U-L ⓘ
207-U-L-BLK ⓘ

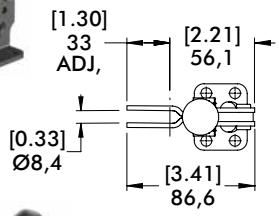

Straight Base
Model
207-UB-L ⓘ
207-UB-L-BLK ⓘ

Stainless Steel

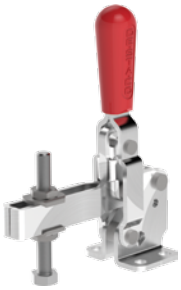

Model
207-USS

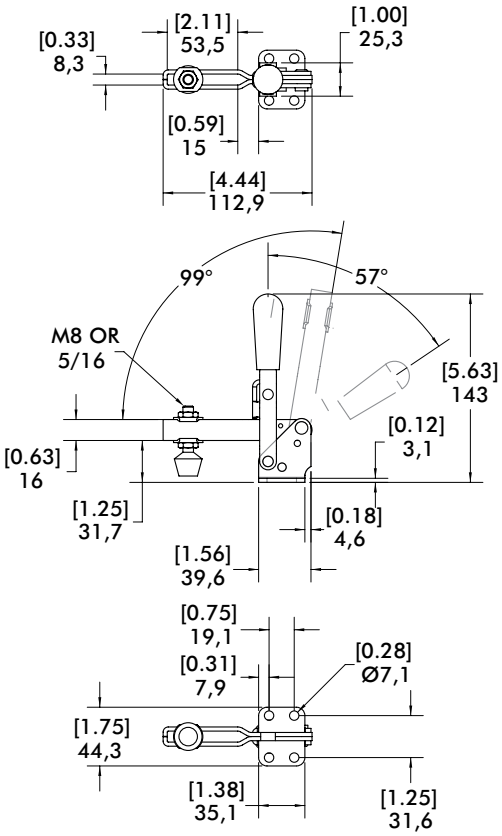

mm [INCH]
THIRD ANGLE PROJECTION

210 SERIES

Vertical Hold Down Clamps | Product Overview

Features:
- DESTACO® Toggle Lock Plus versions available
- Available in stainless steel
- Accommodates M10 or 3/8 spindle accessories

Applications:
- Assembly & test
- Light machining
- Light welding

Also Available:
See page MC-ACC-1 for accessories
810-U Pneumatic Toggle Clamp
(See page MC-PTC-9)
810-S Pneumatic Toggle Clamp
(See page MC-PTC-9)

210-**U**
Flanged Base
U-Bar

210-**USS**
Flanged Base
U-bar, Stainless
Steel

210-**S**
Flanged Base
Solid Bar

210-**UB**
Straight Base
U-bar

210-**SB**
Straight Base,
Solid Bar

210-**UR**
Flanged Base
U Bar
with
DESTACO®
Toggle Lock
Plus

210-**SR**
Flanged Base
Solid Bar
with
DESTACO®
Toggle Lock
Plus

210-**TU**
Flanged Base
U Bar,
T-Handle

Technical Information

Model	Max. Holding Capacity	Clamp Bar Opening (+10°)	Handle Opening (+10°)	Weight	Accessories (Supplied)		
					Bolt Retainer	Spindle Assembly	Flanged Washers
210-U	2670 N [600 lbf]	103°	58°	0,59kg [1.29lbs]	---	240208-M	235106
210-USS	3340 N [750 lbf]					237943-M	235906
210-S					210114	237943-M	---
210-UB	2670 N [600 lbf]				---	240208-M	235106
210-SB	3340 N [750 lbf]				210114	---	---
210-UR	2670 N [600 lbf]			0,73kg [1.60lbs]	---	240208-M	235106
210-SR	3340 N [750 lbf]				210114	---	---
210-TU	2670 N [600 lbf]			0,62kg [1.36lbs]	---	---	235106

Dimensions and technical information are subject to change without notice

Vertical Hold Down Clamps | Holding Capacities

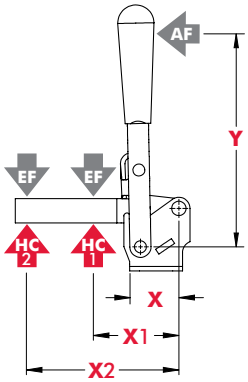

Model	X	X1	X2	Y	‡HC1	‡HC2	‡EF(X1):AF	EF(X2):AF
U/UB/UR	[1.54] 39	[2.38] 60,5	[4.88] 124	[6.75] 171,5	[600lbf.] 2670N	[290lbf.] 1290N	14:1	7:1
USS					[750lbf.] 3340N	[360lbf.] 1600N		
S/SR/SB		[3.62] 92,0	[5.25] 133	[4.50] 114,5	[750lbf.] 3340N	[500lbf.] 2220N	11:1	9:1
TU		[2.38] 60,5	[4.88] 124		[600lbf.] 2670N	[290lbf.] 1290N		5:1

Dimensions shown "mm [inch]" ‡ **HC** = Holding Capacity, **EF** = Exerting Force, **AF** = Applied Force
See page MC-TEC-4 for additional information.

Dimensions | -U/-USS/-S/-UB/-SB-/-UR/-SR/-TU

210-U
Flanged Base
U-Bar

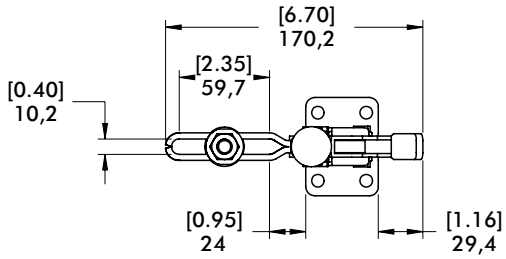

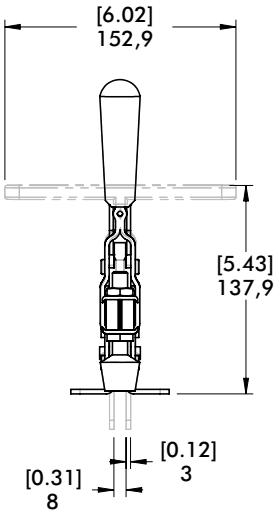

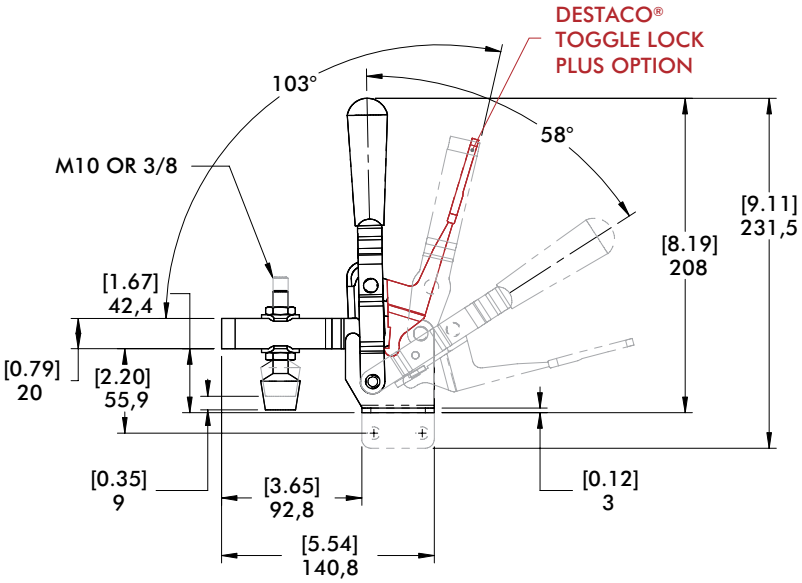

210-SR
Flanged Base
Solid Bar
with
DESTACO®
Toggle Lock
Plus

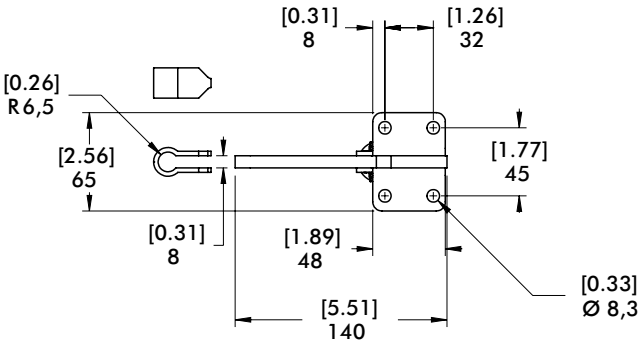

mm [INCH]
THIRD ANGLE PROJECTION

247, 267 SERIES

Vertical Hold Down Clamps | Product Overview

Features:
- Hardened steel bushings
- Large bar guides for greater lateral stability on Model 247
- Series 247 accommodates M12 or 1/2 spindle accessory
- Series 267 accommodates M16 or 5/8 spindle accessory

Applications:
- Assembly & test
- Light machining
- Welding

Also Available:
See page MC-ACC-1 for accessories
847-U Pneumatic Toggle Clamp
(See page MC-PTC-15)
847-S Pneumatic Toggle Clamp
(See page MC-PTC-15)

247-**U**
Flanged Base
U-Bar

247-**S**
Flanged Base
Solid Bar

247-**UB**ⓘ
Straight Base
U-Bar

267-**U**
Flanged Base
U-Bar

267-**S**ⓘ
Flanged Base
Solid Bar

Note:
Clamps shown with included accessories.

Technical Information

Model	Max. Holding Capacity	Clamp Bar Opening (+10°)	Handle Opening (+10°)	Weight	Accessories (Supplied) Bolt Retainer	Spindle Assembly	Flanged Washers
247-U	4400 N [1000 lbf]	120°	67°	1,07kg [2.36lbs]	---	247208-M	247109
247-S				1,08kg [2.36lbs]	247110	---	---
247-UBⓘ				1,07kg [2.36lbs]	---	247208-M	247109
267-U	5340 N [1200 lbf]	140°	72°	2,18kg [4.80lbs]	---	267203-M	267102
267-Sⓘ				1,98kg [4.36lbs]	110122	---	---

ⓘ This item is available upon request

Holding Capacities

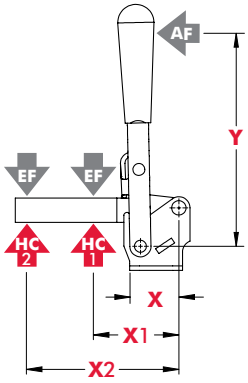

Model	X	X1	X2	Y	‡HC1	‡HC2	‡EF(X1):AF	‡EF(X2):AF
247-U/ 247-UBⓘ	[1.69] 43	[3.00] 76,2	[6.13] 155,7	[6.71] 170,5	[1000lbf.] 4450N	[480lbf.] 2140N	12:1	6:1
247-S		[4.56] 115,8	[7.00] 177,8			[650lbf.] 2900N	10:1	5:1
267-U	[2.50] 63,5	[4.00] 101,6	[8.00] 203,2	[9.25] 235	[1200lbf.] 5340N	[600lbf.] 2670N	18:1	8:1
267-Sⓘ		[6.00] 152,4	[8.75] 222,3			[820lbf.] 3650N	12:1	

Dimensions shown "mm [inch]" ‡ **HC** = Holding Capacity, **EF** = Exerting Force, **AF** = Applied Force
See page MC-TEC-4 for additional information. ⓘ This item is available upon request

Dimensions and technical information are subject to change without notice

247-**U**
Flanged Base
U-Bar

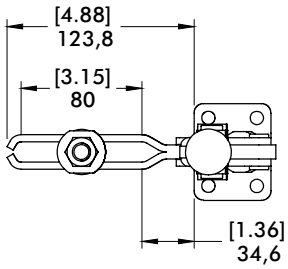

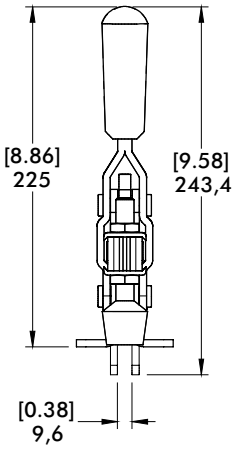

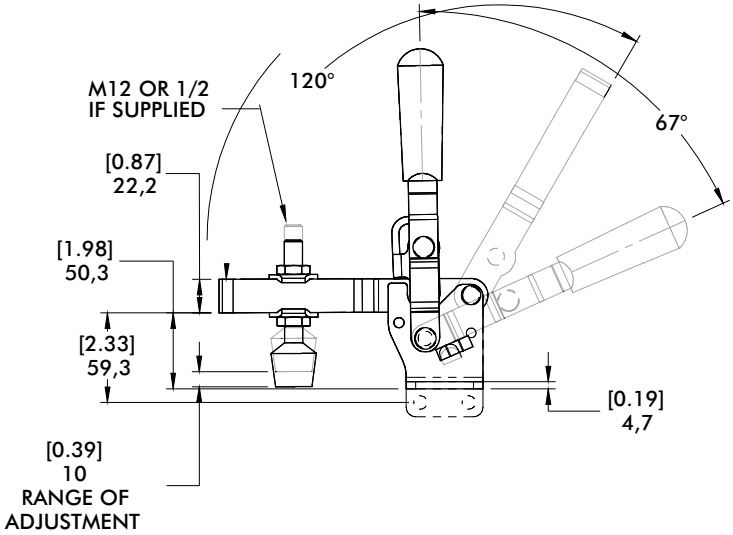

247-**S**
Flanged Base
Solid Bar

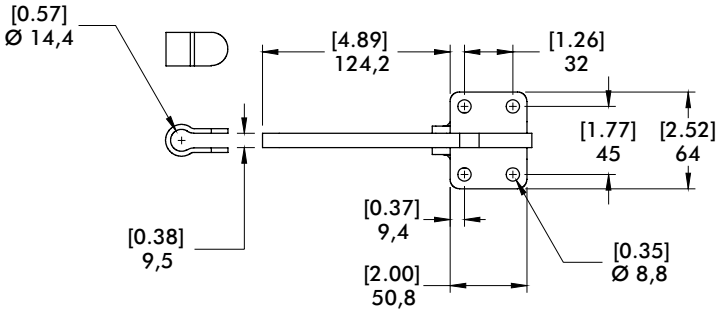

mm [INCH]

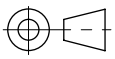

THIRD ANGLE
PROJECTION

267 SERIES

Vertical Hold Down Clamps | Dimensions

267-U
Flanged Base
U-Bar

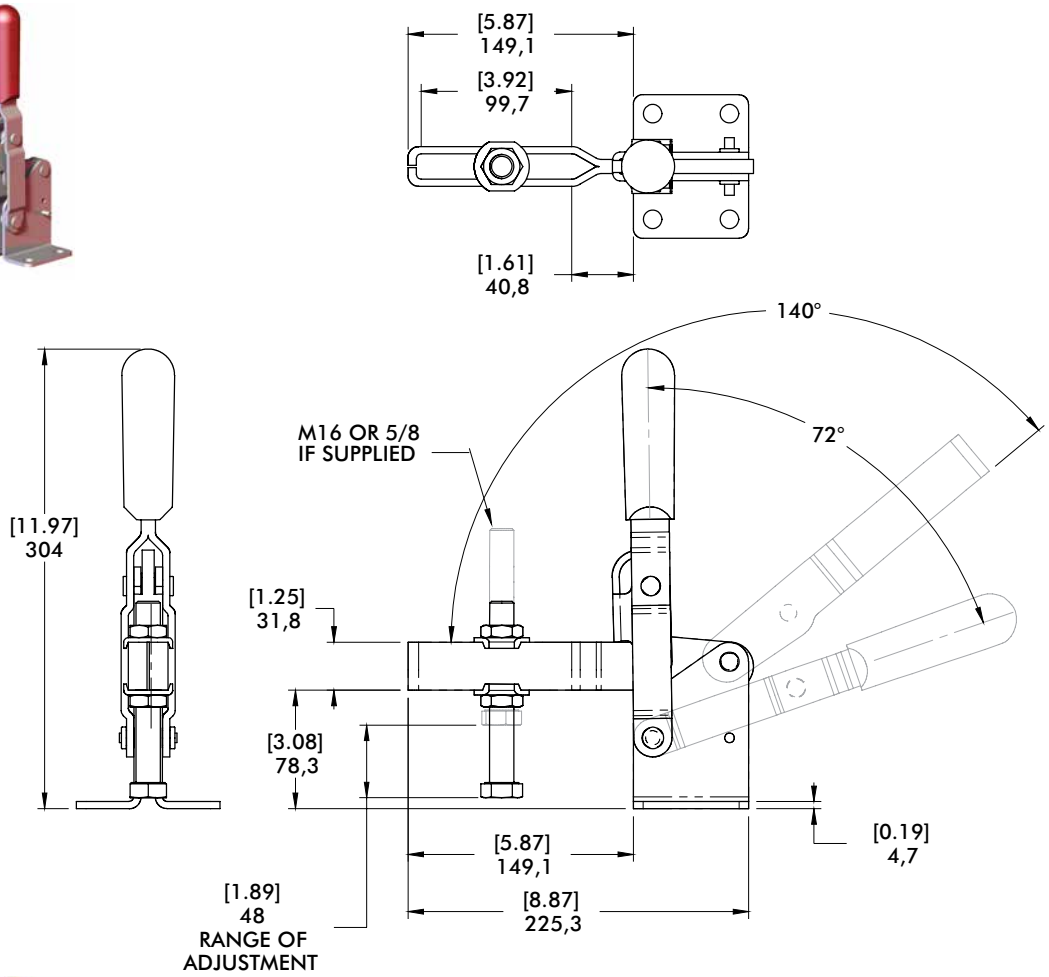

267-Sⓘ
Flanged Base
Solid Bar

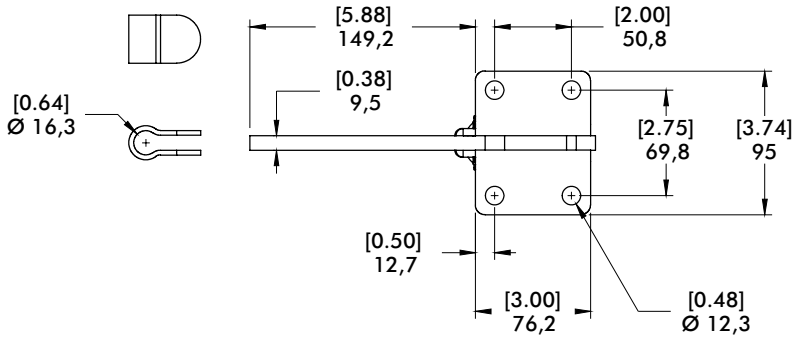

mm [INCH]

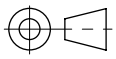

THIRD ANGLE
PROJECTION

Dimensions and technical information are subject to change without notice

VERTICAL HOLD DOWN CLAMPS

Application Examples

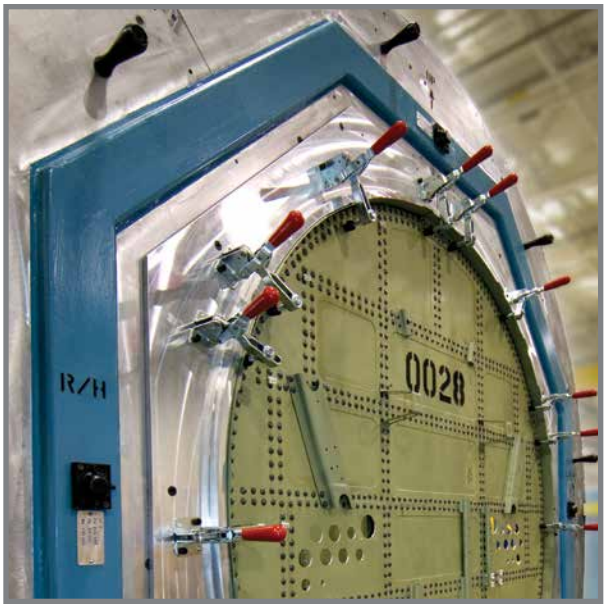

Model 210-**U**
used in an airframe
assembly fixture

Model 210-**U**
shown being used
in a checking fixture
application.

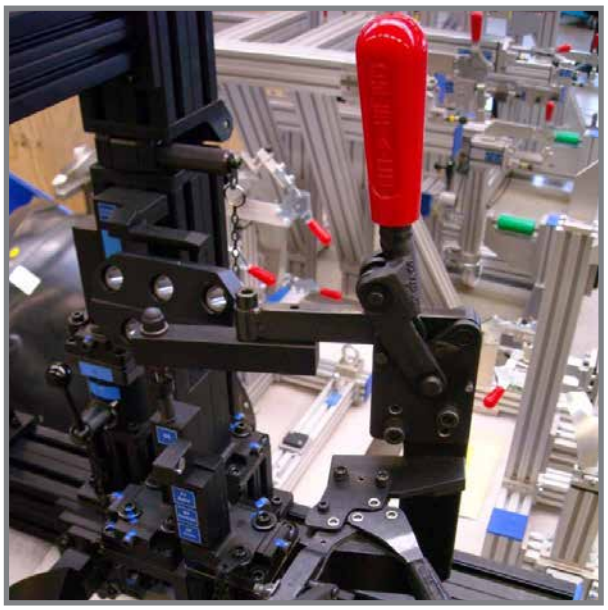

Model 533-**LB**
and 227-**UB** shown
with black finish in
a fixture for used for
optical inspection.

5905, 5910, 5915 SERIES

Heavy-Duty Vertical Hold Down Clamps | Product Overview

Features:
- High strength forged clamping arm for heavy-duty service
- Hardened steel pivot pins and bushings provide long life
- Black oxide finish

Applications:
- Welding fixtures
- Assembly fixtures

5905/5910/5915
Flanged Base

5905-**B**/5910-**B**/5915-**B**
Solid Base

Technical Information

Model	Max. Holding Capacity	Clamp Bar Opening (+10°)	Handle Opening (+10°)	Weight
5905	[750lbf.] 3340N	135°	70°	[1.08lbs] 0,49kg
5905-B				[0.82lbs] 0,37kg
5910	[1600lbf.] 7120N	132°	71°	[2.84lbs] 1,29kg
5910-B				[2.24lbs] 1,02kg
5915	[2750lbf.] 12230N	147°	74°	[6.16lbs] 2,79kg
5915-B				[5.11lbs] 2,32kg

Removable handle stop can be repositioned to limit opening angle to 90°.

Dimensions and technical information are subject to change without notice

5905, 5910, 5915 SERIES

Heavy-Duty Vertical Hold Down Clamps | Dimensions

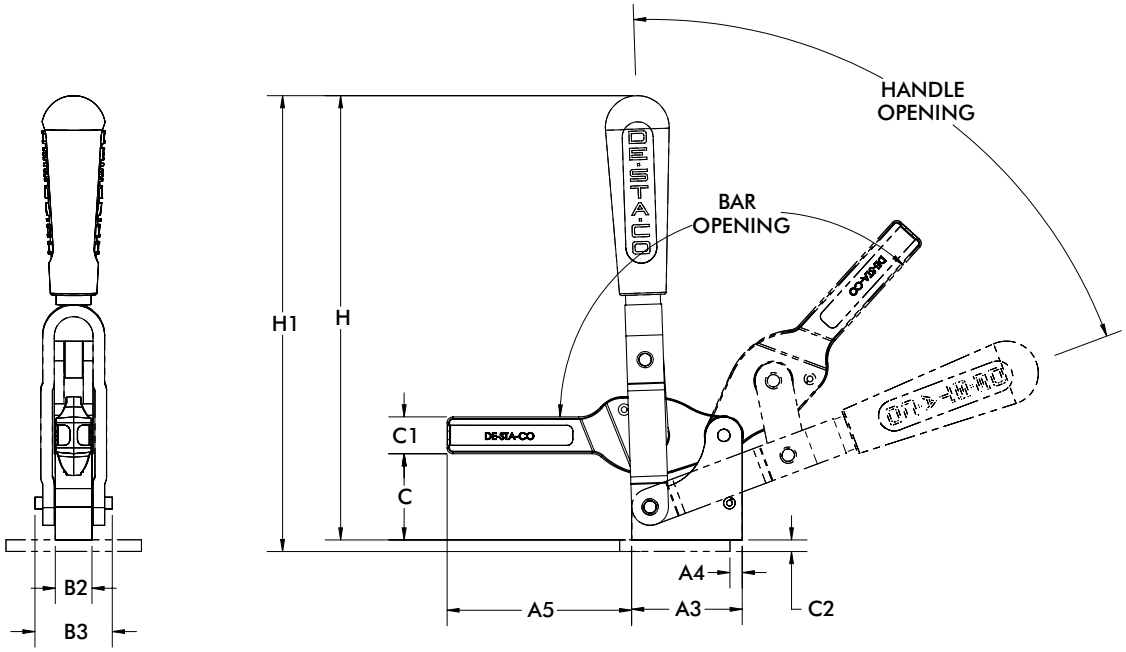

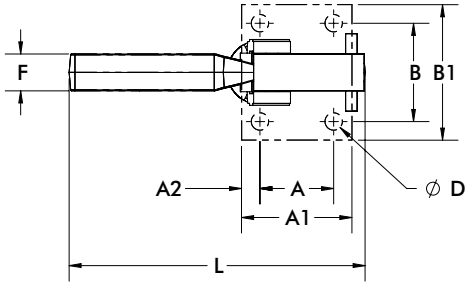

mm [INCH]

THIRD ANGLE PROJECTION

Model	A	A1	A2	A3	A4	A5	B	B1	B2	B3	C	C1	C2	D	F	H	H1	L
5905	[1.00] 25,4	[1.50] 38,1	[0.25] 6,4	[1.51] 38,4	[0.25] 6,4	[2.49] 63,2	[1.50] 38,1	[2.13] 54,1	[0.59] 15,0	[1.02] 25,9	[1.27] 32,3	[0.51] 12,9	[0.24] 6,1	[0.29] 7,3	[0.56] 14,2	[6.51] 165,4	[6.75] 171,4	[4.02] 102.10
5910	[1.50] 38,1	[2.24] 56,9	[0.37] 9,4	[2.25] 57,2	[0.25] 6,4	[3.76] 95,5	[2.00] 50,8	[2.76] 70,1	[0.75] 19,1	[1.57] 39,9	[1.75] 44,5	[0.75] 19,1	[0.24] 6,1	[0.41] 10,5	[0.75] 19,1	[9.04] 229,5	[9.27] 235,5	[6.02] 152.88
5915	[2.00] 50,8	[2.95] 74,9	[0.48] 12,2	[2.99] 75,9	[0.38] 9,7	[5.00] 127,0	[2.75] 69,9	[3.88] 98,6	[0.98] 24,9	[1.97] 50,0	[2.37] 60,2	[1.00] 25,4	[0.35] 8,9	[0.55] 14,0	[1.00] 25,4	[10.89] 276,7	[11.25] 285,7	[7.50] 190.50

Model	A3	A5	B2	B3
5905-B	[1.51] 38,4	[2.49] 63,2	[0.59] 15,0	[1.02] 25,9
5910-B	[2.25] 57,2	[3.76] 95,5	[0.75] 19,1	[1.57] 39,9
5915-B	[2.99] 76	[4.92] 125	[0.98] 25	[1.97] 50

5105, 5110 SERIES

Heavy-Duty Vertical Hold Down Clamps | Product Overview

Features:

- High strength forged clamping arm for heavy-duty service
- Hardened steel pivot pins and bushings provide long life
- Black oxide finish
- Large clearance under the clamping bar
- DESTACO® Toggle Lock Plus versions available†

Applications:

- Welding fixtures
- Assembly fixtures

Covered under one or more U.S./International Patents

5105/5110
Flanged Base

5105-**B**/5110-**B**
Soild
Base

5105-**R**/5110-**R**
Flanged Base
with
DESTACO®
Toggle Lock
Plus

5105-**BR**ⓘ/5110-**BR**ⓘ
Solid Base
with
DESTACO®
Toggle Lock
Plus

Technical Information

Model	Max. Holding Capacity	Clamp Bar Opening (+10°)	Handle Opening (+10°)	Weight
5105	[700lbf.] 3100N	89°	159°	[1.12lbs] 0,51kg
5105-B				[1.06lbs] 0,48kg
5105-R				[1.10lbs] 0,50kg
5105-BRⓘ				[1.17lbs] 0,53kg
5110	[1150lbf.] 5100N	74°	138°	[2.98lbs] 1,35kg
5110-B				[2.95lbs] 1,34kg
5110-R				[3.00lbs] 1,36kg
5110-BRⓘ				[3.02lbs] 1,37kg

ⓘ This item is available upon request.
† Toggle Lock Plus locks the handle in the closed position only.

5105, 5110 SERIES

Heavy-Duty Vertical Hold Down Clamps | Dimensions

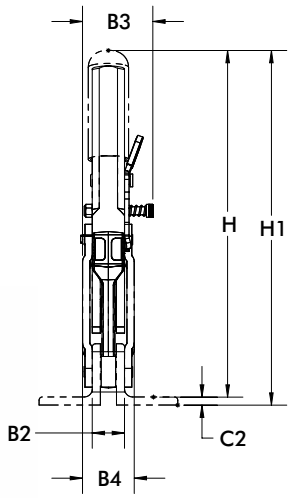

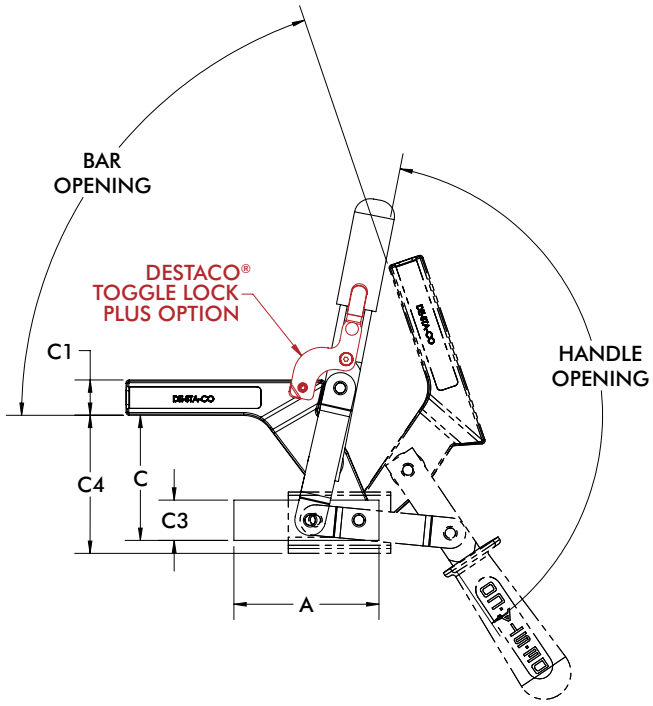

mm [INCH]

THIRD ANGLE PROJECTION

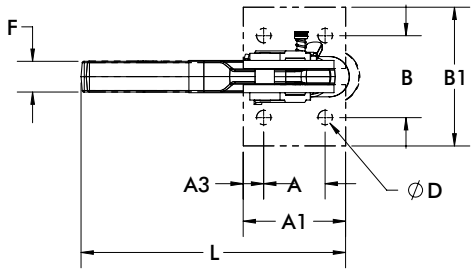

Model	A	A1	A2	B	B1	B2	B3	B4	C1	C2	C4	D	F	H1	L
5105	[1.00] 25,4	[1.62] 41,2	[0.31] 7,9	[1.46] 37	[2.24] 57	[0.59] 15	--	[0.98] 25	[0.51] 13,0	[0.16] 4,0	[2.54] 64,6	[0.26] 6,6	[0.56] 14,3	[6.54] 166,1	[4.13] 104,9
5105-R							[1.48] 37,5								
5110	[1.50] 38,1	[2.50] 63,5	[0.50] 12,7	[2.00] 50,8	[2.76] 70	[0.79] 20	--	[1.26] 32	[0.87] 22,0	[0.20] 5,0	[3.37] 85,6	[0.35] 9,0	[0.75] 19,1	[8.70] 221,1	[6.33] 160,9
5110-R							[1.67] 42,5								

Model	A3	B2	B3	B4	C	C1	C3	F	H
5105-B	[2.50] 63,5	[0.59] 15	--	[0.98] 25	[2.14] 54,3	[0.51] 13,0	[0.59] 15,0	[0.56] 14,3	[6.14] 156,0
5105-BR ⓘ			[1.48] 37,5						
5110-B	[3.54] 90	[0.79] 20	--	[1.26] 32	[3.05] 77,5	[0.87] 22,0	[0.98] 25,0	[0.75] 19,1	[8.39] 213,0
5110-BR ⓘ			[1.67] 42,5						

ⓘ This item is available upon request

528 SERIES

Heavy-Duty Vertical Hold Down Clamps | Product Overview

Features:
- Hardened steel bushings at pivot points for long life
- Solid bar may be modified to suit application requirements

Applications:
- Assembly & test
- Light machining
- Welding
- Medium to heavy duty clamping requirements

528
Flanged Base
Solid Bar

528-F ⓘ
Front Mount
Base Solid Bar

Technical Information

Model	Max. Holding Capacity	Clamp Bar Opening (+10°)	Handle Opening (+10°)	Weight
528 528-F ⓘ	4450 N [1000 lbf]	180°	177°	[2.50lbs] 1,13kg

ⓘ This item is available upon request

Holding Capacities | Dimensions

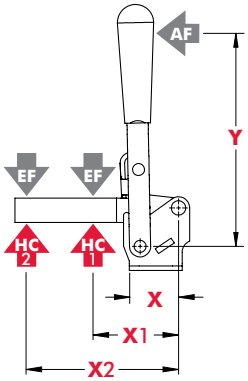

Model	X	X1	X2	Y	‡HC1	‡HC2	‡EF(X1):AF	‡EF(X2):AF
528 528-F	[1.38] 35	[3.50] 89	[6.00] 152	[5.50] 140	[1000lbf.] 4450N	[580lbf.] 2580N	23:1	12:1

Dimensions shown "mm [inch]" ‡ **HC** = Holding Capacity, **EF** = Exerting Force, **AF** = Applied Force
See page MC-TEC-4 for additional information.

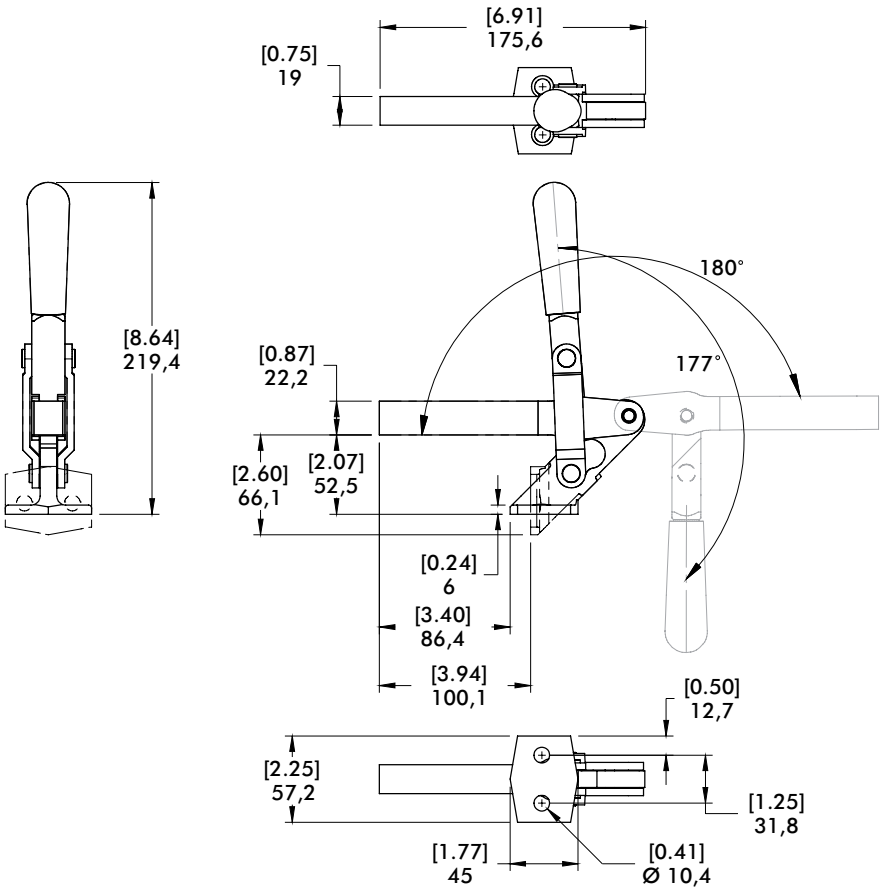

Dimensions and technical information are subject to change without notice

548, 578 SERIES

Heavy-Duty Vertical Hold Down Clamps | Product Overview

Features:
- Large bar guides for lateral stability
- Hardened steel pins and bushings for long life
- Replaceable pins

Applications:
- Assembly & test
- Light machining
- Welding
- Heavy duty clamping requirements

548
Straight Base
Solid Bar

578
Straight Base
Solid Bar

Technical Information

Model	Max. Holding Capacity	Clamp Bar Opening (+10°)	Handle Opening (+10°)	Weight
548	11100N [2500lbf]	199°	129°	2,40kg [5.30lbs]
578	17800N [4000lbf]			4,14kg [9.12lbs]

Holding Capacities | Dimensions

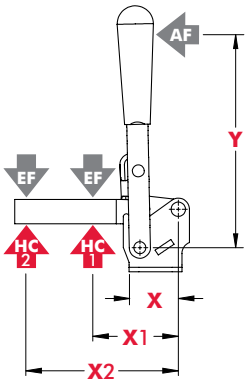

Model	X	X1	X2	Y	‡HC1	‡HC2	‡EF(X1):AF	‡EF(X2):AF
548	[2.75] 70	[3.50] 89	[6.00] 152	[7.50] 190	[2500lbf] 11100N	[1500lbf.] 6680N	4.5:1	3.4:1
578	[4.25] 108	[4.50] 114	[7.00] 178	[10.31] 262	[4000lbf] 17800N	[2500lbf.] 11100N	7.6:1	4.2:1

Dimensions shown "mm [inch]" ‡ **HC** = Holding Capacity, **EF** = Exerting Force, **AF** = Applied Force
See page MC-TEC-4 for additional information.

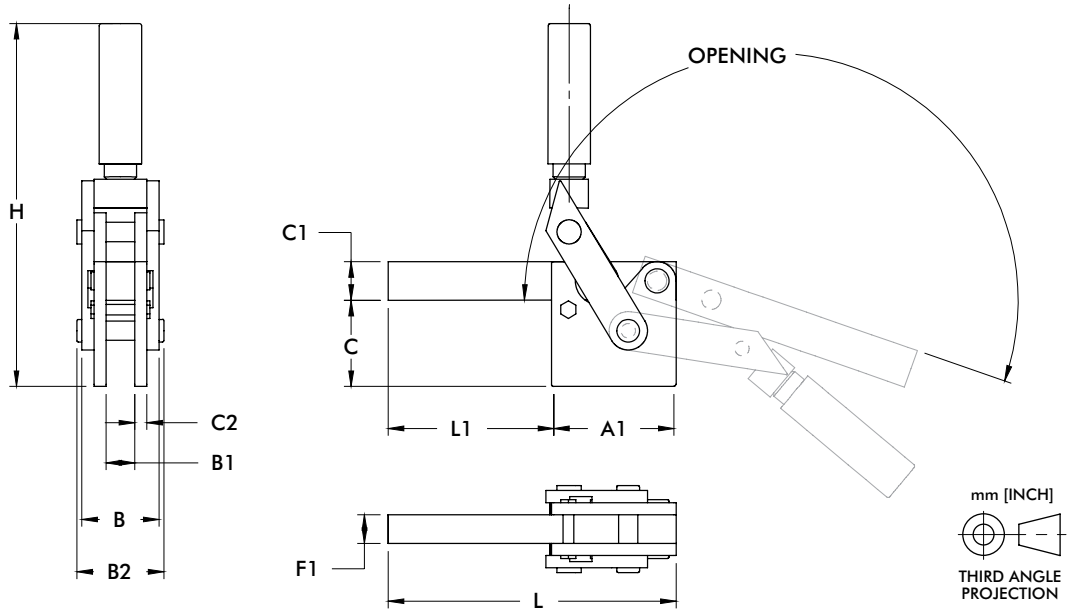

Model	A1	B	B1	B2	C	C1	C2	F1	H	L	L1
548	[3.25] 82,6	[2.01] 51	[0.75] 19,1	[2.26] 57,5	[2.24] 56,9	[1.00] 25,4	[0.31] 7,9	[0.75] 19,1	[9.45] 240	[7.50] 190,5	[4.25] 107,9
578	[4.02] 102,1	[2.38] 60,5	[0.87] 22,1	[2.70] 68,6	[2.79] 70,9	[1.26] 32	[0.37] 9,5	[0.87] 22,1	[11.04] 280,3	[8.62] 219	[4.61] 117,1

533, 535 SERIES

Heavy-Duty Vertical Hold Down Clamps | Product Overview

Features:
- Hardened steel bushings and pivot pins
- Large bar guides for greater lateral support
- Solid clamping bar may be modified to suit application requirements

Applications:
- Welding
- Heavy duty clamping applications

Also Available:
See page MC-ACC-1 for accessories

533-**L**
Flanged Base
Solid Bar

533-**LB**
Straight Base
Solid Bar

535-**L**
Flanged Base
Solid Bar

535-**LB**
Straight Base
Solid Bar

Technical Information

Model	Max. Holding Capacity	Clamp Bar Opening (+10°)	Handle Opening (+10°)	Weight	Accessories (Supplied) Bolt Retainer
533-L	7000 N [1575 lbf]	120°	90°	1,00kg [2.20lbs]	533108-M
533-LB					
535-L	10000 N [2250 lbf]			1,85kg [4.087lbs]	535108-M
535-LB					

Dimensions and technical information are subject to change without notice

533-**L**
Flanged Base
Solid Bar

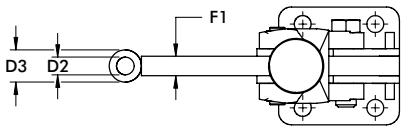

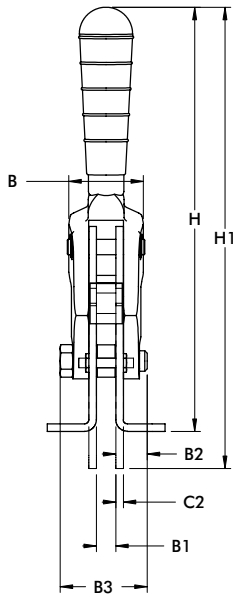

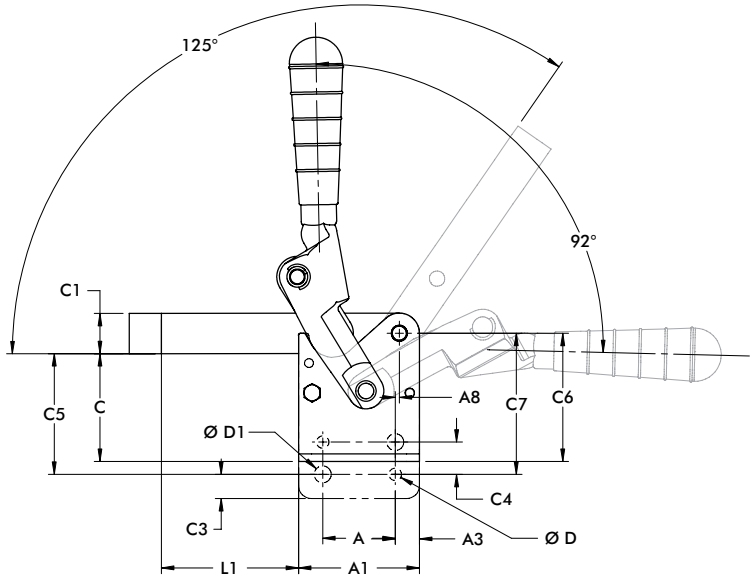

535-**L**
Flanged Base
Solid Bar

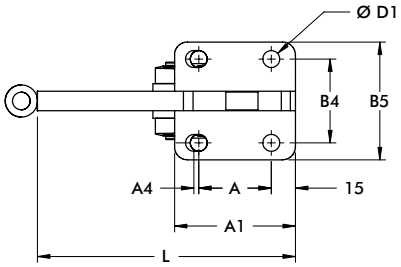

mm [INCH]

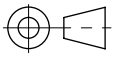

THIRD ANGLE PROJECTION

Model	A	A1	A3	A4	A8	B	B1	B2	B3	B4	B5	C	C1	C2
533-L	[1.18] 30	[2.36] 59,9	[0.59] 15	[0.08] 2	[0.20] 5.1	[1.52] 38,6	[0.39] 9,9	[0.69] 15,5	[1.75] 44,5	[1.77] 45	[2.44] 62	[1.86] 47,2	[0.79] 20,1	[0.19] 4,8
533-LB				--						--	--	--		
535-L	[1.77] 45	[2.95] 74,9			[0.18] 4,6	[1.89] 48	[0.47] 11,9	[0.89] 22,6	[2.13] 54,1	[2.05] 52,1	[2.87] 72,9	[2.63] 66,8	[0.98] 24,9	
535-LB										--	--	--		

Model	C3	C4	C5	C6	C7	D	D1	D2	D3	F1	H	H1	L	L1
533-L	--	--	--	[2.24] 56,9	--	--	[0.33] 8,4	[0.35] 8,9	[0.59] 15	[0.39] 9,9	[8.6] 218,4	--	[4.92] 125	[2.56] 65
533-LB	[0.39] 9,9	[0.59] 15	[1.86] 55,1	--	[2.56] 65	[0.22] 5.6					--	[9.31] 236,5		
535-L	--	--	--	[3.13] 79,5	--	--	[0.41] 10,4	[0.43] 10,9	[0.79] 20,1	[0.47] 11,9	[10.35] 262,9	--	[6.30] 160	[3.35] 85,1
535-LB	[0.59] 15	[0.79] 20,1	[2.95] 74,9	--	[3.44] 87,4	[0.30] 7,6					--	[11.26] 286		

558 SERIES

Heavy-Duty Vertical Hold Down Clamps | Product Overview

Features:
- Forged alloy steel handle and links for rugged service
- Hardened steel pins and bushings
- Hold down bar can be machined to suit application requirements

Applications:
- Welding
- Heavy duty clamping requirements

Also Available:
Model 858 Pneumatic Toggle clamp
See page MC-PTC-17

558

Technical Information

Model	Max. Holding Capacity	Clamp Bar Opening (+10°)	Handle Opening (+10°)	Weight
558	11100 N [2500 lbf]	192°	64°	2,27kg [5.0lbs]

Holding Capacities | Dimensions

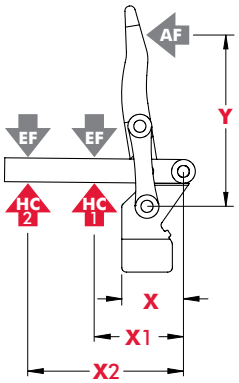

Model	X	X1	‡HC1	‡HC2
558	65,8 [2.59]	76,2 [3.00]	[2500 lbf] 11100 N	[1500 lbf] 6680 N

Dimensions shown "mm [inch]" , ‡ **HC** = Holding Capacity

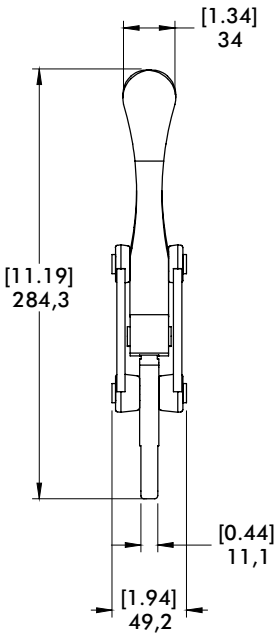

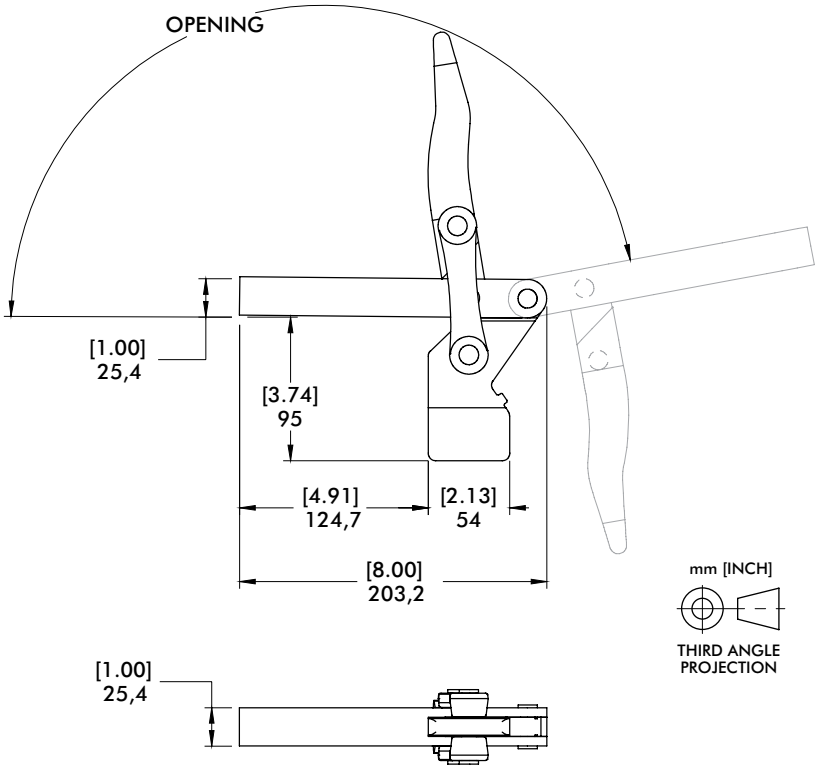

Dimensions and technical information are subject to change without notice

Vertical Hold Down Clamps | Product Overview

Features:
- Front flange mount
- Accepts M8 or 5/16" spindle accessory (not supplied)

Applications:
- Assembly & test
- Checking fixtures
- Light machining
- Woodworking

Also Available:
See page MC-ACC-1 for accessories

91090
Front Flanged Base
Open Bar

Technical Information | Dimensions

Model	Max. Holding Capacity	Clamp Bar Opening (+10°)	Handle Opening (+10°)	Weight	Recommended Accessories: Bolt Retainer	Recommended Accessories: Spindle Assembly	Recommended Accessories: Flanged Washers
91090	1710 N [385 lbf]	100°	60°	0,37kg [0.81lbs]	---	507208-M	507107

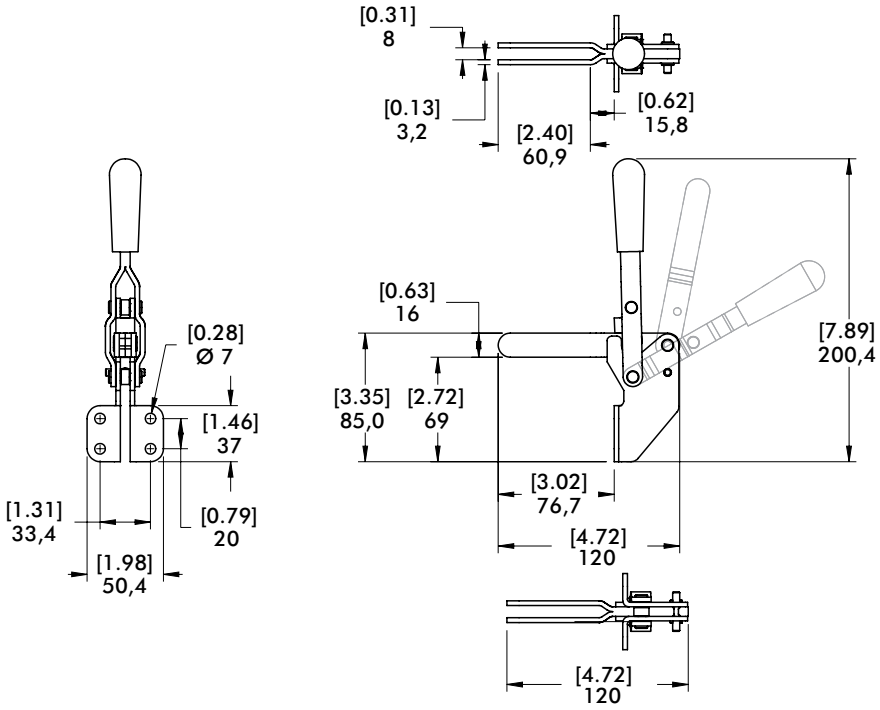

mm [INCH]
THIRD ANGLE PROJECTION

317 SERIES

Vertical Hold Down Clamps | Product Overview

Features:
- Dual mounting surfaces
- Large bar opening angle
- Accommodates M8 or 5/16" spindle accessories

Applications:
- Assembly & test
- Checking fixtures
- Light machining
- Woodworking

Also Available:
See page MC-ACC-1 for accessories
817-U Pneumatic Toggle Clamp
(See page MC-PTC-21)
817-S Pneumatic Toggle Clamp
(See page MC-PTC-21)

317-**U**
U-Bar

317-**S**
Solid Bar

Technical Information

Model	Max. Holding Capacity	Clamp Bar Opening (+10°)	Handle Opening (+10°)	Weight	Accessories (Supplied)		
					Bolt Retainer	Spindle Assembly	Flanged Washers
317-U	1670 N [375 lbf]	185°	60°	0,34kg [0.75lbs]	---	507208-M	507107
317-S	1780 N [400 lbf]				207105	---	---

Holding Capacities

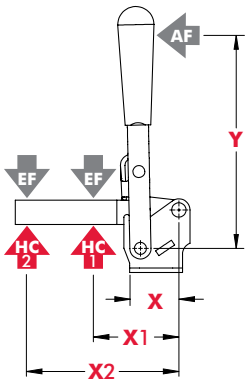

Model	X	X1	X2	Y	‡HC1	‡HC2	‡EF(X1):AF	‡EF(X2):AF
317-U	[1.57] 40,0	[2.00] 50,8	[3.75] 95,3	[4.00] 101,6	[375 lbf] 1670 N	[200lbf.] 900N	17:1	8:1
317-S		[2.50] 63,5	[5.00] 127,0		[400 lbf] 1780 N	[190lbf.] 850N	13:1	5:1

Dimensions shown "mm [inch]" ‡ **HC** = Holding Capacity, **EF** = Exerting Force, **AF** = Applied Force
See page MC-TEC-4 for additional information.

Dimensions and technical information are subject to change without notice

317-**U**
U-Bar

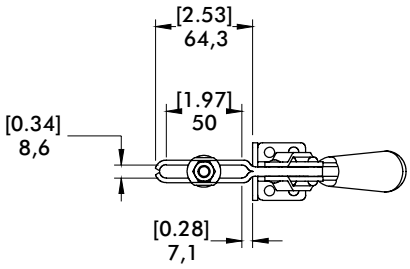

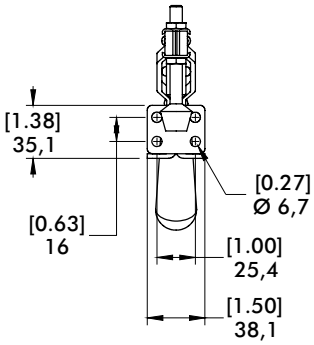

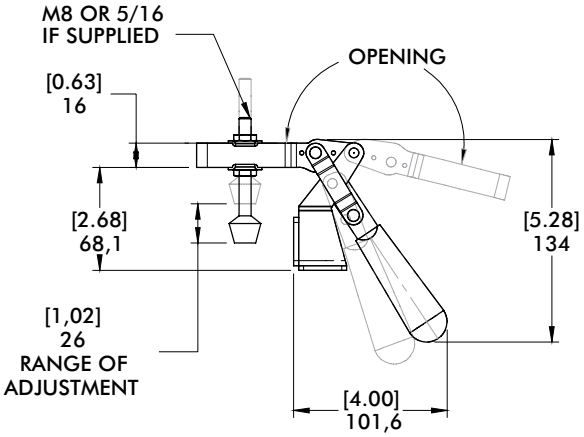

317-**S**
Solid Bar

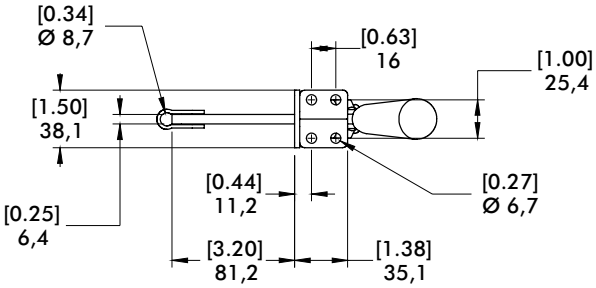

mm [INCH]

THIRD ANGLE
PROJECTION

527 SERIES

Vertical Hold Down Clamps | Product Overview

Features:
- Hardened steel bushings at pivot points
- Solid bar can be modified to suit application requirements
- Thumb lever on link for easy opening

Applications:
- Assembly & test
- Light machining
- Woodworking

527
Flanged Base

527-F ⓘ
Front Mount

Technical Information

Model	Max. Holding Capacity	Clamp Bar Opening (+10°)	Handle Opening (+10°)	Weight
527	4450 N [1000 lbf]	195°	65°	[2.50lbs] 1,13kg
527-F ⓘ				

ⓘ This item is available upon request

Holding Capacities | Dimensions

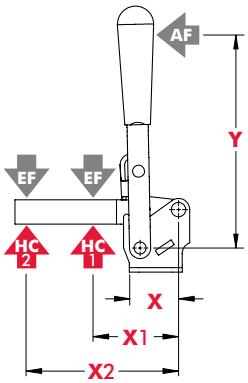

Model	X	X1	X2	Y	‡HC1	‡HC2	‡EF(X1):AF	‡EF(X2):AF
527	[3.12] 79,2	[3.50] 89,0	[6.00] 152,4	[4.00] 101,6	[1000lbf.] 4450N	[580lbf.] 2580N	23:1	12:1
527-F	[2.53] 64,3							

Dimensions shown "mm [inch]" ‡ **HC** = Holding Capacity, **EF** = Exerting Force, **AF** = Applied Force
See page MC-TEC-4 for additional information.

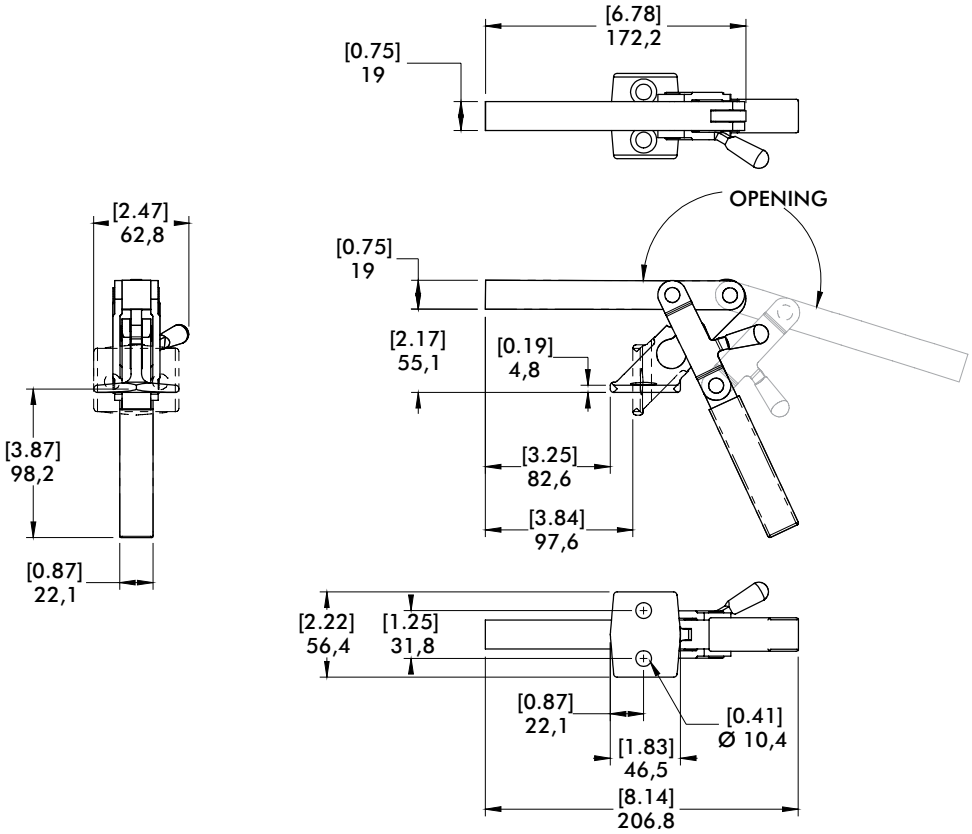

mm [INCH]
THIRD ANGLE PROJECTION

Dimensions and technical information are subject to change without notice

7-101, 7-58, 7-59, 7-60 SERIES

Heavy Duty Cam Action Series | Product Overview

Features:

- Cam action accommodates variable workpiece thickness
- Heavy duty construction
- Solid clamp arms may be modified to suit application requirements

Applications:

- Light machining
- Welding
- Assembly

Technical Information

7-101

7-58

Model	Max. Holding Capacity	Clamp Bar Opening (+10°)	Weight
7-101	2110 N [475 lbf]	80°	0,45kg [1.0lbs]
7-58	2670 N [600 lbf]	95°	0,91kg [2.0lbs]
7-59	4450 N [1000 lbf]	95°	1,36kg [3.0lbs]
7-60	7120 N [1600 lbf]	80°	2,27kg [5.0lbs]

Dimensions

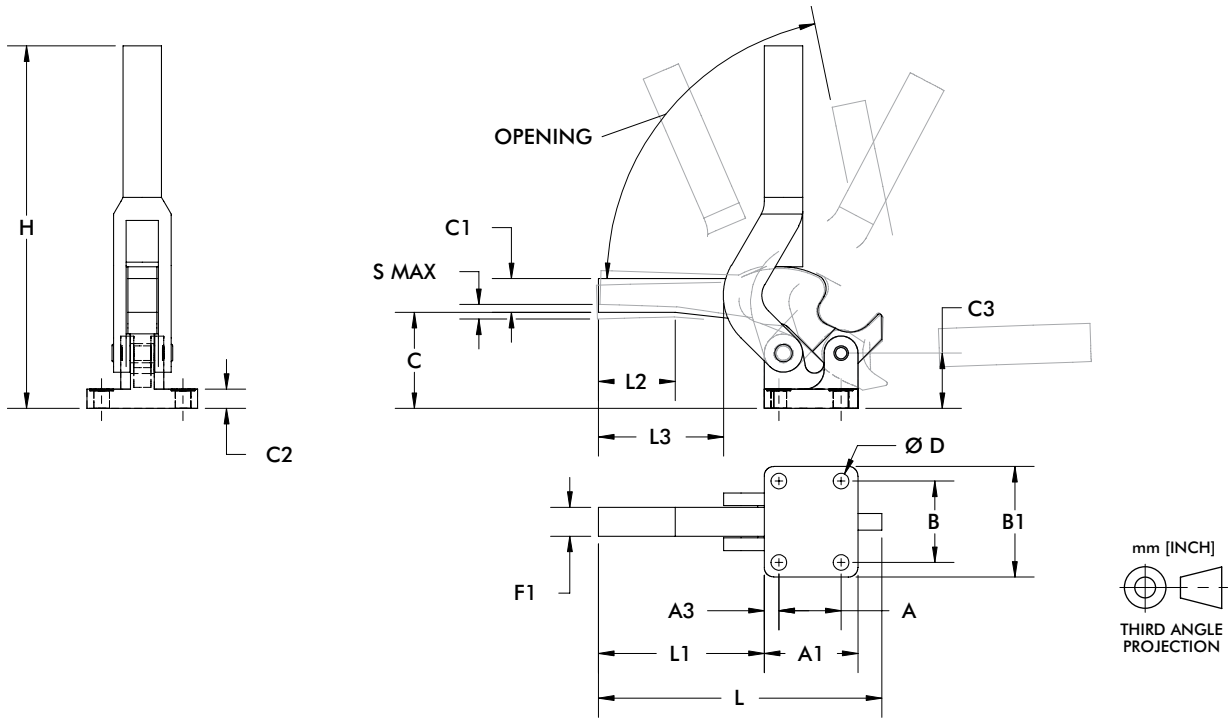

Model	A	A1	A3	B	B1	C	C1	C2	C3	D	F1	H	L	L1	L2	S max.
7-101	[0.75] 19,1	[1.25] 31,8	[0.25] 6,1	[1.25] 31,8	[1.75] 44,5	[1.44] 36,6	[0.50] 12,7	[0.31] 7,9	[1.00] 25,4	[0.22] 5,6	[0.50] 12,7	[5.00] 127	[4.63] 117,6	[3.12] 79,3	-	[0.13] 3,3
7-58	[1.00] 25,4	[1.69] 42,9	[0.34] 8,6	[1.62] 41,2	[2.25] 57,2	[1.87] 47,5	[0.56] 14,2	[0.38] 9,7	[1.12] 28,5	[0.28] 7,1	[0.50] 12,7	[7.00] 177,8	[6.99] 177,6	[2.55] 64,8	-	[0.13] 3,3
7-59	[1.38] 35,1	[2.06] 52,3	[0.39] 9,9	[1.88] 47,8	[2.50] 63,5	[2.19] 55,6	[0.63] 16	[0.44] 11,2	[1.25] 31,8	[0.34] 8,6	[0.63] 16	[8.50] 215,9	[6.00] 152,4	[3.50] 88,9	[1.24] 31,5	[0.19] 4,8
7-60	[1.62] 41,2	[2.44] 62	[0.44] 11,2	[2.12] 53,9	[2.88] 73,2	[2.50] 63,5	[0.88] 22,4	[0.50] 12,7	[1.44] 36,6	[0.41] 10,4	[0.75] 19,1	[9.50] 241,3	[7.40] 188	[4.38] 111,3	[1.97] 50	[0.25] 6,4

229 SERIES

Vertical Hold Down Clamps | Product Overview

Features:
- Cam action clamp holds workpieces of varying height
- Total clamping range of 8mm [.31in.]
- Accommodates M12 or ½" accessories

Applications:
- Assembly & test
- Light machining
- Welding

Also Available:
See page MC-ACC-1 for accessories

229
Flanged Base
Open Bar

Technical Information

Model	Max. Holding Capacity	Clamp Bar Opening (+10°)	Handle Opening (+10°)	Weight	Accessories (Supplied)	
					Spindle Assembly	Flanged Washers
229	4450 N [1000 lbf]	115°	180°	1,17kg [2.59lbs]	229203	247109

Holding Capacities

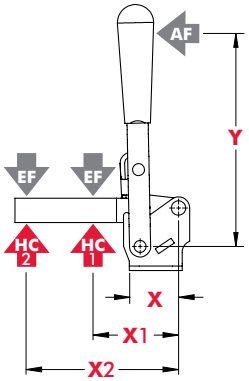

Model	X	X1	X2	Y	‡HC1	‡HC2	‡EF(X1):AF	‡EF(X2):AF
229	[1.53] 38,9	[3.00] 76,2	[6.12] 155,4	[7.06] 179,3	[1000lbf.] 4450N	[500lbf.] 2230N	7:1	3:1

Dimensions shown "mm [inch]" ‡ **HC** = Holding Capacity, **EF** = Exerting Force, **AF** = Applied Force
See page MC-TEC-4 for additional information.

Dimensions and technical information are subject to change without notice

229
Flanged Base
Open Bar

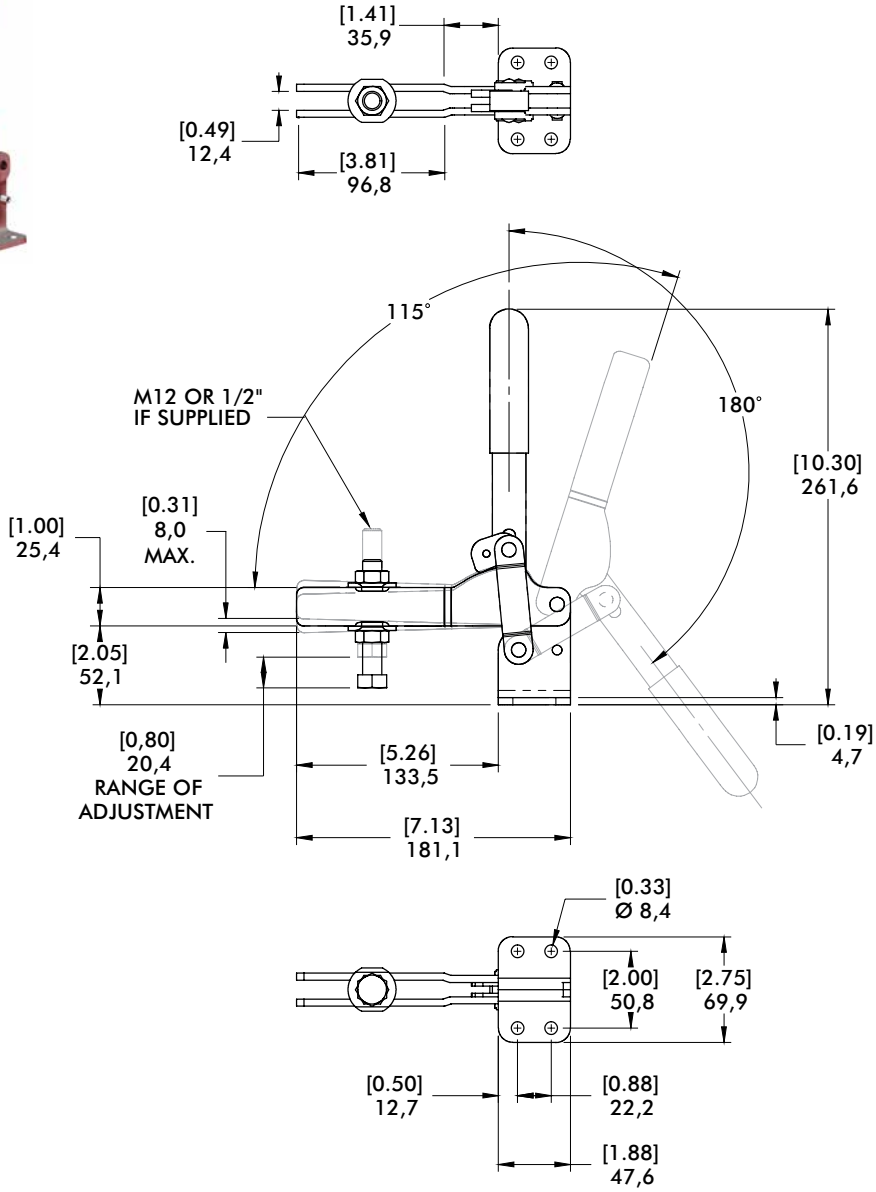

mm [INCH]

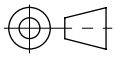

THIRD ANGLE
PROJECTION

500 SERIES

Weldable Vertical Hold Down Clamps | Product Overview

Features:
- Hardened pivot pins and bushings
- Weldable clamping bar
- LSC version with locking spring clip for securing the handle in the open position
- Modular design allows you to set up the clamp to meet application requirements

Applications:
- Welding
- Assembly
- Heavy duty, production clamping applications

Also Available:
See page MC-VHD-46 for accessories

501-**B**ⓘ
Swivel Base

501-**LB**ⓘ
Long Base

503-**MB**
Swivel Base

503-**MLB**
Long Base

503-**MBLSC**ⓘ
Swivel Base with Locking Spring Clip

503-**MLBLSC**ⓘ
Long Base with Locking Spring Clip

505-**MB**
Swivel Base

505-**MLB**
Long Base

505-**MBLSC**ⓘ
Swivel Base with Locking Spring Clip

505-**MLBLSC**ⓘ
Long Base with Locking Spring Clip

506-**MB**
Swivel Base

506-**MLB**ⓘ
Long Base

506-**MBLSC**ⓘ
Swivel Base with Locking Spring Clip

506-**MLBLSC**ⓘ
Long Base with Locking Spring Clip

Model 505-MLB in a robotic welding fixture

ⓘ This item is available upon request

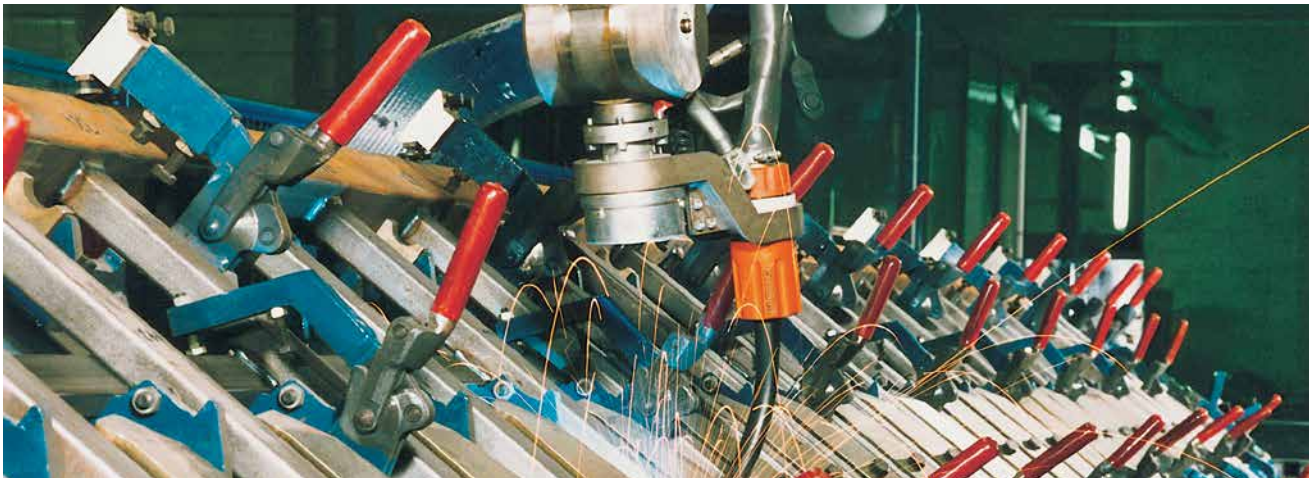

Dimensions and technical information are subject to change without notice

Model	Max. Holding Capacity	Clamp Bar Opening (+10°)	Weight
501-B ⓘ	2000 N [450 lbf]	200°	0,18kg [0.40lbs]
501-LB ⓘ			0,20kg [0.44lbs]
503-MB	7000 N [1575 lbf]		0,70kg [1.54lbs]
503-MLB 503-MBLSC ⓘ			0,80kg [1.76lbs]
503-MLBLSC ⓘ			0,90kg [1.98lbs]
505-MB	11000 N [2475 lbf]		1,40kg [3.09lbs]
505-MLB 505-MBLSC ⓘ			1,50kg [3.31lbs]
505-MLBLSC ⓘ			1,60kg [3.53lbs]
506-MB	22500 N [5060 lbf]		2,60kg [5.73lbs]
506-MLB ⓘ 506-MBLSC ⓘ			2,80kg [6.17lbs]
506-MLBLSC ⓘ			3,00kg [6.61lbs]

ⓘ This item is available upon request

Note:
The clamping bars are made from forged alloy steel and must be heated to 200°C(400°F) prior to welding. We recommend welding the handles, clamp arms, and mounting bases when disassembled. Welding of non pre-heated parts may only be done with the addition of welding fillers.

Clamping Position

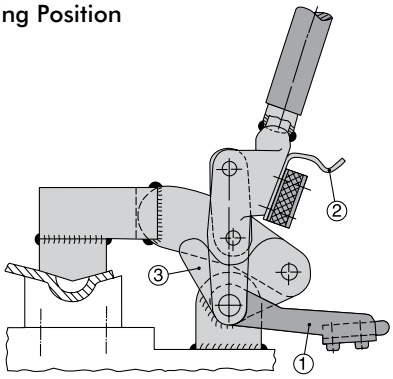

Open Position

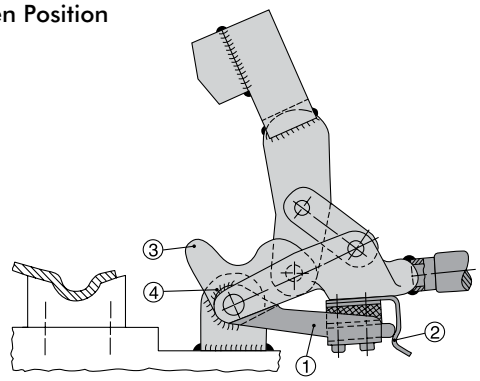

Patented spring latch hold-open device
1. Mount the clamp and place it in the closed position
2. Position the bracket in the leaf spring
3. Swivel the clamp into the open position
4. In this position, weld the bracket with the bar guide feature at point

500 SERIES

Weldable Vertical Hold Down Clamps | Dimensions | -B/-LB/-MB/-MLB/-MBLSC/-MLBLSC

Swivel Base

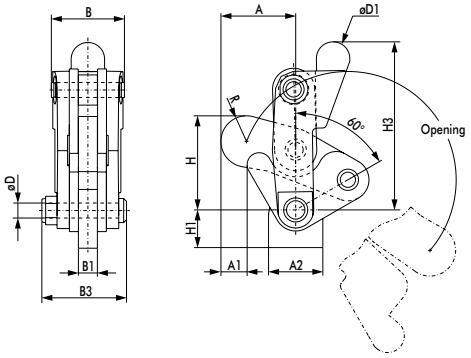

503-**MB**
Swivel Base

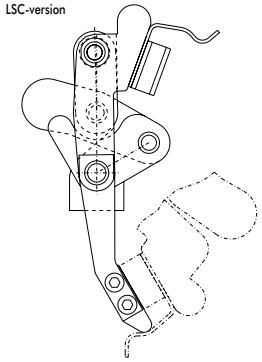

Long Base

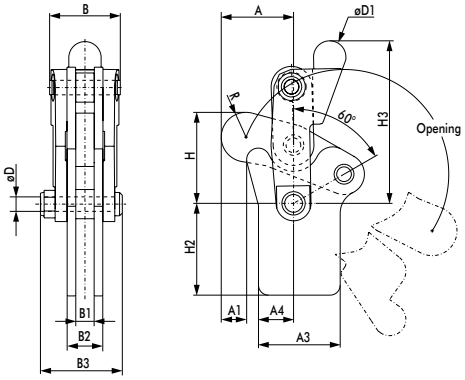

503-**MLB**
Long Base

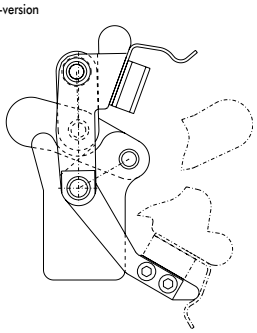

mm [INCH]

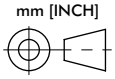

THIRD ANGLE PROJECTION

Swivel Base Dimensions

Model	A	A1	A2	B	B1	B3	ØD	ØD1	H	H1	H3	R
501-B ⓘ	[1.13] 28,6	[0.56] 14,3	[0.75] 19,1	[0.79] 20,0	[0.25] 6,4	[1.09] 27,8	[0.19] 4,8	[0.50] 12,7	[1.12] 28,5	[0.79] 20	[2.20] 56	[0.37] 9,5
503-MB 503-MBLSC ⓘ	[1.54] 39,2	[0.50] 12,8	[1.12] 28,5	[1.52] 38,5	[0.39] 10	[1.82] 46,2	[0.31] 8	[0.69] 17,5	[1.96] 49,8		[3.51] 89,1	[0.53] 13,5
505-MB 505-MBLSC ⓘ	[2.22] 56,5	[1.02] 25,9	[1.38] 35	[1.89] 48	[0.48] 12,3	[2.31] 58,6	[0.37] 9,5	[0.87] 22,2	[2.79] 70,8	[1.10] 28	[4.33] 110,1	[0.72] 18,3
506-MB 506-MBLSC ⓘ	[2.82] 71,7	[1.27] 32,3	[1.97] 50	[1.91] 48,4	[0.63] 16	[2.72] 69	[0.47] 12	[0.94] 24	[3.45] 87,7	[1.29] 32,8	[5.30] 134,6	[0.84] 21,4

Long Base Dimensions

Model	A	A1	A3	A4	B	B1	B2	B3	ØD	ØD1	H	H2	H3	R
501-LB ⓘ	[1.13] 28,6	[0.50] 12,8	[1.13] 28,6	[0.56] 14,3	[0.79] 20	[0.25] 6,4	[0.51] 13	[1.09] 27,8	[0.19] 4,8	[0.50] 12,7	[1.12] 28,5	[1.32] 33,5	[2.21] 56,1	[0.37] 9,5
503-MLB 503-MLBLSC ⓘ	[1.54] 39,2		[1.75] 44,5	[0.75] 19	[1.52] 38,5	[0.39] 10	[0.79] 20	[1.82] 46,2	[0.31] 8	[0.69] 17,5	[1.96] 49,8	[1.97] 50	[3.51] 89,1	[0.53] 13,5
505-MLB 505-MLBLSC ⓘ	[2.22] 56,5	[1.02] 25,9	[2.09] 53	[1.08] 27,5	[1.89] 48	[0.48] 12,3	[0.88] 22,3	[2.31] 58,6	[0.37] 9,5	[0.87] 22,2	[2.79] 70,8	[2.50] 63,5	[4.33] 110,1	[0.72] 18,3
506-MLB	[2.82] 71,7	[1.27] 32,3	[2.58] 65,5	[1.45] 36,9	[1.91] 48,4	[0.63] 16	[1.10] 28	[2.72] 69	[0.47] 12	[0.94] 24	[3.45] 87,7	[3.00] 76,2	[5.30] 134,6	[0.84] 21.4
506-MLBLSC ⓘ														[8.43] 214

Weldable Vertical Hold Down Clamps | Accessories

Features:
- Used with 500 Series Vertical Clamps
- Allows you to customize the clamp to suit application requirements

Applications:
- Welding
- Assembly
- Heavy duty, production clamping applications

Also Available:
See page MC-VHD-43 for clamp linkage

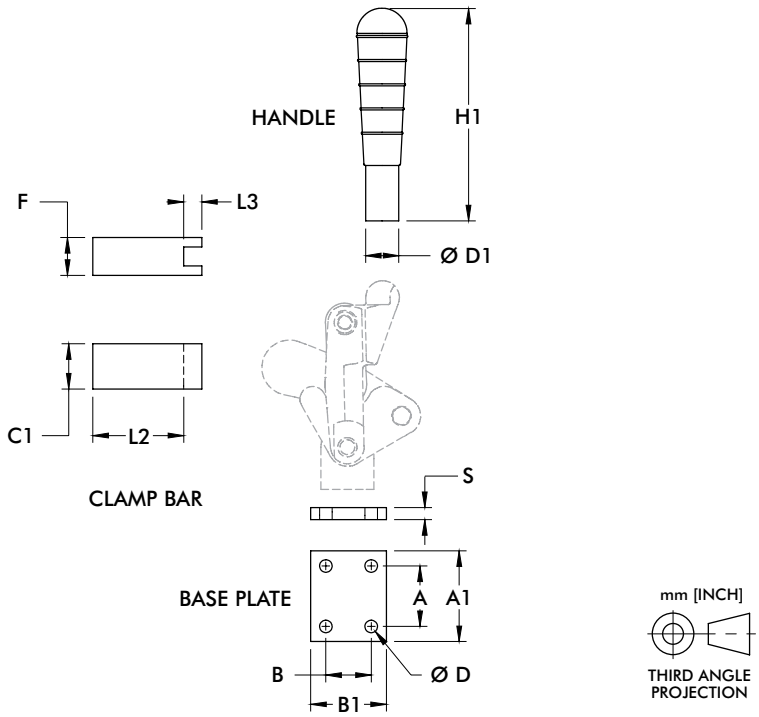

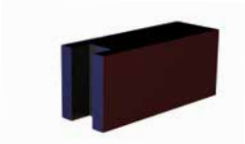
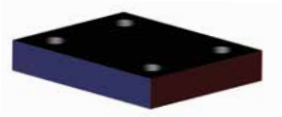

Use with	Part No.	Handle		Clamping Bar				Base Plate					
		ØD1	H1	C1	F	L2	L3	A	A1	B	B1	ØD	S
501	501503ⓘ	6x10	61	-	-	-	-	-	-	-	-	-	-
	501501ⓘ	-	-	15	15	40	10	-	-	-	-	-	-
	503502	-	-	-	-	-	-	25	40	35	50	6.3	8
503	503503-L	Ø18	129.5	-	-	-	-	-	-	-	-	-	-
	503501	-	-	25	20	50	8	-	-	-	-	-	-
	503502	-	-	-	-	-	-	25	40	35	50	6.3	8
505	505503-L	Ø22	159	-	-	-	-	-	-	-	-	-	-
	505501	-	-	30	25	60	12	-	-	-	-	-	-
	505502	-	-	-	-	-	-	40	60	30	50	8.1	8
506	506503-L	Ø28	188	-	-	-	-	-	-	-	-	-	-
	506501	-	-	35	30	75	15	-	-	-	-	-	-
	506502	-	-	-	-	-	-	50	70	45	65	8.1	8

ⓘ This item is available upon request Note: Dimensions shown in millimeters.