Flush-mounted pressure and level transmitters - PZM/VRM series 200/201 - *Superior Precision*

Hengesbach Prozessmesstechnik

CERTIFIED EHEDG EUROPEAN HYGIENIC ENGINEERING & DESIGN GROUP

TYPE EL - ASEPTIC CLASS I
JUNE 2011

HART COMMUNICATION PROTOCOL

Superior Precision
≤± 0,05% FS

FEATURES

- HIGH PRECISION ≤ ± 0.05% FS, TURN DOWN 10, VACUUM SAFE
- FURTHER SCOPE OF FUNCTIONS THANKS TO PROGRAMMABILITY
- OPTIONAL WITH HART® PROTOCOL
- TANK LINEARISATION FOR STANDARD TANK SHAPES AND SPECIAL DESIGNS THANKS TO VOLUMETRIC MEASUREMENT WITH OPUS*i*
- DIAGNOSIS FUNCTION FOR MONITORING OF DEVICES
- COPYING OF DEVICE PARAMETERS WITH EASY TRANSFER
- INTEGRATED ON-SITE DISPLAY OR EXTERNAL OPUS*i* DISPLAY AND OPERATING MODULE FOR PARAMETRISATION AND DISPLAY OF MEASURING VALUES
- APPLICATION STRENGTHS: HIGHLY PRECISE MEASUREMENT OF CONTENT OF PRESSURISED TANKS / VACUUM MEASUREMENTS WITH HIGH TEMPERATURES
- EHEDG-ASEPTIC CERTIFIED MODULAR PROCESS CONNECTION SYSTEM

DESCRIPTION

The PZM and VRM pressure transmitters are suitable for taking pressure and filling level measurements in pipelines and containers. The modular process connection system offers a wide range of connection adapters and helps to cut costs in the long term. The flush-mounted process connection with O-ring seal and stainless steel membrane is certified to EHEDG type EL-ASEPTIC CLASS 1 and is thus predestined for measurements which satisfy even the most stringent hygiene requirements.

The sensor measuring ranges of the piezoresistive vacuum-proof measuring cell with stainless steel membrane of the PZM pressure transmitters range from -1/0…0.35bar to -1/0…100bar. The VRM pressure transmitters feature a capacitive measuring cell with ceramic membrane and are designed to measure from -1/0…+4bar to -1/0…+70bar or 0…4bar to 0…70bar Given their high overload protection, they are ideal for taking measurements under conditions where pressure shocks and cavitation are possible. Special measuring ranges are possible for both versions.

HENGESBACH GMBH & CO. KG · Schimmelbuschstr. 17 · 40699 Erkrath, Germany · Tel. +49 (0) 21 04/30 32-0 · Fax +49 (0) 21 04/30 32-0 · www.hengesbach.com

Flush-mounted pressure and level transmitters - PZM/VRM series 200/201 - *Superior Precision*

Hengesbach Prozessmesstechnik

All the pressure transmitters in series 200/201are highly precise and have been developed for difficult tank content measurements and, in particular, for applications with constantly high temperatures of up to 200°C. Furthermore, using the on-site display with series 200 and the display and operating module OPUS *i* in series 201, the pressure transmitters can be simply read out, configured and diagnosed. With the EASY TRANSFER function, the configuration data can be copied via the OPUS*i* module onto other pressure transmitters in series 201. This makes commissioning easier for the same applications. The option of programming in tank dimensions for standard tank designs as well as for special tanks using the volumes calculated by means of volumetric measurement means exact filling levels and tank content can be shown directly.

In addition to the features of the 200/201 series, the pressure transmitters in the 200H/201H series boast an integrated HART® modem. This also enables remote configuration and evaluation of the transmitters using the HART® protocol.

TECHNICAL DATA

General details								
Device type / measuring principle	PZM 200/201/200H/201H: piezoresistive VRM 200/201/200H/201H: capacitive							
Input								
Measuring ranges	PZM 200/201/200H/201H				VRM 200/201/200H/201H			
Standard nominal measuring ranges [bar]	relative	OP	absolute	OP	relative	OP	absolute	OP
OP = overload protection [bar]	-1/0...0.35	1			-1/0...4	25	0...4	25
	-1/0...1	3	0...1	3	-1/0...10	40	0...10	40
	-1/0...2.5	8	0...2.5	8	-1/0...20	40	0...20	40
Special measuring ranges are available on request.	-1/0...5	15	0...5	15	-1/0...40	60	0...40	60
All measuring cells are vacuum-proof	-1/0...10	30	0...10	30	-1/0...70	105	0...70	105
	-1/0...30	90	0...30	90				
	-1/0...100	250	0...100	250				
Setting the measuring ranges	Via the keypad of the OPUS*i* display and operating module / via the integrated on-site display Optional: via HART® (for the range of functions see the operating instructions)							
Setting ranges	Start the measuring zero: 0...90% of the sensor's nominal measuring span Measuring span span: 10...100% of the sensor's nominal measuring span TD=10							
Burst pressure DIN16086	≥ 4-fold measuring range							
Output								
Output signal	2-wire: 4...20mA with a test circuit connection in the device Optional: 4...20mA HART®							
Fault signal	Optional: 3.8mA, 22mA, hold (i.e. holding the last value)							
Current limitation	3.85mA and 21.5mA (normal operation)							
Integration time	Continuously selectable between 0 and 300s (setting time after a pressure leap)							
Measuring accuracy								
Reference conditions	acc. to DIN IEC 770							
Linearity, hysteresis and repeatability as per the limit point method DIN IEC 770	≤ ± 0.05% of the sensor's nominal measuring range							
Activation time	< 5s (the device will carry out a self-test.)							
Setting time (without damping)	< 200ms							
Long-time drift	≤ 0.2% of the span per year							
Thermal hysteresis	≤ ± 0.75% beginning of the measuring range / ≤ ± 0.8% end of the measuring range (VRM) ≤ ± 0.2% of the sensor's nominal measuring range / 10K (-20 to +80°C) from 4bar (PZM) ≤ ± 0.3% of the sensor's nominal measuring range / 10K (-20 to +80°C) up to 0.6bar (PZM)							
Conditions of use								
Installation position / calibration position	Any position / standing vertically							
Medium temperature	PZM: T1: -40...+125°C (140°C over one hour at the most) T2: -40...+200°C (high-temperature version) VRM: -40...+140°C							
Ambient storage temperature	Type 201/201H: -40...+85°C Type 200/200H: -30...+75°C (Below -20°C cable breakage might occur and the display's function may be impaired.)							
Protection class acc. to EN60529	IP 67 and IP 69K							
Electromagnetic compatibility	Sensitivity against interference: acc. to DIN IEC 61000-6-2 Interference radiation: acc. to DIN IEC 61000-6-4							

HENGESBACH GMBH & CO. KG · Schimmelbuschstr. 17 · 40699 Erkrath, Germany · Tel. +49 (0) 21 04/30 32-0 · Fax +49 (0) 21 04/30 32-0 · www.hengesbach.com

Flush-mounted pressure and level transmitters - PZM/VRM series 200/201 - *Superior Precision*

Hengesbach Prozessmesstechnik

TECHNICAL DATA

Construction	
Electrical connection	- Standard: cable screw connection M16x1.5, nickel-plated brass, stainless steel available on request - Optional: round plug-in connector M12x1, nickel-plated brass, stainless steel available on request - Optional: angle plug acc. to EN 175301-803 - Optional: reference cable
Process connection	- Membrane, flush-welded on the front, CrNiSt, other materials available on request - EHEDG type EL-ASEPTIC CLASS 1, certified connection system PZM / VRM with press screw M38x1.5 and elastomer sealing - Process seal EPM (FDA) (temperature range: -20...+150°C) - Process seal FPM (FDA) (temperature range: -40...+200°C)
Materials	- Field housing / lid: CrNiSt 1.4301 (304) - Housing seal: FPM (Viton®) - Pressure compensation element: polyamide - Inspection gauge (type 200/200H): polycarbonate - Process connection / connection adapter: CrNiSt 1.4404 (316L) - Process membrane: CrNiSt 1.4435/1.4404 (316L) - Locking screw (type 201/201H): CrNiSt 1.4301 (304) - Reference cable: 5-wire with reference tube: PUR (recommended: 80m maximum)
Filling fluid	PZM: silicon oil (FDA) VRM: medical mineral oil (FDA)
Display and operation	
Display	LCD, 4-digit numerical display and 5-digit alphanumerical display Type 200/200H: integrated on-site display (cannot be separated from device) Type 201/201H: external OPUS*i* display and operating module
Displayable units	Pressure: mbar, bar, psi, Pa, mH_2O, mmHg, Torr, atm, at, kg/cm² Temperature: °C, °F, K, °R, °Ré Volume: l, hl, dm³, m³, ft³, US gal, UK gal, US bl, UK bl Mass: kg, t, lbs, tn. sh., tn. l.
Additional displays	Output current in mA or % (in relation to the span)
Operation	200/200H: via the configuration menu with the integrated on-site display 201/201H: via the configuration menu with the external OPUS*i* display and operating module
Auxiliary energy resources	
Power supply / burden	12-36V DC, max. burden: (Vsupply – 12V) / 24mA, with HART® resistance min. 18V DC
Accessories 200 series	
OPUS*i* display and operating module	external display and operating module, CrNiSt, IP 67, 41x70 mm, 1 m connection cable and M12x1 round plug-in connector, integrated memory for the parameter transfer to other devices (downwardly compatible with existing devices of the 100 series, but without a copying function between the transmitter and the display and operating module)
Certificates	Calibration certificate Declaration of conformity Material inspection certificates as per EN 10204 EHEDG certificate
Process connection adapter	See order information

DIMENSIONED DRAWINGS (dimensions in mm)

PIEZOMESS 200 ... _K(M)

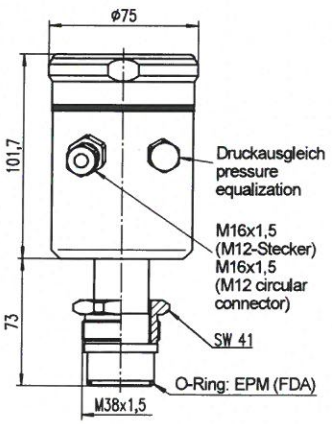

Feldgehäuse mit integrierter Anzeige (Edelstahl, IP67 + IP69K EN 60529)
field-housing with integrated display (stainless steel, IP67 + IP69K EN 60529)

VARIMESS 200 ... _K(M)

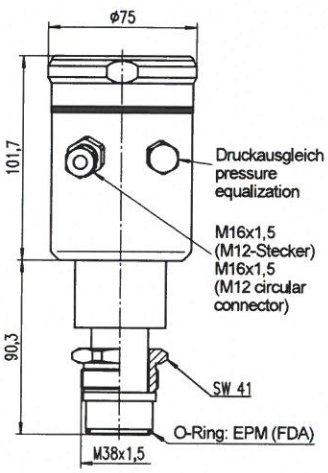

Feldgehäuse mit integrierter Anzeige (Edelstahl, IP67 + IP69K EN 60529)
field-housing with integrated display (stainless steel, IP67 + IP69K EN 60529)

PIEZOMESS / VARIMESS 201 ... _K(M)

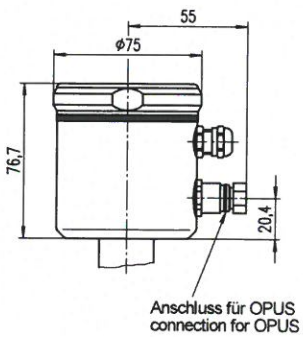

Feldgehäuse für OPUS (Edelstahl, IP67 EN 60529)
field-housing for OPUS (stainless steel, IP67 EN 60529)

HENGESBACH GMBH & CO. KG · Schimmelbuschstr. 17 · 40699 Erkrath, Germany · Tel. +49 (0) 21 04/30 32-0 · Fax +49 (0) 21 04/30 32-0 · www.hengesbach.com

Flush-mounted pressure and level transmitters - PZM/VRM series 200/201 - *Superior Precision*

Hengesbach Prozessmesstechnik

DIMENSIONED DRAWINGS (dimensions in mm)

Prozessanschlussadapter: (optional mit 3 Leckagebohrungen; weitere Ausführungen auf Anfrage)
adapters for process connection: (optional with 3 leakage holes; other constructions on request)

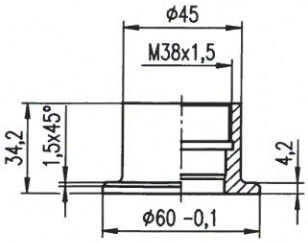

PEM4FPZM
Einschweißmuffe VPM Ø60 (Tank)
welding socket VPM Ø60 (tank)

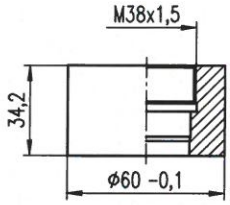

PEM5FPZM
Einschweißmuffe VPM Ø60 (Tank)
welding socket VPM Ø60 (tank)

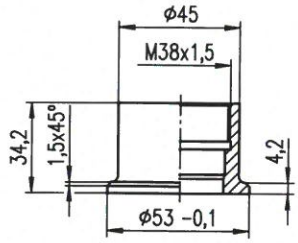

PEM3FPZM
Einschweißmuffe VPM Ø53 (Tank)
welding socket VPM Ø53 (tank)

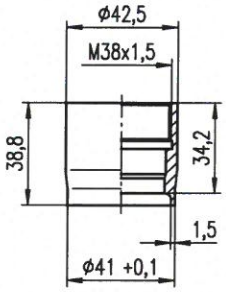

PEM9FPZM
Einschweißmuffe VPM - Rohr DN40
welding socket VPM - pipe DN40

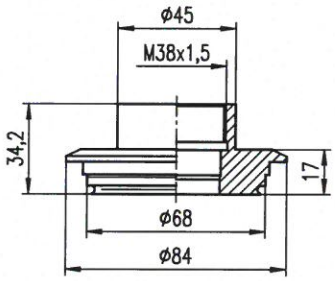

PVA6FPZM
VARIVENT-Flansch Ø68
VARIVENT-flange Ø68

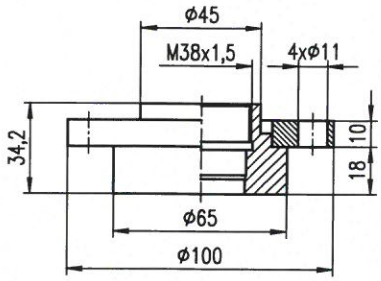

PDR6FPZM
DRD-Flansch Ø65
DRD-flange Ø65

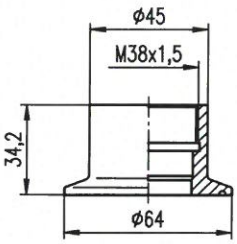

PCL5FPZM
Clamp DIN 32676 - DN50

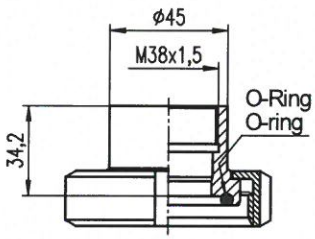

PBS...FPZM
Bundstutzen DIN 11864-1
Form A; DN40, DN50
collar nozzle DIN 11864-1
form A; DN40, DN50

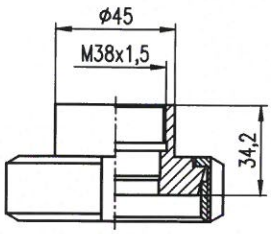

PMN...FPZM
Kegelstutzen DIN 11851
conical nozzle DIN 11851
DN40, DN50, DN65

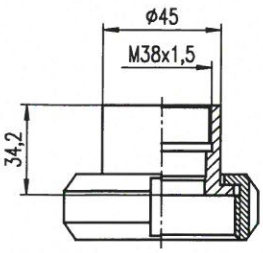

PSN...FPZM
SMS-Bundstutzen DN38
SMS collar nozzle DN38

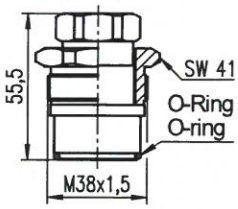

PVS1FPZM
Verschlussstopfen PZM
closing plug PZM

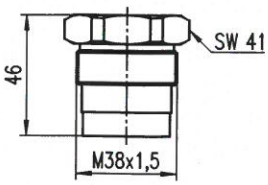

PED9FPZM
Einschweiß-Dummy PZM
welding dummy PZM

HENGESBACH GMBH & CO. KG · Schimmelbuschstr. 17 · 40699 Erkrath, Germany · Tel. +49 (0) 21 04/30 32-0 · Fax +49 (0) 21 04/30 32-0 · www.hengesbach.com

ORDER INFORMATION for accessories PZM/VRM modular system series 200/201 (Please order separately)

Item no.: Z-PEM4FPZM

Welding socket PEM4FPZM
for modular connection system
PZM, VRM
with collar, for welding in tanks
d=60mm, with internal thread
M38x1,5; material. stst 316L
Please order separately
WAZ3.1 acc. EN10214/ADW2 and
re-stamping certificate

Item no.: Z-PEM5FPZM

Welding socket
for modular connection system
PZM, VRM
for welding in tanks
cylindric d=60mm
(without welding collar)
with inner thread M 38x1,5,
material. stst 316L

Item no.: Z-PEM3FPZM (for tubes>DN50)

welding socket PEM3FPZM
(for tubes> DN50)
modular connection system PZM
to fit tubes >50DN and tanks
diameter d=53mm with M38x1,5
internal thread
material stst 316L
please order separately
WAZ3.1 acc. EN10214/ADW2 and
re-stamping certificate

Item no.: Z-PEM9FPZM

Weld-on socket for tubes
PEM9FPZM
for modular process connection PZM
for welding on tubes DIN11850
Row 2 ; >DN40
intended use: Pressure transmitter
Type PZM, VRM;
with M 38x1,5 internal thread
material./ Wkst. 1.4404 / 316L
Please order separately:
WAZ 3.1 acc. EN 10204/ADW2 &
re-stamping certificate

Item no.: Z-PVA6FPZM

PZM-process adapter VARIVENT®
d=68mm (form N) for DN 40-125
universal adapter for the modular
connecting system PZM, VRM
VARIVENT®-flange
diameter d=68mm, PN40,
in mat.. 316L
for tubes DN40-125
Gaskets are not within the scope
of supply

Item no.: Z-PDR6FPZM

Process adapter DRD-flange, d=65
universal adapter for modular
system PZM,
DRD adapter d=65mm,
PN40 with flange,
material stst 316L

Item no.: Z-PCL5FPZM

Process adapter Clamp
DIN 32676 DN50
universal adapter for transmitter
system PZM,
Clamp DIN32676 DN50, material 316L
for use: PZM,VRM
- without sealing and bracket -

Item no.: Z-PBS_FPZM

Process adapter DIN 11864-1,
Form A for tubes DIN 11866,
Tube A (DIN11850), DN 40
universal adapter for modular
system PZM
collar with groove nut DIN11864-1
DN40/PN25, material. 316L

Item no.: Z-PMN_FPZ

Process adapter for PZM-system
with union nut DIN 11851
DN 40 / DN50 / DN60 ...
PN40, DIN 11851, material st.st. 316L
for use with system PZM/VRM/
MDM7887

Item no.: Z-PSN_FPZM

Process adapter
with union nut acc. SMS Norm
DN38 (1,1/2") PN40
Universal adapter for modular
PZM system
Material ststs 316L

Item no.: Z-PVS1FPZM

Plug for PZM adaptors
with fixing bolt M38x1,8
material stst 316L
O-ring in material EPM

Item no.: Z-PED9FPZM

Welding dummy
material Brass 2.0401
for welding sockets type PZM/VRM

HENGESBACH GMBH & CO. KG · Schimmelbuschstr. 17 · 40699 Erkrath, Germany · Tel. +49 (0) 21 04/30 32-0 · Fax +49 (0) 21 04/30 32-0 · www.hengesbach.com

ELECTRICAL CONNECTION

The standard electrical connection is via a cable screw connection M16x1.5. On removing the device lid, the connection is created using screw terminals. The connection diagram in the transmitter head can be seen in the figure below (figure shows the connection for a type 200H/201H device with HART®):

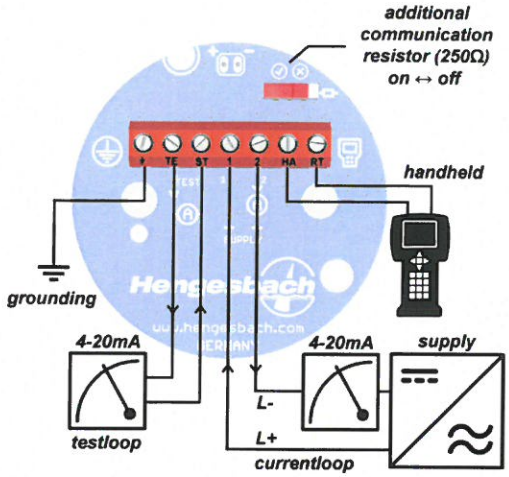

The supply voltage is connected via the two terminals 1 (+) and 2 (-). The current flowing in this loop represents the existing measuring value.

The terminals **TE** and **ST** provide a test circuit connection with which the actual loop current can be measured without interruption using an ammeter.

An operating device can be connected to terminals **HA** and **RT** **for on-site communication via the HART®protocol.** An additional communication resistor can be added via a sliding switch.

The ground terminal is for potential equalisation between the measuring device and the measuring point.

Alternative connection options are a round plug-in connector M12x1, an angle plug acc. to EN 175301-803 as well as a factory-fitted reference cable with integrated vent capillary. The reference cable comes in lengths of between 1...80m The electrical configurations are listed in the following:

Round plug-in connector M12x1	Angle plug acc. to EN 175301-803	Connected reference cable
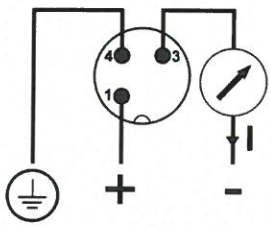	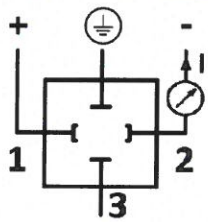	Brown: Supply + Black: Supply - White: Earth Shield: Earth

CONNECTION FOR HART® COMMUNICATION

For communication via the HART® protocol a minimum burden resistor of 250Ω is required. The following figures show the various options for correct connection. The transmitters can be parametrised via the HART®protocol using universal and pressure transmitter-specific common practice commands.

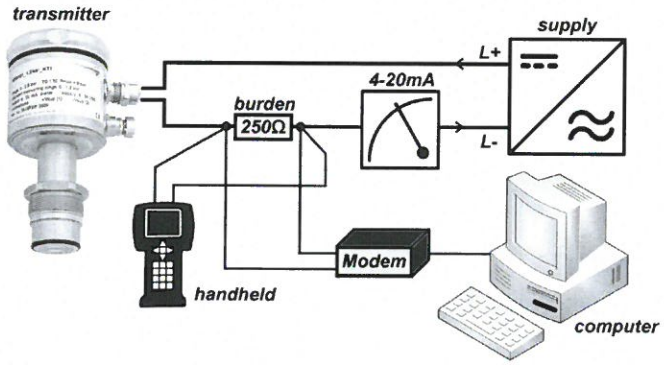

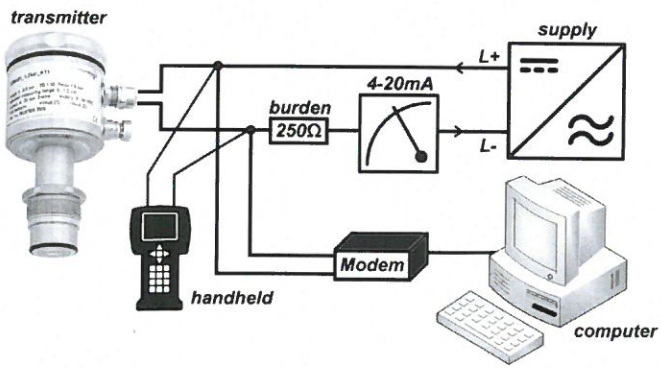

HENGESBACH GMBH & CO. KG · Schimmelbuschstr. 17 · 40699 Erkrath, Germany · Tel. +49 (0) 21 04/30 32-0 · Fax +49 (0) 21 04/30 32-0 · www.hengesbach.com

Flush-mounted pressure and level transmitters - PZM/VRM series 200/201 - *Superior Precision*

Hengesbach Prozessmesstechnik

ORDER INFORMATION for PIEZOMESS (PZM) and VARIMESS (VRM)

Electronics

200	4...20mA, integrated LCD display, TD 10
201	4...20mA, can be operated with OPUS*i*, TD 10
200H	4...20mA, HART® protocol, integrated LCD display, TD 10
201H	4...20mA, HART® protocol, can be operated with OPUS*i*, TD 10

Sensor's measuring range / pressure type

PZM

C	0.35bar	max. overload 1bar
E	1bar	max. overload 3bar
G	2.5bar	max. overload 8bar
J	5bar	max. overload 15bar
K	10bar	max. overload 30bar
M	30bar	max. overload 90bar
Q	100bar	max. overload 250bar

R	Relative pressure, overpressure (0...xxx bar)
N	Relative pressure, vacuum (-1...xxx bar)
A	Absolute pressure

VRM

H	4bar	max. overload 25bar
K	10bar	max. overload 40bar
L	20bar	max. overload 40bar
N	40bar	max. overload 60bar
P	70bar	max. overload 105bar

R	Relative pressure, overpressure (0...xxx bar)
N	Relative pressure, vacuum (-1...xxx bar)
A	Absolute pressure

Electrical connection

K	Cable screw connection M16x1.5
M	Round plug-in connector M12x1
R05	Reference cable, 5m, securely fixed
R10	Reference cable, 10m, securely fixed
R15	Reference cable, 15m, securely fixed
R20	Reference cable, 20m, securely fixed
R25	Reference cable, 25m, securely fixed
RXX	Reference cable, length in excess of 25m is to be stated in plain text (max. 80m)

Run options (only with PZM)

T1	Normal temperature option
T2	High temperature option for medium temperatures of up to 200°C

PZM						**Nominal measuring range if different from sensor's measuring range**
VRM						**Nominal measuring range if different from sensor's measuring range**

HENGESBACH GMBH & CO. KG · Schimmelbuschstr. 17 · 40699 Erkrath, Germany · Tel. +49 (0) 21 04/30 32-0 · Fax +49 (0) 21 04/30 32-0 · www.hengesbach.com

Hengesbach Prozessmesstechnik

ORDER INFORMATION for PZM and VRM accessories

Process connection adapter (please order separately)	Article number
Clamp DIN 32676, DN50, 1.4404 (316L)	Z-PCL5FPZM
DRD flange Ø 65mm; 1.4404 (316L)	Z-PDR6FPZM
Conical coupling with a groove union nut DIN 11851, DN40/PN40, 1.4404 (316L)	Z-PMN4FPZM
Conical coupling with a groove union nut DIN 11851, DN50/PN25, 1.4404 (316L)	Z-PMN5FPZM
Conical coupling with a groove union nut DIN 11851, DN65/PN25, 1.4404 (316L)	Z-PMN6FPZM
Male thread DIN 11851, DN50/PN16, 1.4404 (316L)	Z-PMG4FPZM
Male thread DIN 11851, DN50/PN25, 1.4404 (316L)	Z-PMG5FPZM
Female thread with a groove union nut DIN 11864-1, DN40/PN40, 1.4404 (316L)	Z-PBS4FPZM
Female thread with a groove union nut DIN 11864-1, DN40/PN40, with 3 leakage holes, 1.4404 (316L)	Z-PBS4LPZM
Female thread with a groove union nut DIN 11864-1, DN50/PN25, 1.4404 (316L)	Z-PBS5FPZM
SMS female thread with a groove union nut, DN38 (DN1½"), 1.4404 (316L)	Z-PSN3FPZM
SMS female thread with a groove union nut, DN51 (DN2"), 1.4404 (316L)	Z-PSN5FPZM
VARIVENT® flange Ø 68mm, DN40-125/PN40, 1.4404 (316L)	Z-PVA6FPZM
VARIVENT® flange Ø 68mm, DN40-125/PN40, with 3 leakage drills, 1.4404 (316L)	Z-PVA6LPZM
welded socket Ø 53mm, 1.4404 (316L)	Z-PEM3FPZM
welded socket Ø 60mm, with welded collar, tank installation, 1.4404 (316L)	Z-PEM4FPZM
welded socket Ø 60mm, without welded collar, tank installation, 1.4404 (316L)	Z-PEM5FPZM
welded socket Ø 60mm, without welded collar, with 3 leakage drills, tank installation, 1.4404 (316L)	Z-PEM6FPZM
welded socket for pipes DIN 11850, row 2, DN40, 1.4404 (316L)	Z-PEM9FPZM
welded socket for pipes DIN 11850, row 2, DN40, with 3 leakage drills, 1.4404 (316L)	Z-PEM9LPZM
welded socket for pipes DIN 11850, row 2, DN50, 1.4404 (316L)	Z-PEM3FPZM
Other process connection	on request

Accessories/assembly parts (please order separately)	Article number
OPUS*i* external operating module, for 201/201H, electronics, 1.4301 (304)	OPUS*i*
O-ring 28x2.5 made of EPM (FDA)	ZOB2FPZM
DRD weld-in block flange for process connection PDR6FPZM, 1.4435 (316L)	ZEB1FDRD
Flat seal made of EPDM for DRD flange	ZFA1FDRD
Flat seal made of FPM (Viton®) for DRD flange	ZFC1FDRD
Flat seal made of PTFE (Gore™) for DRD flange (FDA)	ZFD1FDRD
4 x fastening screws for DRD flange, 1.4301 (304)	ZDS4FDRD
Pressure compensation element, "Gore™ prevent", IP69K	ZDAE69K
Locking screw for OPUS*i* connection with series 201/201H, 1.4301 (304)	ZVS1F101
Reference cable made of PUR with pressure compensation capillary	ZKP1FDMU
Approval certificate 3.1 acc. to EN 10204 for material composition	WZ31M
Approval certificate 3.1 acc. to EN 10204 for surface quality ≤ 0.8µm or standard	WZ31R
Certificate of compliance 2.1 acc. to EN 10204	WZ2.1
Test report 2.2 acc. to EN 10204	WZ2.2
USB - HART® configuration interface incl. software "PactWare" and HART® DTM	KONFHART

Please observe the permissible nominal pressure of the process connection selected.
All specifications and certifications specified are only guaranteed when Hengesbach original components are used.
Our devices are subject to constant development; subject to technical modification.

HENGESBACH GMBH & CO. KG · Schimmelbuschstr. 17 · 40699 Erkrath, Germany · Tel. +49 (0) 21 04/30 32-0 · Fax +49 (0) 21 04/30 32-0 · www.hengesbach.com