03EPP-E

EUROPRESS

HIGH PRESSURE HYDRAULICS

OLEODINAMICA AD ALTA PRESSIONE
HOCHDRUCKHYDRAULIK
HYDRAULIQUE A HAUTE PRESSION

HYDRAULIC CYLINDERS
HYDRAULIC PUMPS
VALVES AND ACCESSORIES FOR HYDRAULIC SYSTEMS
HYDRAULIC TOOLS
AUTOMOTIVE EQUIPMENT

Euro Press Pack

HIGH PRESSURE HYDRAULICS

EUROPRESS

INDEX

Product summary ..... p. 3
The Company 4
Hydraulic cylinders – specific features 8
How to choose a cylinder 9

HYDRAULIC CYLINDERS

CGG High tonnage cylinders with safety ring nut – load return 12
CGR Low profile cylinders with safety ring nut – load return 16
CGS High tonnage cylinders – load return 18
CMC Extra flat cylinders – spring return 22
CMF Steel and aluminium hollow piston cylinders – spring return 24
CMI Multi-purpose cylinders – spring return 26
CML Aluminium cylinders, spring return 28
CMP Low profile cylinders – spring return 30
CMT Pulling cylinders in steel and aluminium – spring return 32
COD Industrial cylinders, double acting 34
COF Cylinders with hollow piston, oil return 36
COI Multipurpose cylinders, oil return 38
COS High tonnage cylinders, oil return 40

How to choose a pump 44
Components of an hydraulic system 46

HYDRAULIC PUMPS

PF Lightweight alloy foot pumps 48
PL Lightweight hand pumps 49
PP Hand Pumps for diversified applications 52
PS Steel hand pumps 53
PV Steel hand pumps with large oil delivery 54
PVL Steel hand pumps with large oil delivery and lighweight alloy reservoir 55
MLP Air-hydraulic pumps 56
MC Micro hydraulic power packs 60
MD Midi hydraulic power packs 62
MDW Hydraulic power packs for torque wrenches 65
ME-MM-MP-MS Modular hydraulic power packs 67
ME/MM-PP Modular Power Packs for geotechnical structural tests 69
SYNCHROLIFT Synchronous lifting system 78
SPLIT-FLOW Synchronous lifting system 80

VALVES AND ACCESSORIES FOR HYDRAULIC SYSTEMS

G Pressure gauges and gauge blocks 82
K Quick couplers 83
R Manifolds – Fittings 85
S High pressure hoses 88
VL (VLE-VLS)-VR In-line valves – Regulating valves 89
ZOH Hydraulic oil 94

HYDRAULIC TOOLS

UE Pullers and extractors 96
UML Lightweight aluminium jacks 100
UMP Universal hydraulic jack Primus 102
UMS Steel hydraulic jacks 103
UJ Eurojack head and toe lifting jack 104
UA Flange spreaders 105
UD Hydraulic spreaders 106
US Nut cutters 107
UW Torque wrenches 108
UT Bolt tensioners 111
UP Presses 115
UB Pipe benders 116
UL Load cells 117

AUTOMOTIVE EQUIPMENT

UGC Mobile folding crane 119
UGJ Trolley jacks 120
UGT Hydraulic lifting tables 121
UMB Hydraulic bottle jacks 122

EUROPRESS SPECIAL PRODUCTS 123

USEFUL PAGES 126

EURO PRESS PACK • Via M. Disma, 87 • 16042 Carasco (GE) ITALY
Tel. 0039 0185 35 271 • Fax 0039 0185 35 11 38

This catalogue covers hydraulic high pressure equipment and components, also in customised versions, for any kind of use.
This is an offer from specialists to specialists.

HYDRAULIC CYLINDERS 11

HYDRAULIC PUMPS 47

VALVES AND ACCESSORIES FOR HYDRAULIC SYSTEMS 81

HYDRAULIC TOOLS 95

AUTOMOTIVE EQUIPMENT 118

EUROPRESS SPECIAL PRODUCTS 123

EURO PRESS PACK • Via M. Disma, 87 • 16042 Carasco (GE) ITALY
Tel. 0039 0185 35 271 • Fax 0039 0185 35 11 38

THE COMPANY

OUR JOURNEY

We can say that the journey of **EURO PRESS PACK** began in 1919, with the creation of the **RAFFAELE RIMASSA COMPANY** who traded high-pressure hydraulic products in all Europe. The company was taken over by EURO PRESS PACK in 1993 and the group is currently a worldwide leader in the manufacturing of high-pressure hydraulic components from 700 to 4000 bars, and has renewed its trademark RARIPRESS as a result of a complete re design of its product range.

Our effort in following the most advanced technology innovations in terms of quality, safety, and reliability are certified since 1996, year in which we were awarded the **ISO 9001 Quality System Certification**, and more recently in 2008 with the **ISO 14001 Quality System Certification**.

NITREG ONC

EURO PRESS PACK products are the only ones in the sector treated with the **Nitreg® ONC®** process which, for many years now, has been carried out exclusively within our plants.

This process is a thermo-chemical treatment applied to steel, that starts with the liquid nitriding phase followed by an oxidation phase, causing a change in the steel's superficial chemical structure. This alteration makes steel exceptionally hard and resistant to corrosion. The already enhanced resistance is further strengthened with the application of a special oil that coats the treated surfaces and makes them immune to corrosion (tests conducted in saline smoked rooms show up to 300 hours of resistance to corrosion according to ASTM B117).

Our products, treated with this process, are therefore especially suitable for applications with high risks of corrosion and mechanical wear.

The black colour of all EUROPRESS products is a direct result of the last phase of this unique treatment and has come to symbolize our long lasting effort towards the pursuit of quality.

EURO PRESS PACK • Via M. Disma, 87 • 16042 Carasco (GE) ITALY
Tel. 0039 0185 35 271 • Fax 0039 0185 35 11 38

OUR STRUCTURE

E.P.P. EURO PRESS PACK SpA
Our productive plants are located in Carasco, near the city of Genoa in northern Italy, within a strategic distance from the Genoa port and international airport.
The factory covers a surface of around 6000 sq.m and includes, as well as the productive plants and commercial and technical offices, research departments and a well-stocked warehouse.

EUROPRESS DEUTSCHLAND GmbH (ex E.P.P. ROEMHELD)
Once called E.P.P. ROEMHELD it is the trading company in charge of the German market, located in Nuremberg, Germany, it resulted from the trade agreement between EUROPRESS and the renowned German Group ROEMHELD, specialized in the manufacturing of hydraulic blocking and industrial automation.
The firm is currently independent and works as an essential strategic logistic junction between North-South and East-West of Europe, also thanks to its short distance from the international airports of Nuremberg and Munich.

E.P.P. MAGNUS Ltd
It is the trading company responsible for the United Kingdom market, situated in Norwich near the international airport and only a few km from the North Sea.

EURO PRESS PACK • Via M. Disma, 87 • 16042 Carasco (GE) ITALY
Tel. 0039 0185 35 271 • Fax 0039 0185 35 11 38

THE COMPANY

OUR VALUES

The EUROPRESS Group has achieved its leadership in the sector of hydraulic high-pressure components thanks to the following values, which have characterized the company from the beginning:

Know-how
Motivated, constantly trained and extensively experienced employers, with a tenacious will to solve whatever problems are faced with innovative and advanced solutions, we ensure our know-how is solid but at the same time flexible.

Innovation
Productive plants are regularly renewed and provided with automated state of the art machines.

Quality
Our exclusive Nitreg ONC® treatment, which makes steel exceptionally hard and resistant to corrosion, is delivered with no price increase on all our range of products. Rigorous screening tests are performed initially on selected components and then on 100% of finished products. To ensure the highest standard all steel is subject to quality control before and after heat treatments.

Autonomy
Our entire production is carried out internally, without no third party intervention, to enable optimum control of quality, cost and service.

Flexibility
In addition to the standard range, tailored products following technical details supplied by the client can be designed and manufactured in a short time.
The EUROPRESS production is easily adaptable to orders of any size.

Internationality
Our sales offices are in all the major Markets, situated in logistically strategic areas.

Customer focus
All standard products are always in stock, packing and markings are designed to optimize storage; logistics solutions are fast and low-priced, and the distribution network acts efficiently anywhere in the world. Our customers can take advantage of ongoing assistance as well as technical and commercial training, either at their own premises or at those of EUROPRESS; an expert design team is always available for the creation of new products produced specifically for individual applications.

EURO PRESS PACK • Via M. Disma, 87 • 16042 Carasco (GE) ITALY
Tel. 0039 0185 35 271 • Fax 0039 0185 35 11 38

OUR MISSION

EPP values are the milestones of a customer-oriented philosophy that has as its main purpose to **maximize the satisfaction of all clients' requirements**; the company mission is therefore to be always a reliable partner in terms of production, and tailored assistance.

EURO PRESS PACK • Via M. Disma, 87 • 16042 Carasco (GE) ITALY
Tel. 0039 0185 35 271 • Fax 0039 0185 35 11 38

EUROPRESS

SPECIFIC FEATURES

The manufacturing program of 700 bar components is based on innovative technology and on our longstanding experience in high pressure hydraulics.

The ideal choice of materials combined with surfaces treated and protected against corrosion makes EPP products suitable for use in harsh environments.

Furthermore, EUROPRESS cylinders can withstand off-centred and side load forces up to 8% of their nominal capacity.

Most of our models are in compliance with ANSI (American National Standard Institute) B30.1 Standard.

1-2-3 Cylinder body
The cylinder body, piston and end of stroke nut are in high quality tempered steel and have been treated with a special nitriding process so that these parts have a high wear resistance and are corrosion protected; they have a long outdoor service life even in sea-water and aggressive atmospheres.

4 Wiper
The wiper prevents contamination and thus increases the service life of the cylinder.

5 Return spring
This spring ensures fast piston retraction irrespective of the cylinder position.

6 Seal
The compact seal provides good resistance to wear and extrusion.

7 Saddle
The saddle is in high tensile and nitrided steel and thus prevents deformation of the piston rod.

8 Quick coupler
The quick coupler mounted on all cylinders (except COD cylinders), is fitted with a dust cap.

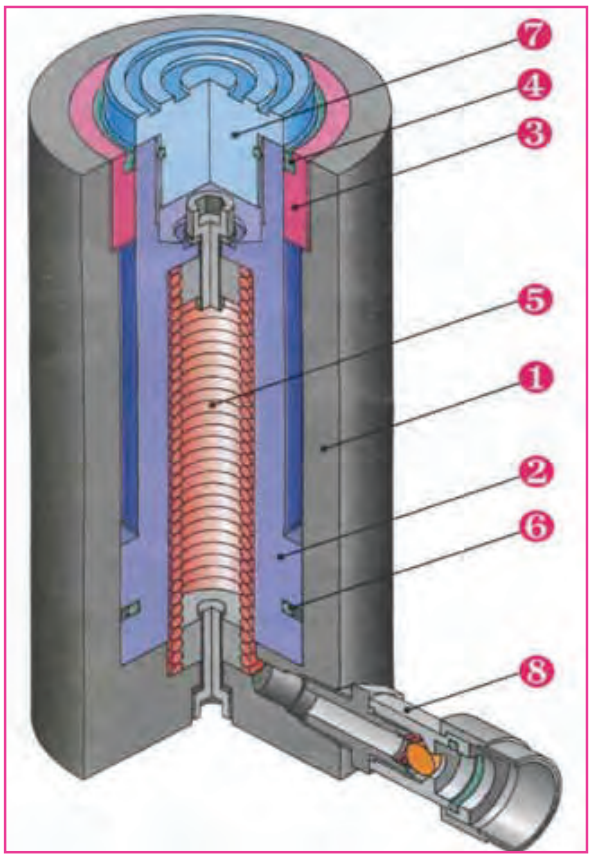

EURO PRESS PACK • Via M. Disma, 87 • 16042 Carasco (GE) ITALY
Tel. 0039 0185 35 271 • Fax 0039 0185 35 11 38

HYDRAULIC CYLINDERS

HOW TO CHOOSE A CYLINDER

Some essential information is necessary to choose the correct cylinder. This information includes:

- **FORCE**
- **STROKE**
- **CLOSED HEIGHT**

And some supplementary data such as:

- **REQUIRED OIL VOLUME**
- **OPERATIONAL SPEED**

In the Useful pages you may find some calculation examples. **p. 126**

There are three main types of cylinders: , **spring return and oil return.**

Load return

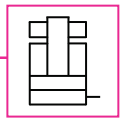

Load return , in which the piston is retracted by the weight of the load (or any other external force). The minimum force required to retract the piston is approximately 0,2% of the rated cylinder nominal push value. These cylinders are the most economic solution for an application that does not require quick removal of the cylinder after the load has been lowered.
The cylinders of the **CGG**, **CGR**, **CGS** ranges belong to this group.

Spring return

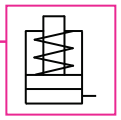

Spring assisted return , in which the piston is retracted by means of an internal compression or tension spring inside the cylinder . These cylinders are proposed whenever it is necessary to remove the cylinder quickly once the load has been lowered.

The cylinders of the **CMC, CMF, CMI, CML, CMP, CMT** ranges belong to this group.

Oil return

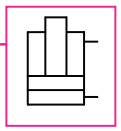

Oil Return, (double acting): the piston is retracted hydraulically by pumping oil into the anular chamber of the cylinder.
These cylinders are ideal for use in production applications where a fast cycle time is required.
When being used in a lifting application, lowering of the load can be controlled by fitting a pilot check valve and one-way flow distributor into the circuit.
The return pressure can be set at a lower value when it is only needed to retract the piston. The cylinders of the **COF, COI, COS** ranges belong to this group.
When it is necessary also to exert a pulling force, we recommend cylinders belonging to the **COD** ranges . These cylinders are supplied complete with the required threads and connections and may also be operated at the maximum working pressure on both sides of the piston.

Example: cylinder

C	#	#	# # #	#	# # #	#
Cylinder	Return type	Series	Pushing force in tons	**N** = Standard **P** = Plunging (with no end of stroke nut)	Stroke in **mm**	**F** = with base mounting holes **T** = with mobile integral saddle

CMF20N100
Cylinder, spring return with **20** t. force, **N** version, **100** mm stroke.

CGG200N250FT
Load return cylinder with safety nut, **200** t. force, **N** version, **250** mm stroke with fixing holes in the base and integral saddle.

EURO PRESS PACK • Via M. Disma, 87 • 16042 Carasco (GE) ITALY
Tel. 0039 0185 35 271 • Fax 0039 0185 35 11 38

Euro Press Pack

Construction of the "Second Bridge over the Panama Canal - Republic of Panama" for which EUROPRESS has supplied the hydraulic components that hold the segments for the construction of the floor system of the bridge (Panama, July 2003)

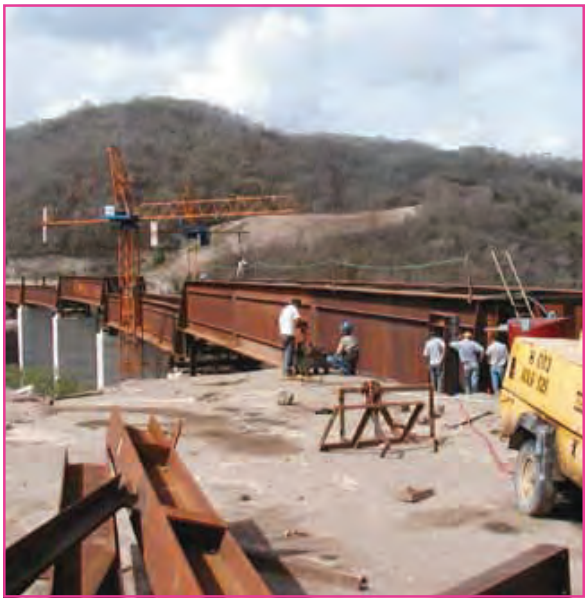

Construction of "Sistema de Transporte de la Región Central de Venezuela, Primera Etapa Caracas Tuy-Medio" through the development of railway viaducts with metallic floor systems lowered with EUROPRESS hydraulic equipment (Caracas, Venezuela June 2003)

EURO PRESS PACK • Via M. Disma, 87 • 16042 Carasco (GE) ITALY
Tel. 0039 0185 35 271 • Fax 0039 0185 35 11 38

CYLINDERS

HYDRAULIC CYLINDERS

Single acting cylinders, load return

CGG ..... p. 12
CGR ..... p. 16
CGS ..... p. 18

Single acting cylinders, spring return

CMC ..... p. 22
CMF ..... p. 24
CMI ..... p. 26
CML ..... p. 28
CMP ..... p. 30
CMT ..... p. 32

Double acting cylinders, oil return

COD ..... p. 34
COF ..... p. 36
COI ..... p. 38
COS ..... p. 40

EURO PRESS PACK • Via M. Disma, 87 • 16042 Carasco (GE) ITALY
Tel. 0039 0185 35 271 • Fax 0039 0185 35 11 38

CGG

Euro Press Pack

HIGH TONNAGE CYLINDERS WITH SAFETY RING NUT, LOAD RETURN

FEATURES

These cylinders are particularly suitable for applications in which the load has to be supported for long periods.
The lock nut can be screwed down onto the cylinder body to hold the load mechanically. This ensures that **operation under load is absolutely safe**.

CGG cylinders have concentric grooves machined into the end of the rod to improve load grip, models above 30 tonne have lifting eyelets for ease of transport.
From 50 tonnes upwards, the cylinders are plunging type and have device which prevents any over-stroke.
The rod has a coloured zone which becomes visible 10 mm before the end of the piston stroke.

All models can operate with off-centred load up to **8%** of their nominal capacity.

OPTIONS

- **T - Version**, cylinder **with integrated tilt saddle**.
- **F - Version** cylinder with base mounting **holes** for fixing purposes.
- **N - Version**, (optional starting from 50 t) cylinders with end of stroke ring nut. This version is in compliance with **ANSI B30.1**.
- **M - Version**, cylinder with spring return. This version is available for N - version cylinders up to 150 tons (i.e., CMG50N100)

OPERATIONAL AREAS

These cylinders are ideal for use in the Construction Industry, e.g. Bridge repair and construction, foundations and underpinning etc.

The anti-corrosion treatment applied to these cylinders during manufacture makes them suitable for use in harsh and aggressive environments.

ACCESSORIES

p. 15

- **Separate ZTT tilt saddle** to help combat possible side loading.

p. 16

Whenever working space is restricted, **CGR** low profile cylinders offer a perfect solution.

For **P version** cylinders without end of stroke nut, it is very important that the operator is in a position to observe when the coloured zone of the piston appears, indicating the end of the piston stroke.

EURO PRESS PACK • Via M. Disma, 87 • 16042 Carasco (GE) ITALY
Tel. 0039 0185 35 271 • Fax 0039 0185 35 11 38

Euro Press Pack

CGG

HIGH TONNAGE CYLINDERS WITH SAFETY RING NUT, LOAD RETURN

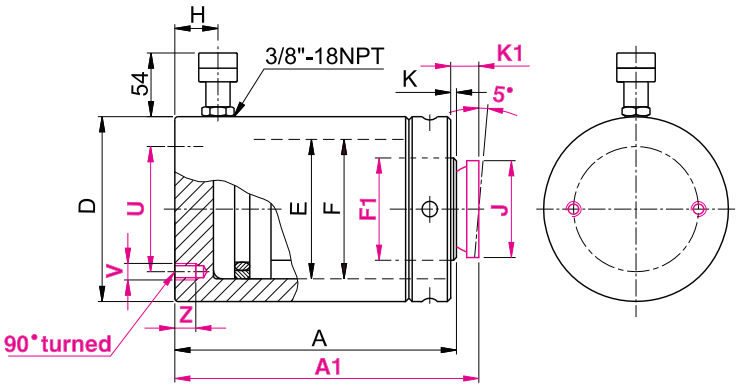

- Force **30 - 500 t**
- Stroke **25 - 300 mm**
- Max working pressure **700 bar**

Cylinders with non standard **force** and **stroke** can be supplied upon request

SELECTION CHART

Pushing force	Stroke	Oil volume	MODEL	Closed height	Closed height with integrated tilt saddle	External Dia.	Piston Dia.	P rod version Dia.	N rod version Dia.	Coupler height	Integrated tilt saddle Dia.	Rod projection	Rod projection with integrated tilt saddle	PCD mounting holes	Mounting holes_Depth	Weight
t* kN	mm	cm³		A mm	A1 mm	D mm	E mm	F mm	F1 mm	H mm	J mm	K mm	K1 mm	U mm	V / Z mm	kg
30 309	100	442	**CGG30N100**	189	193	102	75	-	Tr 65x6	19	53	1	5	65	2xM10 13	11
50 496	100	709	**CGG50P100**	208	213	127	95	Tr 95x6	Tr 85x6	22	68	1	6	95	2xM12 15	19
	150	1063	**CGG50P150**	258	263											23
100 929	100	1327	**CGG100P100**	236	243	175	130	Tr 130x10	Tr 110x10	22	88	2	9	130	2xM12 17	38
	150	1991	**CGG100P150**	286	293											45
150 1407	25	503	**CGG150P25**	184	193	213	160	Tr 160x10	Tr 130x10	30	118	3	12	130	4xM12 17	47
	50	1005	**CGG150P50**	209	218											52
	100	2011	**CGG150P100**	259	268											66
	150	3016	**CGG150P150**	309	318											74
	200	4021	**CGG150P200**	359	368											85
	250	5026	**CGG150P250**	409	418											95
200 1984	25	709	**CGG200P25**	205	214	252	190	Tr 190x10	Tr 165x10	32	148	3	12	140	4xM16 20	75
	50	1418	**CGG200P50**	230	239											84
	100	2835	**CGG200P100**	280	289											100
	150	4253	**CGG200P150**	330	339											116
	200	5670	**CGG200P200**	380	389											133
	250	7088	**CGG200P250**	430	439											1 49
	300	8506	**CGG200P300**	480	489											165

* Nominal value, see kN for the exact force

EURO PRESS PACK • Via M. Disma, 87 • 16042 Carasco (GE) ITALY
Tel. 0039 0185 35 271 • Fax 0039 0185 35 11 38

CGG

Euro Press Pack

HIGH TONNAGE CYLINDERS WITH SAFETY RING NUT, LOAD RETURN

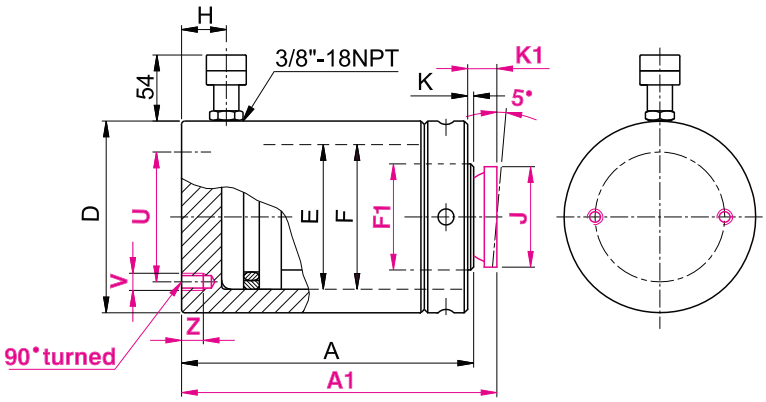

Force	30 - 500 t
Stroke	25 - 300 mm
Max working pressure	700 bar

Cylinders with non standard **force** and **stroke** can be supplied upon request

SELECTION CHART

Pushing force t* kN	Stroke mm	Oil volume cm³	MODEL	Closed height A mm	Closed height with integrated tilt saddle A1 mm	External Dia. D mm	Piston Dia. E mm	P rod version Dia. F mm	N rod version Dia. F1 mm	Coupler height H mm	Integrated tilt saddle Dia. J mm	Rod projection K mm	Rod projection with integrated tilt saddle K1 mm	PCD mounting holes U mm	Mounting holes_Depth V /Z mm	Weight kg
250 2424	25	866	CGG250P25	224	233	280	210	Tr 210x10	Tr 175x10	34	158	3	12	150	4xM16 20	95
	50	1732	CGG250P50	249	258											104
	100	3464	CGG250P100	299	308											127
	150	5195	CGG250P150	349	358											140
	200	6927	CGG250P200	399	408											158
	250	8659	CGG250P250	449	458											176
	300	10391	CGG250P300	499	508											194
300 2908	25	1039	CGG300P25	240	249	305	230	Tr 230x10	Tr 195x10	38	158	3	12	170	4xM16 20	126
	50	2077	CGG300P50	265	274											137
	100	4155	CGG300P100	315	324											160
	150	6232	CGG300P150	365	374											183
	200	8310	CGG300P200	415	424											205
	250	10387	CGG300P250	465	474											228
	300	12464	CGG300P300	515	524											251
350 3436	25	1227	CGG350P25	250	262	332	250	Tr 250x10	Tr 215x10	42	196	3	15	200	4xM16 20	149
	50	2454	CGG350P50	275	287											162
	100	4909	CGG350P100	325	337											188
	150	7363	CGG350P150	375	387											215
	200	9817	CGG350P200	425	437											241
	250	12272	CGG350P250	475	487											267
	300	14726	CGG350P300	525	537											293

* Nominal value, see kN for the exact force

EURO PRESS PACK • Via M. Disma, 87 • 16042 Carasco (GE) ITALY
Tel. 0039 0185 35 271 • Fax 0039 0185 35 11 38

Euro Press Pack

CGG

HIGH TONNAGE CYLINDERS WITH SAFETY RING NUT, LOAD RETURN

SELECTION CHART

Pushing force	Stroke	Oil volume	MODEL	Closed height	Closed height with integrated tilt saddle	External Dia.	Piston Dia.	P rod version Dia.	N rod version Dia.	Coupler height	Integrated tilt saddle Dia.	Rod projection	Rod projection with integrated tilt saddle	PCD mounting holes	Mounting holes_Depth	Weight
t* kN	mm	cm³		A mm	A1 mm	D mm	E mm	F mm	F1 mm	H mm	J mm	K mm	K1 mm	U mm	V /Z mm	kg
400 4008	25	1431	CGG400P25	260	272	356	270	Tr 270x10	Tr 235x10	42	196	3	15	230	4xM16 20	187
	50	2863	CGG400P50	285	297											203
	100	5726	CGG400P100	335	247											234
	150	8588	CGG400P150	385	397											266
	200	11451	CGG400P200	435	447											298
	250	14314	CGG400P250	485	497											330
	300	17177	CGG400P300	535	547											362
500 4948	25	1767	CGG500P25	275	287	396	300	Tr 300x10	Tr 260x10	50	196	3	15	250	4xM16 20	257
	50	3534	CGG500P50	300	312											278
	100	7069	CGG500P100	350	362											319
	150	10603	CGG500P150	400	412											360
	200	14137	CGG500P200	450	462											402
	250	17651	CGG500P250	500	512											443
	300	21206	CGG500P300	550	562											484

* Nominal value, see kN for the exact force

ACCESSORIES: ZTT TILT SADDLES

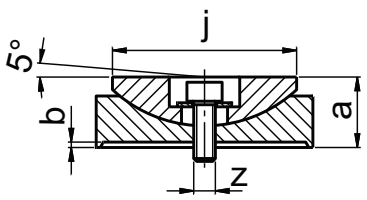

MODEL	For use with	a	b	j	z	kg
ZTT30	CGG30N100	19	1	53	M5	0,3
ZTT50	CGG50 # # # #	25		68	M8	0,9
ZTT100	CGG100 # # # #	34	2	88	M10	1,7
ZTT150	CGG150 # # # #	45	3	118		3,4
ZTT200	CGG200 # # # #	54	3	148		7,0
ZTT250	CGG250 # # # #	58		158		9,5
ZTT300	CGG300 # # # #					11,3
ZTT350	CGG350 # # # #	71		196	M12	18,0
ZTT400	CGG400 # # # #					20,7
ZTT500	CGG500 # # # #					23,8

MODEL CODING

C#G	30	N	###	#
Series **G** (gravity) Series **M** (spring)	Pushing **force** in tonne	**N** = With end of stroke nut **P** = With no end of stroke nut (Plunging)	**Stroke** in mm	**F** = with base mounting holes **T** = with integrated tilt saddle**

** Cylinders with a force below 100 tonne can be supplied subject to a minimum production batch, to be advised

EURO PRESS PACK • Via M. Disma, 87 • 16042 Carasco (GE) ITALY
Tel. 0039 0185 35 271 • Fax 0039 0185 35 11 38

CGR

Euro Press Pack

LOW PROFILE CYLINDERS WITH SAFETY RING NUT, LOAD RETURN

FEATURES

Pancake lock ring cylinders have an overflow port to limit stroke. The rod on these cylinders has a coloured area which appears 10mm before the maximum stroke has been reached. This version does not conform to ANSI B30.1.

These cylinders are particularly suited to applications where the load has to be left in a raised position for long periods. The load can be supported by the safety lock nut, this allows the pressure to be released and the pumps and hoses can be disconnected until it is necessary to lower the load.

All cylinders are supplied with integrated tilt saddle and eyelets for ease of transport.

OPERATIONAL AREAS

CGR cylinders are ideal for use in the construction and maintenance of bridges, viaducts, building sites and industrial maintenance where working space is limited.

The protective nitriding treatment on these cylinders gives excellent resistance to corrosion making them suitable for use in aggressive environments.

STANDARD

- **Integrated tilt saddle**, reducing the effects of possible off-centred loads.

CGR cylinders have been designed for use in applications where space is limited and to stand the full load even without a pressure distribution plate below. It is anyhow recommended that pressure plates are placed both under the base and on top of the saddle to distribute the load if the support resistance is not compatible with the pressure shown in the chart.

Non compliance with this notice could result in damage to the cylinder and/or the load being lifted.

During the lifting operation the operator must always be in a position to observe when the coloured end of stroke section of the rod appears.

EURO PRESS PACK • Via M. Disma, 87 • 16042 Carasco (GE) ITALY
Tel. 0039 0185 35 271 • Fax 0039 0185 35 11 38

Euro Press Pack

CGR

LOW PROFILE CYLINDERS WITH SAFETY RING NUT, LOAD RETURN

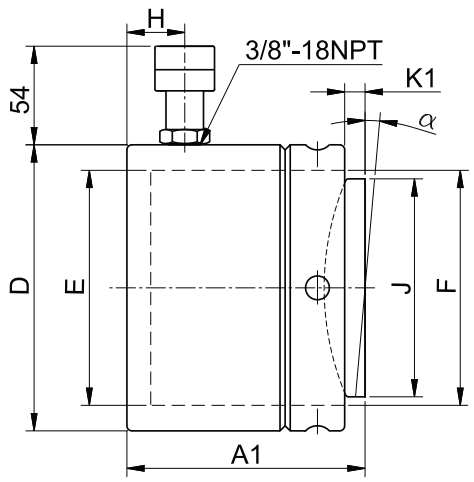

- Force **110 - 900 t**
- Stroke **50 mm**
- Max working pressure **700 bar**

SELECTION CHART

Pushing force t* kN	Stroke mm	Oil volume cm³	Cylinder bottom pressure MPa	Saddle pressure MPa	MODEL	Closed height with integrated tilt saddle A1 mm	External Dia. D mm	Piston Dia. E mm	Rod Dia. F mm	Coupler height H mm	Tilt saddle Dia. J mm	Rod projection with integrated tilt saddle K1 mm	Tilt saddle angle α	Weight kg
110 1078	50	770	46	113	**CGR110N50**	137	178	140	Tr 140x10	19	118	8	5°	26
160 1589		1135	45	102	**CGR160N50**	148	218	170	Tr 170x10	19	148	9	5°	42
200 1985		1418	45	87	**CGR200N50**	154	242	190	Tr 190x10	20	176	10	5°	54
250 2424		1732	45	84	**CGR250N50**	159	268	210	Tr 210x10	22	196	11	5°	68
400 4008		2863	44	89	**CGR400N50**	178	347	270	Tr 270x10	27	248	11	4°	128
500 4948		3534	44	81	**CGR500N50**	192	385	300	Tr 300x10	30	285	10	3°	171
700 6735		4811	44	85	**CGR700N50**	200	445	350	Tr 350x10	30	325	10	3°	238
900 8796		6283	47	83	**CGR900N50**	216	495	400	Tr 400x10	30	375	12	3°	315

* Nominal value, see kN for the exact force

EURO PRESS PACK • Via M. Disma, 87 • 16042 Carasco (GE) ITALY
Tel. 0039 0185 35 271 • Fax 0039 0185 35 11 38

CGS

Euro Press Pack

HIGH TONNAGE CYLINDERS, LOAD RETURN

FEATURES

CGS cylinders also have concentric grooves machined into the end of the rod to improve load grip, models above 30 tonne have lifting eyelets for ease of transport.

From 50 tonnes upwards, the cylinders are plunging type and have device which prevents any over-stroke.
The rod has a coloured zone which becomes visible 10 mm before the end of the piston stroke.

All models can operate with off-centred load up to **8%** of their nominal capacity.

OPTIONS

- **T - Version**, cylinder **with integrated tilt saddle**.
- **F - Version**, cylinder with base mounting **holes** for fixing purposes.
- **N - Version**, (optional starting from 50 t) cylinders with end of stroke ring nut. This version is in compliance with **ANSI B30.1**.

OPERATIONAL AREAS

Extremely solid robust cylinders suitable for use in the civil and marine engineering industry for lifting and lowering heavy loads.

The anti corrosive finish makes them particularly suitable for use in harsh environments such as salt water, chemical industry etc.

ACCESSORIES

p. 21

- **Separate ZTT tilt saddle** to help combat possible side loading.

Follow our safety instructions see useful pages p. 126

Where **P version** cylinders are being used the operator must always be in a position to observe when the coloured end of stroke section of the rod appears.

EURO PRESS PACK • Via M. Disma, 87 • 16042 Carasco (GE) ITALY
Tel. 0039 0185 35 271 • Fax 0039 0185 35 11 38

Euro Press Pack

CGS

HIGH TONNAGE CYLINDERS, LOAD RETURN

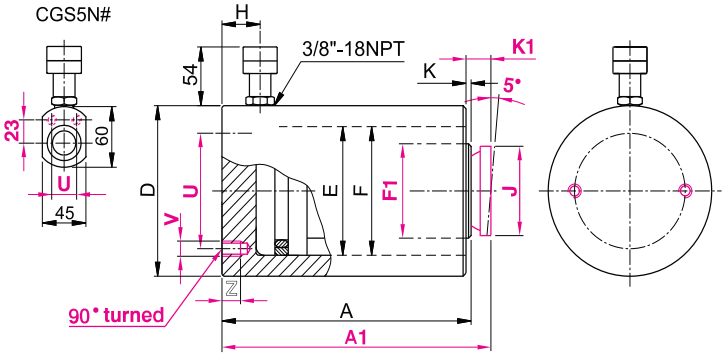

- Force **5 - 500 t**
- Stroke **15 - 300 mm**
- Max working pressure **700 bar**

Cylinders with non standard **force** and **stroke** can be supplied upon request

SELECTION CHART

Pushing force t* kN	Stroke mm	Oil volume cm³	MODEL	Closed height A mm	Closed height with integrated tilt saddle A1 mm	External Dia. D mm	Piston Dia. E mm	P rod version Dia. F mm	N rod version Dia. F1 mm	Coupler height H mm	Integrated tilt saddle Dia. J mm	Rod projection K mm	Rod projection with integrated tilt saddle K1 mm	PCD mounting holes U mm	Mounting holes_Depth V /Z mm	Weight kg
5	15	11	CGS5N15	45	-	60/45	30	-	24	19	-	1	-	30	2xM5 10	1,0
49,5	50	35	CGS5N50	80												1,6
	80	56	CGS5N80	120												2,4
10	25	40	CGS10N25	72	75	75	45	-	35	19	34	1	4	25	2xM8 8	2,8
111	50	80	CGS10N50	97	100											3,6
20	25	71	CGS20N25	75	80	88	60	-	45	19	43	1	6	60	2xM10 10	3,7
198	50	141	CGS20N50	100	105											4,7
	100	283	CGS20N100	150	155											6,6
30	25	110	CGS30N25	86	90	102	75	-	55	19	53	1	5	65	2xM10 13	5,5
309	50	221	CGS30N50	111	115											6,7
	100	442	CGS30N100	161	165											9,1
50	50	354	CGS50P50	122	127	127	95	95	80	22	68	1	6	95	2xM12 15	11,6
496	100	709	CGS50P100	172	177											15,8
	150	1063	CGS50P150	222	227											20,0
100	50	664	CGS100P50	141	148	175	130	130	100	22	88	2	9	130	2xM12 17	24,8
929	100	1327	CGS100P100	191	198											32,0
	150	1991	CGS100P150	241	248											39,3
150	25	503	CGS150P25	137	146	213	160	160	120	30	118	3	12	130	4xM12 17	36,5
1407	50	1005	CGS150P50	162	171											41,8
	100	2011	CGS150P100	212	221											52,4
	150	3016	CGS150P150	262	271											62,9
	200	4021	CGS150P200	312	321											73,4
	250	5026	CGS150P250	362	371											83,9

* Nominal value, see kN for the exact force

EURO PRESS PACK • Via M. Disma, 87 • 16042 Carasco (GE) ITALY
Tel. 0039 0185 35 271 • Fax 0039 0185 35 11 38

CGS

Euro Press Pack

HIGH TONNAGE CYLINDERS, LOAD RETURN

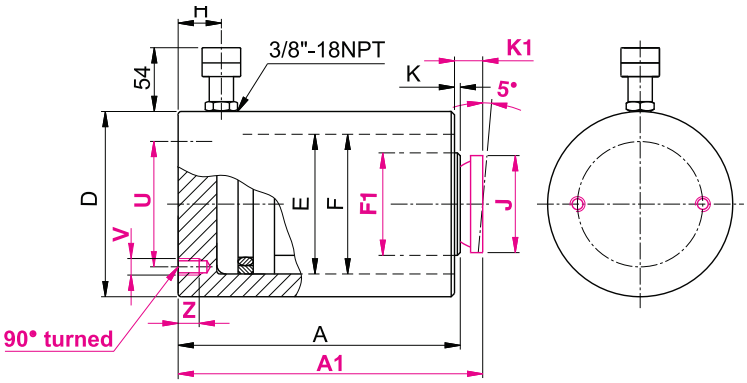

Force	5 - 500 t
Stroke	15 - 300 mm
Max working pressure	700 bar

Cylinders with non standard **force** and **stroke** can be supplied upon request

SELECTION CHART

Pushing force t* kN	Stroke mm	Oil volume cm³	MODEL	Closed height A mm	Closed height with integrated tilt saddle A1 mm	External Dia. D mm	Piston Dia. E mm	P rod version Dia. F mm	N rod version Dia. F1 mm	Coupler height H mm	Integrated tilt saddle Dia. J mm	Rod projection K mm	Rod projection with integrated tilt saddle K1 mm	PCD mounting holes U mm	Mounting holes_Depth V / Z mm	Weight kg
200 1984	25	709	**CGS200P25**	151	160	252	190	190	150	32	148	3	12	140	4xM16 20	57
	50	1418	**CGS200P50**	176	185											65
	100	2835	**CGS200P100**	226	235											81
	150	4253	**CGS200P150**	276	285											95
	200	5670	**CGS200P200**	326	335											111
	250	7088	**CGS200P250**	376	385											126
	300	8506	**CGS200P300**	426	435											141
250 2424	25	866	**CGS250P25**	167	176	280	210	210	170	34	158	3	12	150	4xM16 20	79
	50	1732	**CGS250P50**	192	201											88
	100	3464	**CGS250P100**	242	251											108
	150	5195	**CGS250P150**	292	301											127
	200	6927	**CGS250P200**	342	351											146
	250	8659	**CGS250P250**	392	401											166
	300	10391	**CGS250P300**	442	451											186
300 2908	25	1039	**CGS300P25**	173	182	305	230	230	190	38	158	3	12	170	4xM16 20	96
	50	2077	**CGS300P50**	198	207											108
	100	4155	**CGS300P100**	248	257											132
	150	6232	**CGS300P150**	298	307											155
	200	8310	**CGS300P200**	348	357											178
	250	10387	**CGS300P250**	398	407											202
	300	12464	**CGS300P300**	448	457											225

* Nominal value, see kN for the exact force

EURO PRESS PACK • Via M. Disma, 87 • 16042 Carasco (GE) ITALY
Tel. 0039 0185 35 271 • Fax 0039 0185 35 11 38

Euro Press Pack

CGS

HIGH TONNAGE CYLINDERS, LOAD RETURN

SELECTION CHART

Pushing force t* kN	Stroke mm	Oil volume cm³	MODEL	Closed height A mm	Closed height with integrated tilt saddle A1 mm	External Dia. D mm	Piston Dia. E mm	P rod version Dia. F mm	N rod version Dia. F1 mm	Coupler height H mm	Integrated tilt saddle Dia. J mm	Rod projection K mm	Rod projection with integrated tilt saddle K1 mm	PCD mounting holes U mm	Mounting holes_Depth V / Z mm	Weight kg
350 3436	25	1227	CGS350P25	180	192	332	250	250	210	39	196	3	15	200	4xM16 20	119
	50	2454	CGS350P50	205	217											132
	100	4909	CGS350P100	255	267											162
	150	7363	CGS350P150	305	317											190
	200	9817	CGS350P200	355	367											218
	250	12272	CGS350P250	405	417											247
	300	14726	CGS350P300	455	467											274
400 4008	25	1431	CGS400P25	187	199	356	270	270	230	42	196	3	15	230	4xM16 20	142
	50	2863	CGS400P50	212	224											159
	100	5726	CGS400P100	262	274											192
	150	8588	CGS400P150	312	324											225
	200	11451	CGS400P200	362	374											257
	250	14314	CGS400P250	412	424											290
	300	17177	GS400P300	462	474											323
500 4948	25	1767	GS500P25	195	207	396	300	300	250	50	196	3	15	250	4xM16 20	184
	50	3534	CGS500P50	220	232											204
	100	7069	GS500P100	270	282											243
	150	10603	GS500P150	320	332											284
	200	14137	CGS500P200	370	382											323
	250	17651	GS500P250	420	432											363
	300	21206	CGS500P300	470	482											402

* Nominal value, see kN for the exact force

ACCESSORIES: ZTT TILT SADDLES

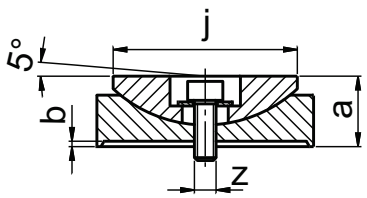

MODEL	For use with	a	b	j	z	kg
ZTT10	CGS10N # # #	16	1	34	M4	0,1
ZTT20	CGS20N # # #	18		43	M5	0,2
ZTT30	CGS30N # # #	19		53		0,3
ZTT50	CGS50 # # # #	25		68	M8	0,9
ZTT100	CGS100 # # # #	34	2	88	M10	1,7
ZTT150	CGS150 # # # #	45	3	118		3,4
ZTT200	CGS200 # # # #	54	3	148		7,0
ZTT250	CGS250 # # # #	58		158		9,5
ZTT300	CGS300 # # # #					11,3
ZTT350	CGS350 # # # #	71		196	M12	18,0
ZTT400	CGS400 # # # #					20,7
ZTT500	CGS500 # # # #					23,8

** Cylinders with non standard force and stroke can be supplied upon request

MODEL CODING

CGS	5	N	###	#
Series	Pushing **force** in tonne	**N** = With end of stroke nut **P** = With no end of stroke nut (Plunging)	**Stroke** in mm	**F** = with base mounting holes **T** = with integrated tilt saddle**

EURO PRESS PACK • Via M. Disma, 87 • 16042 Carasco (GE) ITALY
Tel. 0039 0185 35 271 • Fax 0039 0185 35 11 38

CMC

Euro Press Pack

EXTRA FLAT CYLINDERS, SPRING RETURN

FEATURES

The **CMC** range of cylinders have grooves machined into the rod end to improve load grip, models over 20 tonne also have two threaded holes in the rod end to facilliatate the fitting of a tilt saddle.

All models have two through holes to allow for the cylinder to be bolted down onto a work surface; flat sides also allow them to be used horizontally. Models over 5 tonne are fitted with a wiper seal and from 75 tonne onwards they are fitted with a removeable carry handle.

The **CMC5N6** model is supplied with a **K71F** coupler (**1/4" NPT** connection).

OPERATIONAL AREAS

These extra compact lightweight cylinders are the ideal solution to operate in the narrowest working areas.

They are used to precision level machinery, transformers, bridge sections etc. and in the ship building industry can be used to raise engines into position and remove propellers.

p. 23 **ACCESSORIES**

ZTT tilt saddle, reduces the effects of any possible off-centred load.

STANDARD

Tilt saddle mounting **holes.**

For lifting machinery from very low positions the **UJ** claw lifters can also be used, the claw has three different levels.

p. 104

Due to the small oil capacity of these cylinders the small **PS** hand pumps are recommended to operate these cylinders.

p. 53

EURO PRESS PACK • Via M. Disma, 87 • 16042 Carasco (GE) ITALY
Tel. 0039 0185 35 271 • Fax 0039 0185 35 11 38

Euro Press Pack

CMC

EXTRA FLAT CYLINDERS, SPRING RETURN

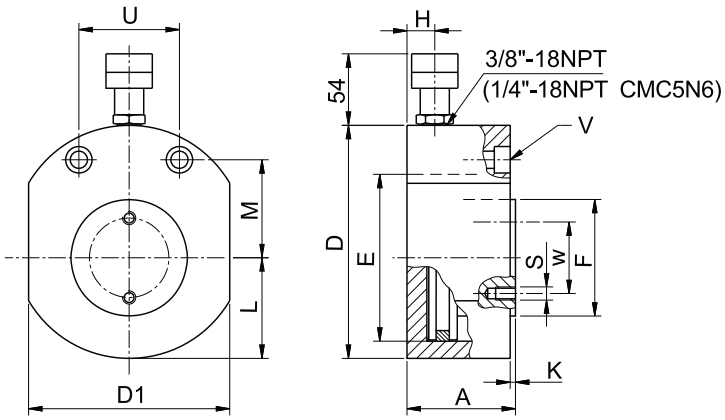

- Force **5 -150 t**
- Stroke **6 - 15 mm**
- Max working pressure **700 bar**

SELECTION CHART

Pushing force t* kN	Stroke mm	Oil volume cm³	MODEL	Closed height A mm	External Dia. D mm	External dimension D1 mm	Piston Dia. E mm	Rod Dia. F mm	Coupler height H mm	Rod projection K mm	Distance from rod axis to the external Dia. L mm	Distance from the mountingholes tothe rod axis M mm	Distance between the mounting holes centres U mm	Through holes for ISO-4762 screws V mm	PCD mounting holes for the tilt saddle W mm	Mounting holes for tilt saddle S mm	Weight kg
5 49,5	6	4	CMC5N6 **	33	59	41	30	24	16	1	20,5	22,5	28,5	M5	-	-	0,6
	15	11	CMC5N15	42					19								0,8
10 111	10	16	CMC10N10	43	78	58	45	35	19	1	29	34	37	M6	-	-	1,6
20 198	10	28	CMC20N10	52	100	76	60	45	19	1	39	40	50	M10	-	-	2,8
30 309	10	44	CMC30N10	59	115	95	75	55	19	1	48	44	52	M10	44	2xM5	4,2
50 496	15	106	CMC50N15	68	143	120	95	80	19	1	60	54	67	M12	65	2xM6	6,9
75 727	15	156	CMC75N15	80	166	142	115	100	19	2	71	67	76	M12	65	2xM6	12,0
100 929	15	199	CMC100N15	86	178	160	130	100	20	2	80	75	76	M12	65	2xM6	14,5
150 1407	15	302	CMC150N15	100	217	194	160	120	23	2	97	83	117	M12	80	2xM6	24,5

* Nominal value, see kN for the exact force ** CMC5N6 with K71F (1/4" NPT) quick coupler

ACCESSORIES: ZTT TILT SADDLES

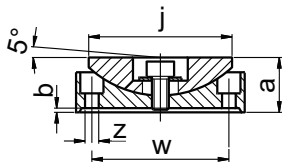

MODEL	For use with	a	b	j	z	w	kg
ZTT30	CMC30N10	19	1	53	5,5	44	0,3
ZTT50	CMC50N15	25	1	68	6,5	65	0,9
ZTT100	CMC75N15 CMC100N15	34	2	88			1,7
ZTT150	CMC150N15	45	3	118		80	3,4

EURO PRESS PACK • Via M. Disma, 87 • 16042 Carasco (GE) ITALY
Tel. 0039 0185 35 271 • Fax 0039 0185 35 11 38

CMF

Euro Press Pack

STEEL AND ALUMINIUM HOLLOW PISTON CYLINDERS, SPRING RETURN

FEATURES

All **CMF** cylinders are supplied as standard with a smooth hollow bore saddle which screws into the bore of the rod. The body has a metric collar thread and there are base mounting holes to allow for the fitting of accessories.

The end of stroke nut has a wiper seal to prevent the penetration of dirt.

Cylinders are supplied with anti-corrosive treatment, which is very effective to protect the central bore.

OPERATIONAL AREAS

These cylinders are recommended for tensioning, pulley and bush extracting, hot and cold pulling etc.

They can also be used in both pull and push operations by inserting either a bar or a cable through the hollow saddle. These cylinders are also supplied with the UE pullers.

p. 25

ACCESSORIES

- **ZTE threaded saddle**, for use with threaded bar and extension screws.

STANDARD

- **Smooth hollow saddle**, prevents any risk of rod deformation.

OPTIONS

- **L Version**, cylinders with aluminium body (CMF###L###).

Our technical department is available to design **special customised solutions**.

EURO PRESS PACK • Via M. Disma, 87 • 16042 Carasco (GE) ITALY
Tel. 0039 0185 35 271 • Fax 0039 0185 35 11 38

Euro Press Pack

CMF

STEEL AND ALUMINIUM HOLLOW PISTON CYLINDERS, SPRING RETURN

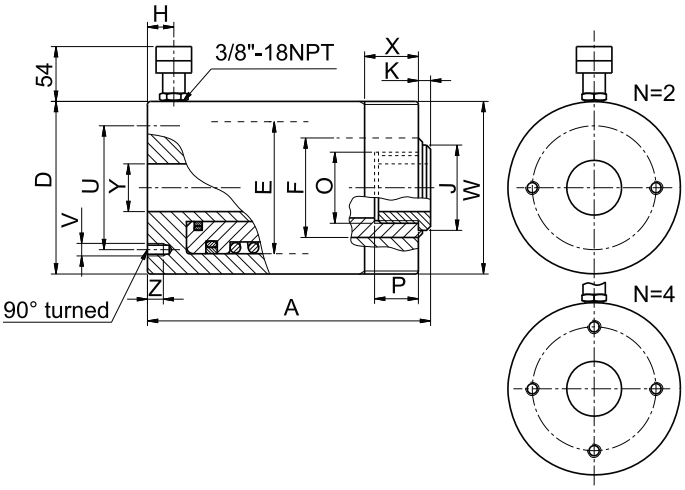

- Force **10 - 100 t**
- Stroke **50 - 160 mm**
- Max working pressure **700 bar**

SELECTION CHART

Pushing force t* kN	Stroke mm	Oil volume cm³	MODEL	Closed height A mm	Ø External Dia./External Dia. L version D mm	Piston Dia. E mm	Rod Dia. F mm	Coupler height H mm	Hollow saddle Dia. J mm	Rod projection K mm	Rod internal thread O mm	Rod thread depth P mm	PCD mounting holes U mm	Base mounting holes_ Holes depth V /Z mm	Collar thread W mm	Collar thread length X mm	Through hole Dia. Y mm	Weight kg	Weight L version kg
10 123	50	88	**CMF10N50**	132	74/75	55	40	19	34,5	1	M30x1,5	16	50,8	2xM8 8	M74x2	20	21	3,8	2,5
	80	141	**CMF10N80**	176														4,8	3,1
20 230	50	164	**CMF20N50**	150	100/105	75	56	19	47,5	2	M40x1,5	24	82,6	2xM8 10	M100x2	20	28	7,8	5,3
	100	328	**CMF20N100**	221														10,7	7,4
	160	525	**CMF20N160**	305														14,1	9,5
30 334	50	239	**CMF30N50**	160	115/125	90	65	21	57,5	2	M48x1,5	32	92,2	2xM10 12	M115x2	20	34	10,5	8,1
	100	477	**CMF30N100**	233														14,5	11
	150	716	**CMF30N150**	303														18,1	13,6
60 590	75	632	**CMF60N75**	219	165/180	125	90	26	81,5	2	M72x1,5	40	130,2	2xM12 16	M165x4	25	54,5	28,9	21,4
	150	1264	**CMF60N150**	331														39,9	28,6
100 947	75	1015	**CMF100N75**	270	215/235	165	125	36	117,5	4	M102x1,5	55	130	4xM12 15	M215x4	35	80,5	59,3	44,6

* Nominal value, see kN for the exact force

ACCESSORIES: ZTE THREADED SADDLES

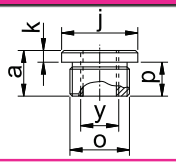

MODEL	For use with	a	k	j	p	y	o	kg
ZTE10	CMF10 # # # #	20	4	34,5	16	3/4" – 16 UNC	M30x1,5	0,1
ZTE20	CMF20 # # # #	30	6	47,5	24	1" – 8 UNC	M40x1,5	0,25
ZTE30	CMF30 # # # #	39	7	57,5	32	$1_{1/4}$" – 7 UNC	M48x1,5	0,32
ZTE60	CMF60 # # # #	47	7	81,5	40	$1_{5/8}$" – $5_{1/2}$ UNS	M72x1,5	0,85

MODEL CODING

CMF	10	N	###
Series	Pushing **force** in tonne	**N** = In steel **L** = in alluminium	**Stroke** in mm

EURO PRESS PACK • Via M. Disma, 87 • 16042 Carasco (GE) ITALY
Tel. 0039 0185 35 271 • Fax 0039 0185 35 11 38

CMI

MULTI-PURPOSE CYLINDERS, SPRING RETURN

FEATURES

All cylinders have collar threads on the cylinder body and mounting holes in the base.

They are supplied with an interchangeable grooved pushing saddle and models above 30 tonne are supplied with a carry handle.

A wiper seal is fitted to models above 5 tonne to prevent the penetration of dirt and to extend cylinder life.

OPERATIONAL AREAS

These cylinders can be operated in any position and are extremely versatile and suitable for different applications, including industrial body shops, steel structural works, presses and special applications.

The nitride treatment gives these cylinders an excellent resistance to corrosion and makes them particularly suitable to operate in the open air or in aggressive environments.

ACCESSORIES

- **ZTT tilt saddle**, reduces the effects of any possible off-centred load.

p. 62

STANDARD

- Base mounting **holes.**
- **Pushing saddle**, prevents any risk of rod deformation.

To operate these cylinders the **MD** power units are particularly suitable.

ACCESSORIES: ZTT TILT SADDLES

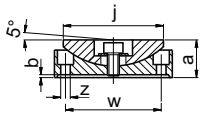

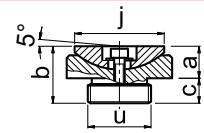

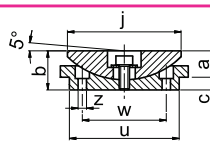

MODEL	For use with	a	b	c	j	u	z	w	kg
ZTT10	CMI10N25	16	1	-	34	-	5,5	24	0,1
ZTT11	CMI10N # # #	9	21	12	34	M24x2	-	-	0,1
ZTT31	CMI25N # # # CMI30N210	16	30	14	53	M32x2			0,3
ZTT51	CMI50N # # #	18	26	8	68	65	5,5	45	0,8
ZTT101	CMI100N # # #	22	32	10	88	85	6,5	65	1,6

EURO PRESS PACK • Via M. Disma, 87 • 16042 Carasco (GE) ITALY
Tel. 0039 0185 35 271 • Fax 0039 0185 35 11 38

Euro Press Pack

CMI

MULTI-PURPOSE CYLINDERS, SPRING RETURN

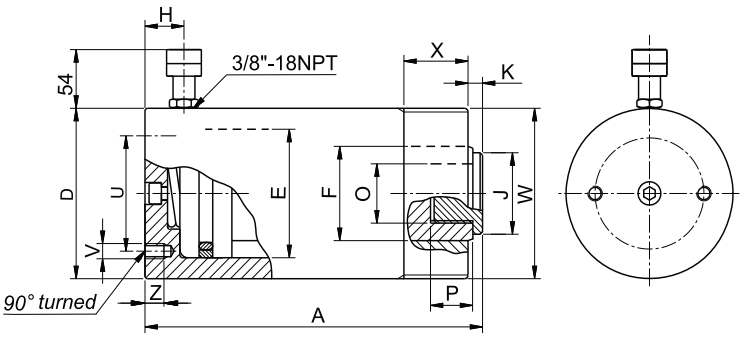

Force	5 - 100 t
Stroke	25 - 350 t
Max working pressure	700 bar

SELECTION CHART

Pushing force t* kN	Stroke mm	Oil volume cm³	MODEL	Closed height A mm	External Dia. D mm	Piston Dia. E mm	Rod Dia. F mm	Coupler height H mm	Hollow saddle Dia. J mm	Rod projection K mm	Rod internal thread O mm	Rod thread depth P mm	PCD mounting holes U mm	Base mounting holes_Holes depth V / Z mm	Collar thread_Thread length W / X mm	Weight kg
5 49,5	25	18	CMI5N25	92	40	30	25	19	24,5	2	M16x1,5	14	25	M6 10	M40x1,5 28	1,1
	50	35	CMI5N50	117												1,3
	75	53	CMI5N75	142												1,5
	125	88	CMI5N125	202												1,9
	175	124	CMI5N175	252												2,3
	225	159	CMI5N225	302												2,7
10 111	25	40	CMI10N25	83	60	45	35	19	33⊗	1⊗	-	-	39	M8 12	M60x1,5 28	2,0
	50	80	CMI10N50	120					34	5	M24x2	15				2,6
	100	159	CMI10N100	170												3,5
	150	238	CMI10N150	245												4,7
	200	318	CMI10N200	295												5,6
	250	398	CMI10N250	345												6,5
	300	477	CMI10N300	408	65			33							M65x2 28	9,03
	350	557	CMI10N350	458												10
25 232	25	83	CMI25N25	119	85	65	55	19	53	9	M32x2	16	58	M10 14	M85x2 40	4,6
	50	166	CMI25N50	144												5,3
	100	332	CMI25N100	214												7,5
	150	498	CMI25N150	264												8,8
	200	664	CMI25N200	314												10,2
	250	830	CMI25N250	364												11,6
	300	996	CMI25N300	414												13,0
	350	1161	CMI25N350	464												15,0
30 309	210	928	CMI30N210	386	102	75	55	47	53	9	M32x2	16	-	-	3 5/16"-12 49	18,4
50 496	50	354	CMI50N50	164	127	95	80	25	65	4	M16	12	95	M12 18	M125x2 40	14,2
	100	709	CMI50N100	214												17,4
	150	1063	CMI50N150	264												20,8
	325	2304	CMI50N325	439												32,6
100 929	100	1327	CMI100N100	246	175	130	100	26	85	4	M16	17	140	M12 18	M168x2 51	39,6
	150	1991	CMI100N150	296												46,0

⊗ Mounting holes for ZTT10 tilt saddle

* Nominal value, see kN for the exact force

EURO PRESS PACK • Via M. Disma, 87 • 16042 Carasco (GE) ITALY
Tel. 0039 0185 35 271 • Fax 0039 0185 35 11 38

CML

ALUMINIUM CYLINDERS, SPRING RETURN

FEATURES

Five models manufactured in a high resistance aluminium alloy complete with a protective treatment, to increase resistance to corrosion. Wiper seals are fitted to prevent the penetration of dirt.

All models are supplied with interchangeable grooved pushing saddle and have two lateral threaded holes to enable the mounting of a tilt saddle to reduce the effects of any side loading.
They are also fitted with a removable carry handle.

OPERATIONAL AREAS

Because of their extremely low weight and dimensions these cylinders are particularly suitable for use in applications where lightness and ease of handling are paramount.

p. 29 **ACCESSORIES**

Separate ZTT tilt saddle, reduces the effects of possible off-centred loads.

STANDARD

Pushing saddle, prevents any risk of rod deformation.

p. 126

Follow our safety instructions.
See useful pages.

CML cylinders and lightweight **PL** pumps make an extremely light and easy to use pump and cylinder set.

p. 49

EURO PRESS PACK • Via M. Disma, 87 • 16042 Carasco (GE) ITALY
Tel. 0039 0185 35 271 • Fax 0039 0185 35 11 38

Euro Press Pack

CML

ALUMINIUM CYLINDERS, SPRING RETURN

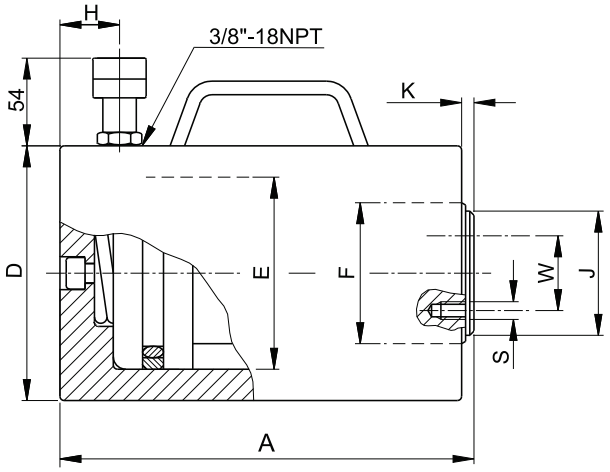

Cylinders with non standard **force** and **stroke** can be supplied upon request.

- Force **50 -100 t**
- Stroke **50 - 150 mm**
- Max working pressure **700 bar**

SELECTION CHART

Pushing force t* kN	Stroke mm	Oil volume cm³	MODEL	Closed height A mm	External Dia. D mm	Piston Dia. E mm	Rod Dia. F mm	Coupler height H mm	Saddle Dia. J mm	Rod projection K mm	PCD mounting holes for the tilt saddle W mm	Mounting holes for tilt saddle S mm	Weight kg
50 496	50	354	CML50N50	158	130	95	80	25	65	4	45	2xM5	7,0
	100	709	CML50N100	208									8,6
	150	1063	CML50N150	258									10,3
100 929	100	1327	CML100N100	246	178	130	100	25	85	4	65	2xM6	18,8
	150	1991	CML100N150	296									21,4

* Nominal value, see kN for the exact force

ACCESSORIES: ZTT TILT SADDLES

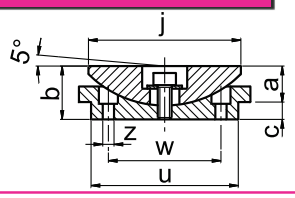

MODEL	For use with	a	b	c	j	u	z	w	kg
ZTT51	CML50N # # #	18	26	8	68	65	5,5	45	0,8
ZTT101	CML100N # # #	22	32	10	88	85	6,5	65	1,6

EURO PRESS PACK • Via M. Disma, 87 • 16042 Carasco (GE) ITALY
Tel. 0039 0185 35 271 • Fax 0039 0185 35 11 38

CMP

LOW PROFILE CYLINDERS, SPRING RETURN

FEATURES

Low closed height compared to stroke. **CMP** cylinders have the longest stroke in the spring return pad jack range.

All cylinders have a grooved rod top for improved load grip and there are two threaded holes for mounting a tilt saddle. This is recommended where there is a danger of sideloading. Wiper seals are fitted to prevent the penetration of dirt.
Base mounting holes are also available as an optional extra.

OPERATIONAL AREAS

The small dimensions and the complete treatment against corrosion makes these cylinders ideal for all lifting, levelling, support and pressing operations in restricted working areas and/or tough environments.

General maintenance work, industrial assembly and construction are among the most common applications for this type of cylinder.

p. 31

ACCESSORIES

- **Separate ZTT tilt saddle**, reduces the effects of possible off-centred loads.

STANDARD

- Tilt saddle mounting **holes**.

OPTIONS

- **F - Version**, cylinder with base mounting **holes** for fixing purposes.

Follow our safety instructions.
See useful pages.

p. 126

EURO PRESS PACK • Via M. Disma, 87 • 16042 Carasco (GE) ITALY
Tel. 0039 0185 35 271 • Fax 0039 0185 35 11 38

Euro Press Pack

CMP

LOW PROFILE CYLINDERS, SPRING RETURN

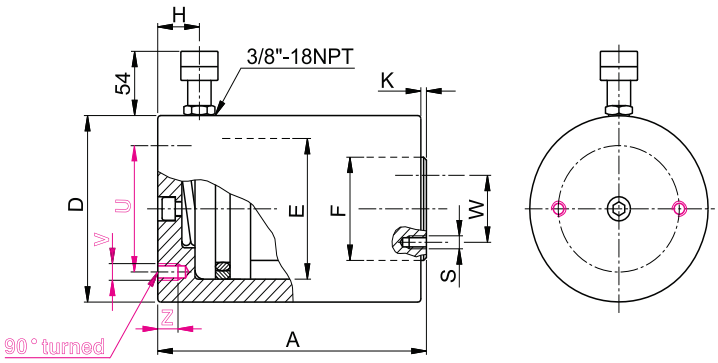

- Force 10 -100 t
- Stroke 25 - 50 mm
- Max working pressure 700 bar

Cylinders with non standard **force** and **stroke** can be supplied upon request

SELECTION CHART

Pushing force	Stroke	Oil volume	MODEL	Closed height	External Dia.	Piston Dia.	Rod Dia.	Coupler height	Rod projection	PCD mounting holes	Mounting holes_Depth	PCD mounting holes for the tilt saddle	Mounting holes for tilt saddle	Weight
t* kN	mm	cm³		A mm	D mm	E mm	F mm	H mm	K mm	U mm	V /Z mm	W mm	S mm	kg
10	25	40	CMP10N25	72	75	45	35	19	1	25	2xM8	24	2xM5	2,5
111	50	80	CMP10N50	97							6			3,2
20	25	71	CMP20N25	75	88	60	45	19	1	60	2xM10	34	2xM5	3,4
198	50	141	CMP20N50	100							10			4,2
30	25	110	CMP30N25	86	102	75	55	19	1	65	2xM10	44	2xM5	5,0
309	50	221	CMP30N50	111							13			6,1
50	25	177	CMP50N25	97	127	95	80	22	1	95	2xM12	65	2xM6	7,6
496	50	354	CMP50N50	122							15			9,1
100	25	332	CMP100N25	116	175	130	100	22	2	140	2xM12	65	2xM6	17,6
929	50	664	CMP100N50	141							17			20,5

* Nominal value, see kN for the exact force

ACCESSORIES: ZTT TILT SADDLES

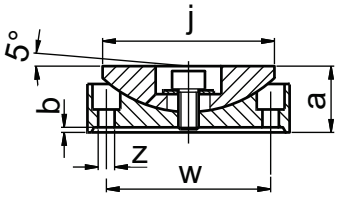

MODEL	For use with	a	b	j	z	w	kg
ZTT10	CMP10N # #	16	1	34	5,5	24	0,1
ZTT20	CMP20N # #	18		43		34	0,2
ZTT30	CMP30N # #	19		53	6,5	44	0,3
ZTT50	CMP50N # #	25		68		65	0,9
ZTT100	CMP100N # #	34	2	88			1,7

MODEL CODING

CMP	10	N	# #	#
Series	Pushing **force** in tonne	**N** = standard	**Stroke** in mm	**F** = with base mounting holes

EURO PRESS PACK • Via M. Disma, 87 • 16042 Carasco (GE) ITALY
Tel. 0039 0185 35 271 • Fax 0039 0185 35 11 38

CMT

Euro Press Pack

PULLING CYLINDERS, IN STEEL AND ALUMINIUM
SPRING RETURN

FEATURES

Range in steel
Have a thread on the body, on the rod and in the base to mount the proper accessories.
The internal and external nitriding treatment gives them a good resistance to wear and corrosion.

Range in aluminium
Manufactured completely in aluminium (apart from the rod) these cylinders have been given an anodizing treatment to protect them against corrosion.
They have a bellow to protect the rod and from 30 tonne models carrying handles.

OPERATIONAL AREAS

Range in steel
Used in assembling, building and in laboratories to test the resistance of materials.

Range in aluminium
These are used in shipbuilding and in steel structural works to pull together plates, or prefabricated parts which have to be welded together.

ACCESSORIES

ZAS Set of eyelets for series N cylinders.

These cylinders can be used with the **PL** lightweight hand pumps with which they make a handy hydraulic set.

p. 49

ACCESSORIES: ZAS EYELETS SET

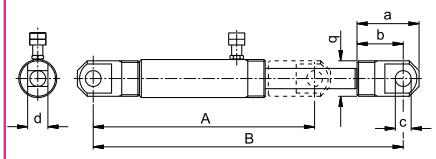

For use with	MODEL	Closed height A	Extended height B	a mm	b mm	c mm	d mm	q mm
CMT2N127	ZAS2	290	417	62	46	16	16	M35x1,5
CMT5N140	ZAS5	403	543	98	73	25	32	M56x2
CMT10N150	ZAS10	394	544					

EURO PRESS PACK • Via M. Disma, 87 • 16042 Carasco (GE) ITALY
Tel. 0039 0185 35 271 • Fax 0039 0185 35 11 38

Euro Press Pack

CMT

PULLING CYLINDERS, IN STEEL AND ALUMINIUM SPRING RETURN

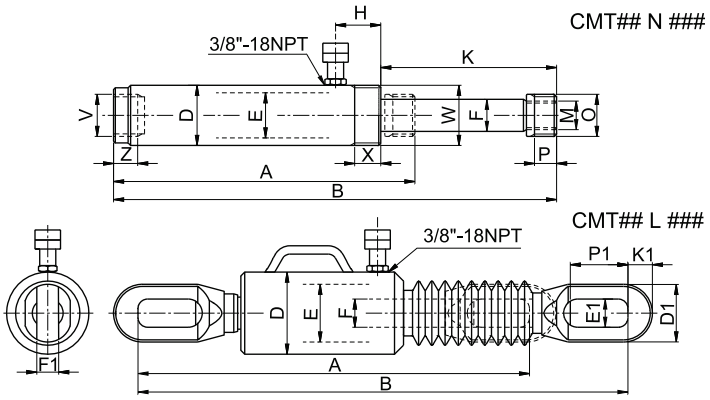

Cylinders with non standard **force** and **stroke** can be supplied upon request

- Force **2 -60 t**
- Stroke **127 - 150 mm**
- Max working pressure **700 bar**

STEEL CYLINDERS SELECTION CHART

Pushing force	Stroke	Oil volume	MODEL	Closed height	Extended height	External Dia.	Piston Dia.	Rod Dia.	Coupler distance	Rod projection	Rod thread	Saddle thread	Saddle thread lenght	Internal base thread	Internal base thread lenght	Bodythread_Thread lenght	Weight
t* kN	mm	cm^3		**A** mm	**B** mm	**D** mm	**E** mm	**F** mm	**H** mm	**K** mm	**M** mm	**O**	**P** mm	**V** mm	**Z** mm	**W /X** mm	**kg**
2 22,9	127	41	**CMT2N127**	244	371	48	30	22	39	155	M18x1,5	3/4" NPT	18	3/4" NP	20	M40x1,5 20	2,9
5 55	140	110	**CMT5N140**	301	441	60	45	32	45	175	M30x2	1 1/4" NPT	22	1 1/4" NPT	24	M60x1,5 26	4,9
10 110	150	236	**CMT10N150**	302	452	80	55	32	39	189	M30x2	-	30	M30x2	25	M80x2 20	8,0

ALUMINIUM CYLINDERS SELECTION CHART

Pushingforce	Stroke	Oil volume	MODEL	Closed height	Extended height	External Dia.	Piston Dia.	Rod Dia.	Eyelet width	Slit width	Eyelet thickness	Eyelet top thickness	Slit length	Weight
t* kN	mm	cm^3		**A** mm	**B** mm	**D** mm	**E** mm	**F** mm	**D1** mm	**E1** mm	**F1** mm	**K1** mm	**P1** mm	**kg**
10 110	150	236	**CMT10L150**	526	676	75	55	32	55	32	20	20	100	4,4
30 334		716	**CMT30L150**	612	762	128	90	45	90	44	34	38	100	13,2
60 559		1199	**CMT60L150**	734	884	168	120	65	107	61	40	50	140	33,5

* Nominal value, see kN for the exact force

MODEL CODING

CMT	10	N	# # #
Series	Pulling **force** in tonne	**N** = In steel **L** = In aluminium	**Stroke** in mm

EURO PRESS PACK • Via M. Disma, 87 • 16042 Carasco (GE) ITALY
Tel. 0039 0185 35 271 • Fax 0039 0185 35 11 38

COD

INDUSTRIAL CYLINDERS, DOUBLE ACTING

FEATURES

All **COD** cylinders have a thread on the body, in the rod and in the base which makes them very versatile.
A complete range of accessories are available for use with various applications.

The guide and end of stroke nut has a wiper to prevent the ingress of dirt and to improve the working life of the cylinder.

OPERATIONAL AREAS

These cylinders are used in industrial applications where a large number of cycles are required.
Used in blocking operations, in laboratories for tests needing push and pull forces.

The nitride anti-corrosive treatment makes them suitable for use in harsh environments and in the open air.

p. 35 **ACCESSORIES**

- **ZAE Clevis eyes** To be mounted on the rod or in the base.
- **ZAF Flange** To be mounted on the machined ends of the body.
- **ZAP Plate** To be mounted on the machined ends of the body as alternative to the flange.
- **ZAA Nut** To block either flange or plate.

p. 83

Due to their unusual mounting, these cylinders are supplied without the female **K73F** half-couplers which can be ordered separately if required.

EURO PRESS PACK • Via M. Disma, 87 • 16042 Carasco (GE) ITALY
Tel. 0039 0185 35 271 • Fax 0039 0185 35 11 38

Euro Press Pack

COD

INDUSTRIAL CYLINDERS, DOUBLE ACTING

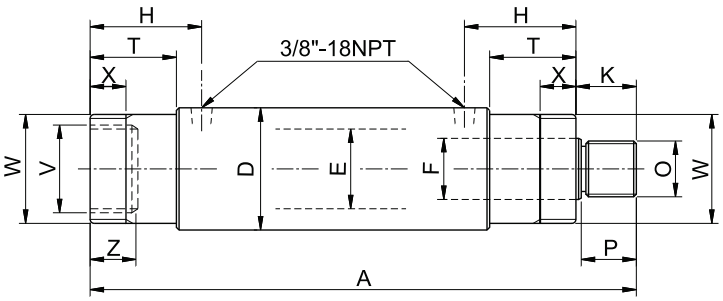

- Force **5 - 25 t**
- Stroke **30 - 260 mm**
- Max working pressure **700 bar**

SELECTION CHART

Pushing force t* kN	Pullingforce t* kN	Stroke mm	Pushing oil volume cm³	Pulling oil volume cm³	MODEL	Closed height A mm	External Dia. D mm	Piston Dia. E mm	Rod Dia. F mm	Couplers height H mm	Rod prjection K mm	Rod thread O mm	Rod thread length P mm	Collar length T mm	Internal base thread V mm	Internal base thread depth Z mm	Collar thread W mm	Collar thread length X mm	Weight kg
5	3	30	21	12	COD5N30	185	50	30	20	45	22	M18x1,5	19	26	M35x1,5	13	M42x1,5	9	2,1
49,5	27,5	80	57	31	COD5N80	235													2,8
		160	113	63	COD5N160	315													3,8
10	6	30	42	27	COD10N30	204	63	42	25	54	23	M22x1,5	20	35	M42x1,5	15	M56x2	15	3,6
97	62	80	111	72	COD10N80	254													4,5
		160	222	143	COD10N160	334													5,8
		260	360	233	COD10N260	434													7,3
15	8	160	314	185	COD15N160	376	80	50	32	71	31	M30x2	28	52	M56x2	27	M70x2	16	10,8
137	81	260	511	301	COD15N260	476													13,9
25	12	160	531	276	COD25N160	412	92	65	45	84	41	M42x1,5	38	65	M70x2	30	M85x2	20	15,5
232	121	260	863	449	COD25N260	512													19,4

* Nominal value, see kN for the exact force

ACCESSORIES FOR COD CYLINDERS: ZAE - ZAF- ZAP - ZAA

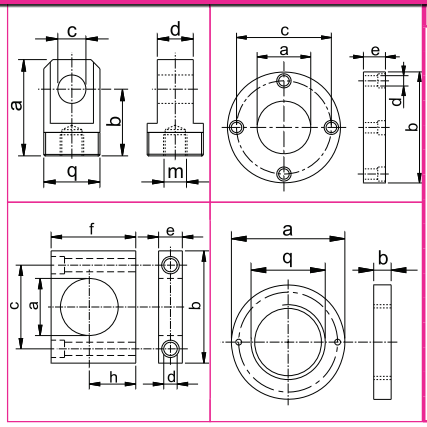

MODEL	a	b	c	d	e	f	h	m	q	kg
ZAE5	62	46	16	16	-	-	-	M18x1,5	M35x1,5	0,3
ZAE10	77	58	20	25	-	-	-	M22x1,5	M42x1,5	0,6
ZAE15	98	73	25	32	-	-	-	M30x2	M56x2	1,2
ZAE25	112	80	32	38	-	-	-	M42x1,5	M70x2	2,0
ZAF5	42	98	78,6	11	17	-	-	-	-	0,8
ZAF10	56	118	99	11	23	-	-	-	-	1,5
ZAF15	70	145	116	17	35	-	-	-	-	3,4
ZAF25	85	168	136	17	45	-	-	-	-	6,0
ZAP5	42	80	58	10,5	17	60	32	-	-	0,4
ZAP10	56	110	82,6	13	23	82	45	-	-	1,1
ZAP15	70	135	100	21	35	100	52	-	-	2,6
ZAP25	85	160	118	26	45	125	63,5	-	-	5,1
ZAA5	58	9	-	-	-	-	-	-	M42x1,5	0,1
ZAA10	78	12	-	-	-	-	-	-	M56x2	0,3
ZAA15	95	16	-	-	-	-	-	-	M70x2	0,6
ZAA25	108	20	-	-	-	-	-	-	M85x2	0,8

EURO PRESS PACK • Via M. Disma, 87 • 16042 Carasco (GE) ITALY
Tel. 0039 0185 35 271 • Fax 0039 0185 35 11 38

COF

CYLINDERS WITH HOLLOW PISTON, OIL RETURN

FEATURES

All **COF** cylinders are supplied with a smooth hollow saddle and have a centre hole, thread on the body, in the rod and in the base to mount them easily and enable them to be used with accessories.

A safety valve connected to the retract chamber prevents any overpressure.

The end of stroke nut has a wiper to prevent the ingress of dirt.

The anti-corrosive nitride treatment makes these cylinders suitable for use in harsh environments and in the open air

p. 37

ACCESSORIES

- **ZTE threaded saddle**, enables the mounting of threaded bars.

STANDARD

- **Smooth hollow saddle**, avoids any risk of rod deformation.

OPERATIONAL AREAS

The through hole makes them particularly suitable for tensioning, mounting and extracting of pulleys, bushings and heat exchanger pipes.

They can be used in push and pull operations by putting a bar or a cable attached to the saddle.

Cylinders in **aluminium** or with non standard **strokes** or centre **holes** can be supplied on request.

p. 49

The **PL262**, PL264 e PL268 hand pumps which have a 4 way valve can be used to operate oil return cylinders.

Follow our safety instructions.
See useful pages.

p. 126

EURO PRESS PACK • Via M. Disma, 87 • 16042 Carasco (GE) ITALY
Tel. 0039 0185 35 271 • Fax 0039 0185 35 11 38

Euro Press Pack

COF

CYLINDERS WITH HOLLOW PISTON, OIL RETURN

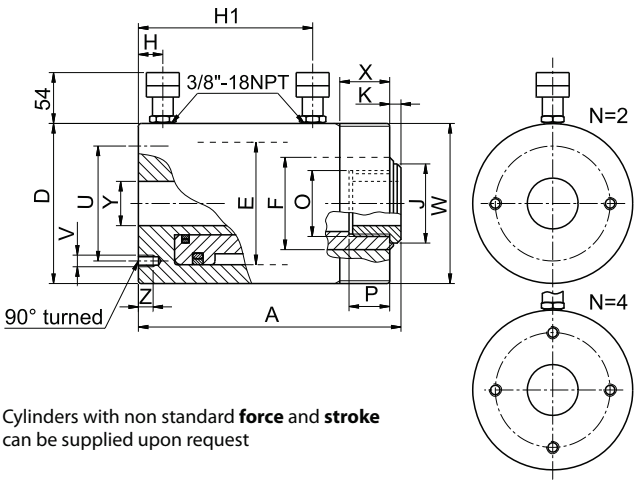

Cylinders with non standard **force** and **stroke** can be supplied upon request

- Force **30 - 200 t**
- Stroke **75 - 250 mm**
- Max working pressure **700 bar**

SELECTION CHART

Pushing force t* kN	Pulling force t* kN	Stroke mm	Pushing oil volume cm³	Pulling oil volume cm³	MODEL	Closed height A mm	External Dia. D mm	Piston Dia. E mm	Rod Dia. F mm	Couplers height H mm	Couplers height H1 mm	Hollow saddle Dia. J mm	Rod projection K mm	Rod internal thread O mm	Rod thread depth P mm	PCD mounting holes U mm	Base mounting holes_ Holes depth V / Z mm	Collar thread W mm	Collar thread lenght X mm	Trough hole Dia. Y mm	Weight kg
30 334	**18** 176	100	477	251	**COF30N100**	196	115	90	70	21	152	57,5	2	M48x1,5	32	65	2xM10 12	M115x2	20	34	13
		150	716	377	**COF30N150**	246					202										16
		250	1193	628	**COF30N250**	346					302										21
60 590	**31** 309	75	632	331	**COF60N75**	186	165	125	100	26	134	81,5	2	M72x1,5	40	90	4xM10 16	M165x4	25	54,5	26
		100	842	442	**COF60N100**	211					159										28
		150	1264	663	**COF60N150**	261					209										34
		250	2106	1104	**COF60N250**	361					309										46
100 947	**58** 568	75	1015	608	**COF100N75**	214	215	165	130	36	155	117,5	4	M102x1,5	55	130	4xM12 15	M215x4	35	80,5	47
		150	2029	1216	**COF100N150**	289					230										61
		250	3382	2027	**COF100N250**	389					330										79
150 1435	**76** 748	200	4100	2136	**COF150N200**	349	247	190	150	36	284	127,5	4	M112x2	60	-	-	-	-	80,5	100
200 1979	**94** 924	200	5655	2639	**COF200N200**	380	305	230	190	37	305	167,5	5	M135x2	70	-	-	-	-	103	160

* Nominal value, see kN for the exact force

ACCESSORIES: ZTE THREADED SADDLES

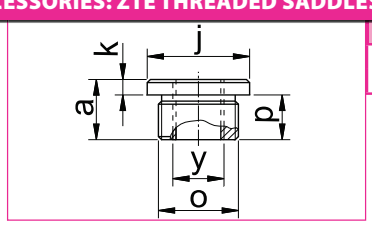

MODEL	For use with	a	k	j	p	y	o	kg
ZTE30	COF30N # # #	39	7	57,5	32	$1_{1/4}$" – 7 UNC	M48x1,5	0,32
ZTE60	COF60N # # #	47	7	81,5	40	$1_{5/8}$" – $5_{1/2}$ UNS	M72x1,5	0,85

EURO PRESS PACK • Via M. Disma, 87 • 16042 Carasco (GE) ITALY
Tel. 0039 0185 35 271 • Fax 0039 0185 35 11 38

COI

Euro Press Pack

MULTIPURPOSE CYLINDERS, OIL RETURN

FEATURES

These cylinders have: collar thread, internal rod thread and base mounting holes.

They are supplied with interchangeable grooved saddle and models over 30 tonne have eyelets for transport.

A safety valve connected to the retract chamber avoids any overpressure.

The guide nut has a wiper ring to prevent the ingress of dirt and to extend the working life of the cylinder.

p. 39

ACCESSORIES

Separate ZTT tilt saddle, reduces the effects of possible off-centred loads.

STANDARD

Base mounting **holes.**

Pushing saddle, prevents any risk of rod deformation.

p. 126

Follow our safety instructions.
See useful pages.

OPERATIONAL AREAS

Highly versatile and heavy duty cylinders designed to be used in industrial applications with a high number of working cycles.

They are also used in pushing of underpass construction, in piling operations and because of their collar thread they can be used in presses.

p. 40

In case of occasional operation the cylinders of the COS range could be a more economical solution.

p. 67

The modular power packs with **4 way valves** are particularly suitable to operate these cylinders.

EURO PRESS PACK • Via M. Disma, 87 • 16042 Carasco (GE) ITALY
Tel. 0039 0185 35 271 • Fax 0039 0185 35 11 38

Euro Press Pack

COI

MULTIPURPOSE CYLINDERS, OIL RETURN

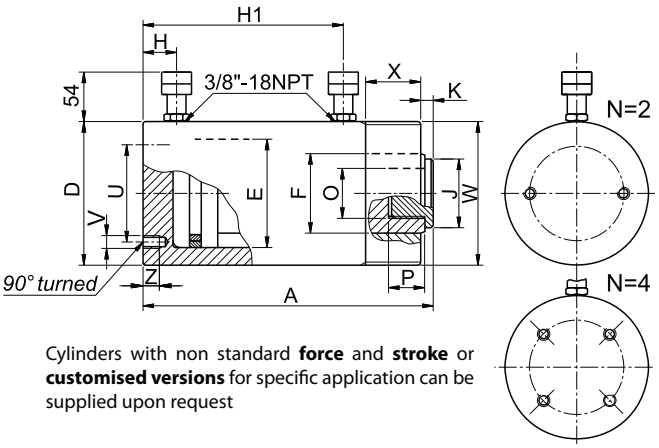

Cylinders with non standard **force** and **stroke** or **customised versions** for specific application can be supplied upon request

- Force **10 - 500 t**
- Stroke **150 - 325 mm**
- Max working pressure **700 bar**

SELECTION CHART

Pushing force t* kN	Pulling force t* kN	Stroke mm	Pushing oil volume cm³	Pulling oil volume cm³	MODEL	Closed height A mm	External Dia. D mm	Piston Dia. E mm	Rod Dia. F mm	Coupler height H mm	Coupler height H1 mm	Saddle Dia. J mm	Rod projection K mm	Rod internal thread O mm	Rod thread depth P mm	PCD mounting holes U mm	Mounting holes_Depth V/Z mm	Collar thread_Tread length W / X mm	Weight kg
10	**5**	150	239	118	**COI10N150**	258	60	45	32	19	213	34	6	M24x2	15	39	2xM8	M60x1,5	5,2
111	55	250	398	197	**COI10N250**	358					313						12	20	6,8
30	**10**	150	663	239	**COI30N150**	279	100	75	60	23	221	53	9	M32x2	16	50	2xM10	M100x2	15,5
309	111	250	1104	398	**COI30N250**	379					331						15	30	20,5
50	**15**	150	1063	309	**COI50N150**	288	127	95	80	25	234	65	4	M16	17	75	2xM12	M125x2	26,5
496	144	325	2304	670	**COI50N325**	463					409						18	31	41,0
100	**38**	150	1991	813	**COI100N150**	323	175	130	100	33	250	85	4	M16	17	100	4xM12	M168x2	55
929	379	300	3982	1626	**COI100N300**	473					400						23	50	77
150	**62**	150	3016	1319	**COI150N150**	336	215	160	120	40	255	105	6	M16	17	130	4xM16	M215x4	85
1407	616	300	6032	2639	**COI150N300**	486					405						23	56	118
200	**76**	150	4253	1602	**COI200N150**	355	255	190	150	48	268	135	7	M16	17	140	4xM16	M255x4	129
1984	748	300	8506	3204	**COI200N300**	505					418						23	60	177
300	**94**	150	6232	1979	**COI300N150**	391	305	230	190	60	290	175	7	M16	17	200	4xM16	M305x4	208
2908	923	300	12464	3958	**COI300N300**	541					440						30	74	278
400	**112**	150	8588	2356	**COI400N150**	421	355	270	230	70	310	215	7	M16	17	250	4xM20	M355x4	307
4008	1099	250	14314	3927	**COI400N250**	521					410						33	84	373
500	**154**	150	10603	3240	**COI500N150**	462	395	300	250	80	330	235	12	M16	17	280	4xM20	M395x4	416
4948	1512	250	17671	5400	**COI500N250**	562					430						40	100	495

* Nominal value, see kN for the exact force

ACCESSORIES: ZTT TILT SADDLES

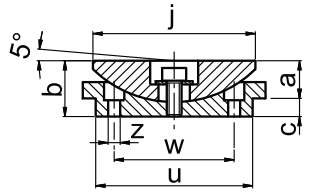

MODEL	For use with	a	b	c	j	u	z	w	kg
ZTT11	COI10N # # #	9	21	12	34	M24x2	-	-	0,1
ZTT31	COI30N # # #	16	30	14	53	M32x2			0,3
ZTT51	COI50N # # #	18	26	8	68	65	5,5	45	0,8
ZTT101	COI100N # # #	22	32	10	88	85	6,5	65	1,6
ZTT151	COI150N # # #	32	42		118	105		80	3,2
ZTT201	COI200N # # #	39	51	12	148	135	8,5	110	6,5
ZTT301	COI300N # # #	43	55		158	175		150	11,0
ZTT401	COI400N # # #	56	68		196	215		190	20,2
ZTT501	COI500N # # #	56	68			235		210	23,2

EURO PRESS PACK • Via M. Disma, 87 • 16042 Carasco (GE) ITALY
Tel. 0039 0185 35 271 • Fax 0039 0185 35 11 38

COS

HIGH TONNAGE CYLINDERS, OIL RETURN

FEATURES

Solidly designed, the rod end has concentric grooves to improve load grip. Models above 30 tonne have lifting eyes, all models have anti-corrosive nitride treatment making them suitable for use in harsh environments.

A safety valve connected to the return chamber prevents any overpressure.

The end of stroke nut has a wiper to prevent the ingress of dirt.

They can operate with off-centred loads up to **8%** of their nominal capacity.

p. 43

ACCESSORIES

- **Separate ZTT tilt saddle** , to help combat possible side loading.

OPTIONS

- **T - Version**, cylinder **with integrated tilt saddle**.

  F - Version, cylinder with base mounting **holes** for fixing purposes.

OPERATIONAL AREAS

Extremely solid hydraulic cylinders highly recommended for lifting, holding and lowering operations.

Ideally suited for use in civil and marine engineering applications and also in the construction industry.

p. 38

Where repetitive working cycles are needed or for use in presses, we recommend cylinders from the **COI** range.

p. 93

To ensure positive load holding we recommend installing the **VRP38** pilot check valve between the pump and cylinder.

EURO PRESS PACK • Via M. Disma, 87 • 16042 Carasco (GE) ITALY
Tel. 0039 0185 35 271 • Fax 0039 0185 35 11 38

Euro Press Pack

COS

HIGH TONNAGE CYLINDERS, OIL RETURN

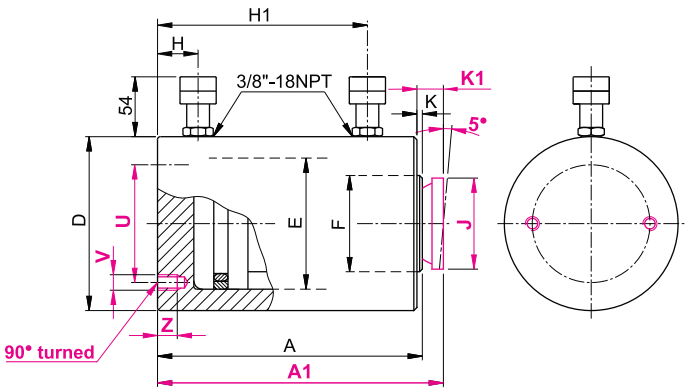

- Force **50 - 500 t**
- Stroke **25 - 300 mm**
- Max working pressure **700 bar**

Cylinders with non standard **force** and **stroke** can be supplied upon request

SELECTION CHART

Pushing force t* kN	Pulling force t* kN	Stroke mm	Pushing oil volume cm³	Pulling oil volume cm³	MODEL	Closed height A mm	Closed height with integrated tilt saddle A1 mm	External Dia. D mm	Piston Dia. E mm	Rod Dia. F mm	Coupler height H mm	Coupler height H1 mm	Integrated tilt saddle Dia. J mm	Rod projection with integrated tilt saddle K mm	Rod projection with integrated tilt saddle K1 mm	PCD mounting holes U mm	Mounting holes_Depth V/Z mm	Weight kg
50 496	15 144	50	354	103	COS50N50	149	154	127	95	80	20	104	68	1	6	95	2xM12 15	14
		100	709	206	COS50N100	199	204					154						18
		150	1063	309	COS50N150	249	254					204						22
100 929	38 379	50	664	271	COS100N50	171	178	175	130	100	28	124	88	2	9	130	2xM12 17	30
		100	1327	542	COS100N100	221	228					174						38
		150	1991	813	COS100N150	271	278					224						45
		200	2655	1084	COS100N200	321	328					274						52
150 1407	62 616	25	503	220	COS150N25	167	176	213	160	120	30	106	118	3	12	130	4xM12 17	45
		50	1005	440	COS150N50	192	201					131						50
		100	2011	880	COS150N100	242	251					181						61
		150	3016	1319	COS150N150	292	301					231						71
		200	4021	1759	COS150N200	342	351					281						82
		250	5027	2199	COS150N250	392	401					331						93

* Nominal value, see kN for the exact force

EURO PRESS PACK • Via M. Disma, 87 • 16042 Carasco (GE) ITALY
Tel. 0039 0185 35 271 • Fax 0039 0185 35 11 38

COS

HIGH TONNAGE CYLINDERS, OIL RETURN

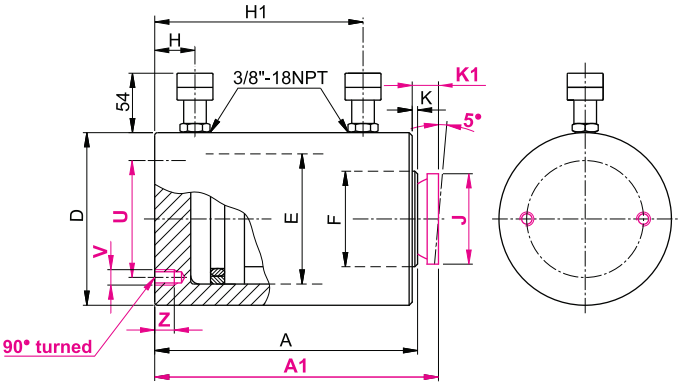

Force	**50 - 500 t**
Stroke	**25 - 300 mm**
Max working pressure	**700 bar**

Cylinders with non standard **force** and **stroke** can be supplied upon request

SELECTION CHART

Pushing force t* kN	Pulling force t* kN	Stroke mm	Pushing oil volume cm³	Pulling oil volume cm³	MODEL	Closed height A mm	Closed height with integrated tilt saddle A1 mm	External Dia. D mm	Piston Dia. E mm	Rod Dia. F mm	Coupler height H mm	Coupler height H1 mm	Integrated tilt saddle Dia. J mm	Rod projection with integrated tilt saddle K mm	Rod projection with integrated tilt saddle K1 mm	PCD mounting holes U mm	Mounting holes_Depth V / Z mm	Weight kg
200 1984	**76** 748	25	709	267	**COS200N25**	181	190	252	190	150	32	117	148	3	12	140	4xM16 20	69
		50	1418	534	**COS200N50**	206	215					142						76
		100	2835	1068	**COS200N100**	256	265					192						92
		150	4253	1602	**COS200N150**	306	315					242						107
		200	5671	2136	**COS200N200**	356	365					292						123
		250	7088	2670	**COS200N250**	406	415					342						138
		300	8506	3204	**COS200N300**	456	465					392						153
250 2424	**85** 835	25	866	298	**COS250N25**	197	206	280	210	170	34	128	158	3	12	150	4xM16 20	92
		50	1732	597	**COS250N50**	222	231					153						102
		100	3464	1194	**COS250N100**	272	281					203						122
		150	5195	1791	**COS250N150**	322	331					253						141
		200	6927	2388	**COS250N200**	372	381					303						161
		250	8659	2985	**COS250N250**	422	431					353						180
		300	10391	3581	**COS250N300**	472	481					403						200
300 2908	**94** 923	25	1039	330	**COS300N25**	203	212	305	230	190	38	130	158	3	12	170	4xM16 20	113
		50	2077	660	**COS300N50**	228	237					155						125
		100	4155	1319	**COS300N100**	278	287					205						148
		150	6232	1979	**COS300N150**	328	337					255						172
		200	8310	2639	**COS300N200**	378	387					305						195
		250	10387	3299	**COS300N250**	428	437					355						219
		300	12464	3958	**COS300N300**	478	487					405						242

* Nominal value, see kN for the exact force

EURO PRESS PACK • Via M. Disma, 87 • 16042 Carasco (GE) ITALY
Tel. 0039 0185 35 271 • Fax 0039 0185 35 11 38

Euro Press Pack

COS

HIGH TONNAGE CYLINDERS, OIL RETURN

SELECTION CHART

Pushing force t* kN	Pulling force t* kN	Stroke mm	Pushing oil volume cm³	Pulling oil volume cm³	MODEL	Closed height A mm	Closed height with integrated tilt saddle A1 mm	External Dia. D mm	Piston Dia. E mm	Rod Dia. F mm	Coupler height H mm	Coupler height H1 mm	Integrated tilt saddle Dia. J mm	Rod projection with integrated tilt saddle K mm	Rod projection with integrated tilt saddle K1 mm	PCD mounting holes U mm	Mounting holes_Depth V / Z mm	Weight kg
350 3436	103 1011	25	1227	361	COS350N25	210	222	332	250	210	39	132	196	3	15	200	4xM16 20	138
		50	2454	723	COS350N50	235	247					157						153
		100	4909	1445	COS350N100	285	297					207						183
		150	7363	2168	COS350N150	335	347					257						213
		200	9817	2890	COS350N200	385	397					307						242
		250	12272	3613	COS350N250	435	447					357						272
		300	14726	4335	COS350N300	485	497					407						302
400 4008	112 1099	25	1431	393	COS400N25	217	229	356	270	230	42	135	196	3	15	230	4xM16 20	165
		50	2863	785	COS400N50	242	254					160						182
		100	5726	1571	COS400N100	292	304					210						215
		150	8588	2356	COS400N150	342	354					260						248
		200	11451	3142	COS400N200	392	404					310						281
		250	14314	3927	COS400N250	442	454					360						313
		300	17177	4712	COS400N300	492	504					410						346
500 4948	154 1512	25	1767	540	COS500N25	225	237	396	300	250	50	140	196	3	15	250	4xM16 20	212
		50	3534	1080	COS500N50	250	262					165						232
		100	7069	2160	COS500N100	300	312					215						271
		150	10603	3240	COS500N150	350	362					265						312
		200	14137	4320	COS500N200	400	412					315						352
		250	17671	5400	COS500N250	450	462					365						391
		300	21206	6480	COS500N300	500	512					415						431

* Nominal value, see kN for the exact force

ACCESSORIES: ZTT TILT SADDLES

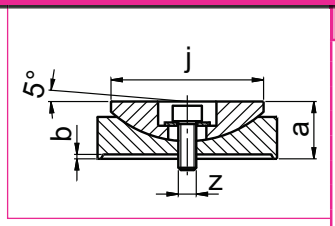

MODEL	For use with	a	b	j	z	kg
ZTT50	COS50N # # #	25	1	68	M8	0,9
ZTT100	COS100N # # #	34	2	88	M10	1,7
ZTT150	COS150N # # #	45	3	118		3,4
ZTT200	COS200N # # #	54	3	148		7,0
ZTT250	COS250N # # #	58		158		9,5
ZTT300	COS300N # # #					11,3
ZTT350	COS350N # # #	71		196	M12	18,0
ZTT400	COS400N # # #					20,7
ZTT500	COS500N # # #					23,8

MODEL CODING

COS	50	N	# # #	#
Series	Pushing **force** in tonne	**N** = standard	**Stroke** in mm	**F** = with base mounting holes **T** = with integrated tilt saddle **

** Cylinders with a force below 100 tonne can be supplied subject to a minimum production batch, to be advised

EURO PRESS PACK • Via M. Disma, 87 • 16042 Carasco (GE) ITALY
Tel. 0039 0185 35 271 • Fax 0039 0185 35 11 38

PUMPS

HOW TO CHOOSE A PUMP

Some essential information is necessary to choose the correct pump. This information is:

- **Reservoir capacity**
- **Cylinder plunger speed**

PUMP SELECTION BASED ON ITS TANK CAPACITY

After having selected the most suitable cylinder and determined the oil volume required for the stroke, it is now necessary to choose the most suitable pump based upon the required oil volume.
This volume can be defined by 1.1 multiplication of the oil volume required for the selected cylinder(s). In the case of double acting cylinders the retraction oil volume shall be subtracted from the volume of oil required to extend the cylinder. Finally, the quantity of oil needed to fill the flexible hoses, i.e. 32 cm3 per meter length, needs to be taken into account.
The following tables will permit an easy choice.

The coloured zones represent the maximum utilisation limits for each pump type.

SINGLE ACTING CYLINDERS

Stroke mm	Force in tons										
	5	10	20	25	30	50	60	100	150	200	250
15											
25											
50											
75	PF120										
100											
125											
150											
175											
200											
225		PL130									
250		PL140	PL131	PL141							
275	PS100										
300									PV1810 PVL1810		
325											
350											
	PF150	PS101	PL132 PL142 PL162			PL164		PL168	PV1820		

DOUBLE ACTING CYLINDERS

Stroke mm	Force in tons										
	5	10 - 15	25	30	50	60	100	150	200	250	300
25											
50											
75											
100											
125											
150											
175											
200											
225											
250											
275											
300											
325											
350											
	PL262						PL264	PL268	PV2810	PV2820	

EURO PRESS PACK • Via M. Disma, 87 • 16042 Carasco (GE) ITALY
Tel. 0039 0185 35 271 • Fax 0039 0185 35 11 38

HOW TO CHOOSE A PUMP

PUMP SELECTION BASED ON CYLINDER SPEED

HAND PUMPS

The data in the following graphs refer to the piston stroke in mm for each pump handle stroke.

PUMP TYPE	Pressure stage	Force in tons										
		5	10	20	25	30	50	60	100	150	200	250
PS100	Single stage	1,4	0,6	0,4	0,3	0,2	0,1	-	-	-	-	-
PL130	Single stage	2,0	0,9	0,5	0,4	0,3	0,2	-	-	-	-	-
PF120	Single stage	3,1	1,4	0,8	0,7	0,5	0,3	0,3	0,2	-	-	-
PS101	Single stage	3,3	1,4	0,8	0,7	0,5	0,3	0,3	0,2	-	-	-
PL13#	Single stage	4,8	2,1	1,2	1,0	0,8	0,5	0,4	0,3	0,2	-	-
PL140	1°	20,8	9,2	5,2	4,4	3,3	2,1	-	-	-	-	-
	2°	1,6	0,7	0,4	0,3	0,2	0,2	-	-	-	-	-
PF150	1°	14,6	6,5	3,6	3,1	2,3	1,5	1,2	0,8	-	-	-
	2°	3,1	1,4	0,8	0,7	0,5	0,3	0,3	0,2	-	-	-
PL14#	1°	19,4	8,6	4,8	4,1	3,1	1,9	1,6	1,0	-	-	-
	2°	3,0	1,3	0,7	0,6	0,5	0,3	0,2	0,2	-	-	-
PL16#	1°	45,3	20,1	11,3	9,6	7,2	4,5	3,8	2,4	1,6	-	-
	2°	4,2	1,9	1,1	0,9	0,7	0,4	0,4	0,2	0,1	-	-
PV18# PVL18#	1°	176,8	78,6	44,2	37,7	28,3	17,6	14,8	9,4	6,2	4,4	3,6
	2°	6,8	3,0	1,7	1,4	1,1	0,7	0,6	0,4	0,2	0,2	0,1

MOTOR DRIVEN PUMPS

The data in the following chart refer to the piston speed in mm per second.

PUMP TYPE	Pressure stage	Force in tons														
		5	10	20	25	30	50	60	100	150	200	250	300	350	400	500
MC	Single stage	5,0	2,2	1,2	1,1	0,8	0,5	0,4	0,3	0,2	-	-	-	-	-	-
MD	1°	56,6	25,2	14,1	12,1	9,1	5,6	4,7	3,0	2,0	1,4	1,2	1,0	0,8	0,7	0,6
	2°	9,4	4,2	2,4	2,0	1,5	0,9	0,8	0,5	0,3	0,2	0,2	0,2	0,1	0,1	0,1
MD # H	1°	141,5	62,9	35,4	30,1	22,6	14,1	11,9	7,5	5,0	3,5	2,9	2,4	2,0	1,7	1,4
	2°	14,1	6,3	3,5	3,0	2,3	1,4	1,2	0,8	0,5	0,4	0,3	0,2	0,2	0,2	0,1
A	1°	21,2	9,4	5,3	4,5	3,4	2,1	1,8	1,1	0,7	0,5	0,4	0,4	0,3	0,3	0,2
	2°	10,6	4,7	2,7	2,3	1,7	1,1	0,9	0,6	0,4	0,3	0,2	0,2	0,2	0,1	0,1
B	1°	110,8	49,3	27,7	23,6	17,7	11,1	9,3	5,9	3,9	2,8	2,3	1,9	1,6	1,4	1,1
	2°	10,6	4,7	2,7	2,3	1,7	1,1	0,9	0,6	0,4	0,3	0,2	0,2	0,2	0,1	0,1
C	Single stage	21,2	9,4	5,3	4,5	3,4	2,1	1,8	1,1	0,7	0,5	0,4	0,4	0,3	0,3	0,2
D	1°	42,4	18,9	10,6	9,0	6,8	4,2	3,6	2,3	1,5	1,1	0,9	0,7	0,6	0,5	0,4
	2°	21,2	9,4	5,3	4,5	3,4	2,1	1,8	1,1	0,7	0,5	0,4	0,4	0,3	0,3	0,2
H	1°	56,6	25,2	14,1	12,1	9,1	5,6	4,7	3,0	2,0	1,4	1,2	1,0	0,8	0,7	0,6
	2°	21,2	9,4	5,3	4,5	3,4	2,1	1,8	1,1	0,7	0,5	0,4	0,4	0,3	0,3	0,2
E	1°	221,6	98,5	55,4	47,2	35,5	22,1	18,6	11,8	7,8	5,5	4,5	3,8	3,2	2,7	2,2
	2°	21,2	9,4	5,3	4,5	3,4	2,1	1,8	1,1	0,7	0,5	0,4	0,4	0,3	0,3	0,2
F	Single stage	42,4	18,9	10,6	9,0	6,8	4,2	3,6	2,3	1,5	1,1	0,9	0,7	0,6	0,5	0,4
G	1°	110,8	49,3	27,7	23,6	17,7	11,1	9,3	5,9	3,9	2,8	2,3	1,9	1,6	1,4	1,1
	2°	42,4	18,9	10,6	9,0	6,8	4,2	3,6	2,3	1,5	1,1	0,9	0,7	0,6	0,5	0,4
L	Single stage	37,7	16,8	9,4	8,0	6,0	3,8	3,2	2,0	1,3	0,9	0,8	0,6	0,5	0,5	0,4
K	1°	273,5	121,6	68,4	58,3	43,8	27,3	22,9	14,6	9,6	6,8	5,6	4,7	3,9	3,4	2,7
	2°	37,7	16,8	9,4	8	6	3,8	3,2	2	1,3	0,9	0,8	0,6	0,5	0,5	0,4
T	1°	235,7	104,8	59,0	50,2	37,7	23,5	19,8	12,6	8,3	5,9	4,8	4,0	3,4	2,9	2,4
	2°	42,4	18,9	10,6	9,0	6,8	4,2	3,6	2,3	1,5	1,1	0,9	0,7	0,6	0,5	0,4
V	1°	235,7	104,8	59,0	50,2	37,7	23,5	19,8	12,6	8,3	5,9	4,8	4,0	3,4	2,9	2,4
	2°	58,9	26,2	14,7	12,6	9,4	5,9	4,9	3,1	2,1	1,5	1,2	1,0	0,8	0,7	0,6

EURO PRESS PACK • Via M. Disma, 87 • 16042 Carasco (GE) ITALY
Tel. 0039 0185 35 271 • Fax 0039 0185 35 11 38

COMPONENTS OF AN HYDRAULIC SYSTEM

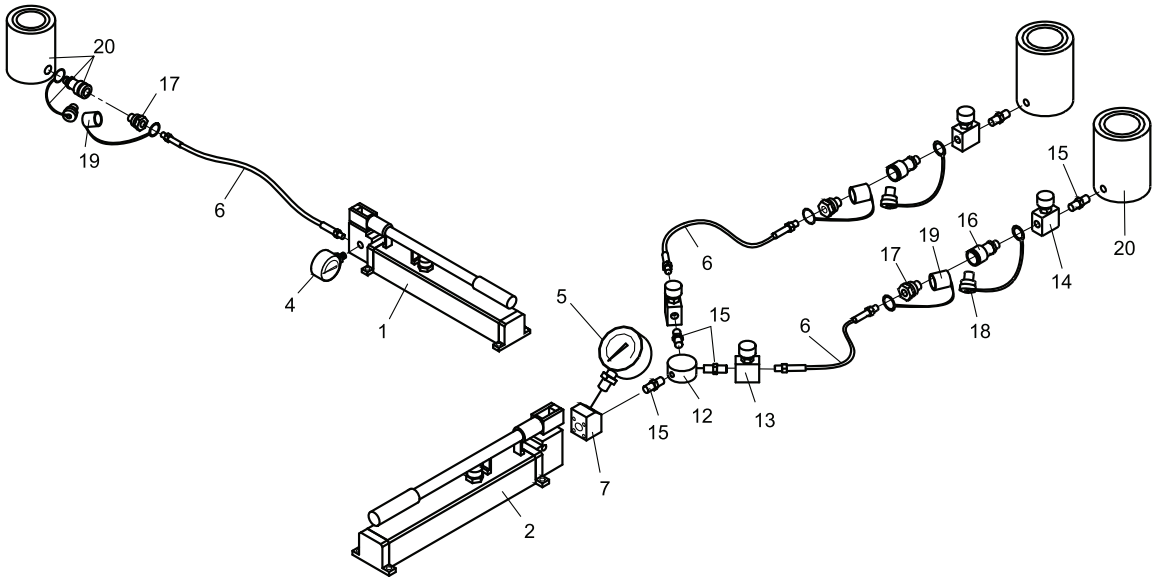

1 Hand pump with side mounted gauge
2 Hand pump with front mounted gauge
3 Power pack
4 G106L gauge
5 G10 gauge
6 SN# hose, 3/8" NPT
7 ZPF12 gauge adapter (flange connection)
8 RP50 gauge block
9 RP502 gauge block
10 VRF384 four-way needle valve
11 RM387 manifold
12 RK383 radial manifold
13 VRF38 needle valve
14 VRU38 flow control valve
15 RN38 nipple
16 K73F female coupler
17 K73M male coupler
18 K73C female dust cap
19 K73D male dust cap
20 Single-acting cylinder
21 Double-acting cylinder

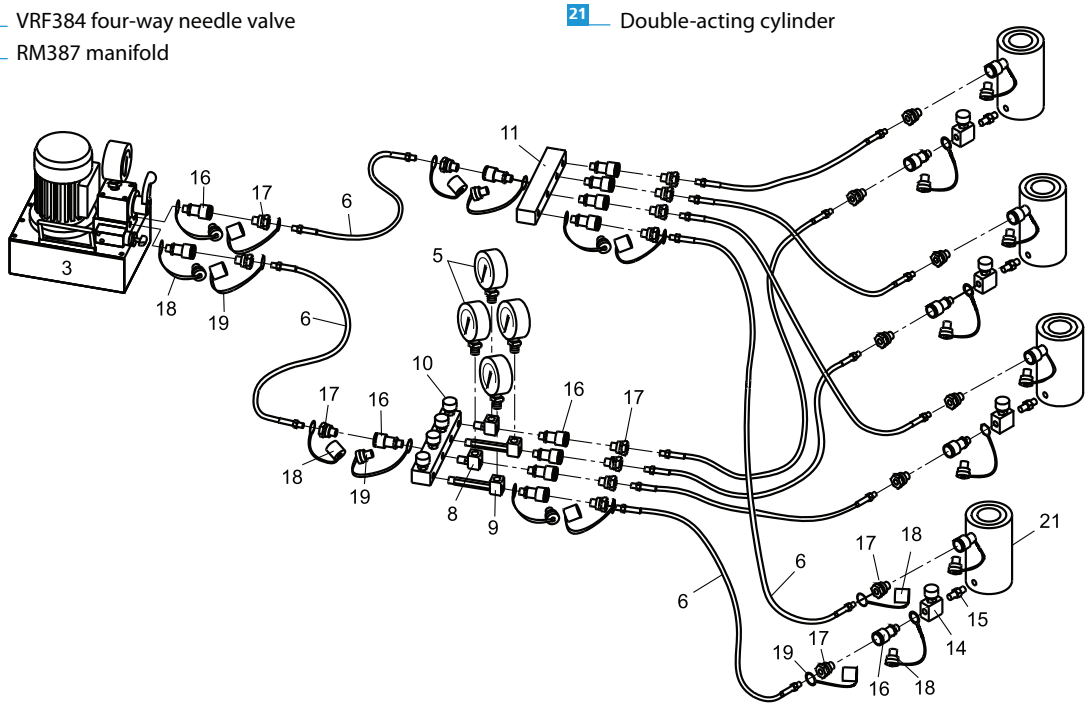

EURO PRESS PACK • Via M. Disma, 87 • 16042 Carasco (GE) ITALY
Tel. 0039 0185 35 271 • Fax 0039 0185 35 11 38

HYDRAULIC PUMPS

Manual and foot pumps

PF ..... p. 48
PL ..... p. 49
PP ..... p. 52
PS ..... p. 53
PV ..... p. 54
PVL ..... p. 55

Air-hydraulic pumps

MLP ..... p. 56

Compact electric pumps

MC ..... p. 60
MD ..... p. 62
MDW ..... p. 65

Modular hydraulic power packs.....p. 67

ME/MM-PP ..... p. 69
ME ..... p. 70
MM ..... p. 72
MP ..... p. 73
MS ..... p. 74
VMM-VME ..... p. 75
VMS-VMP ..... p. 76
Accessori ..... p. 77

Synchronous lifting systems

Synchrolift ..... p. 78
Split Flow ..... p. 80

EURO PRESS PACK • Via M. Disma, 87 • 16042 Carasco (GE) ITALY
Tel. 0039 0185 35 271 • Fax 0039 0185 35 11 38

PF

Euro Press Pack

LIGHTWEIGHT ALLOY FOOT PUMPS 700 BAR

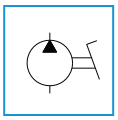

- Reservoir Capacity **0,24 - 0,5 l**
- Oil delivery per stroke in HP **2,2 cm³**
- Max Pressure **700 bar**

FEATURES

This aluminium pump is lightweight simple to use, strong and easy to maintain.
Available in single-stage and double-stage versions to reduce approaching times.

It is equipped with:
- Externally adjustable relief valve
- Steel base plate with antislip pads which may be removed, if the pump is mounted onto to a flat surface
- 1/4" NPT gauge port for direct installation of a pressure gauge on the pump head

APPLICATIONS

This pump is for use with small tools for folding, drilling and pressing of pipes, and metal sheets.
This pump is recommended when the operator needs to keep his hands free.

OPTION

- **G version** pump with pressure gauge **G106L** directly mounted on pump head (**PF120G**).

STANDARD

- **1/4" NPT** gauge port for direct fitting of the pressure gauge on the pump head.

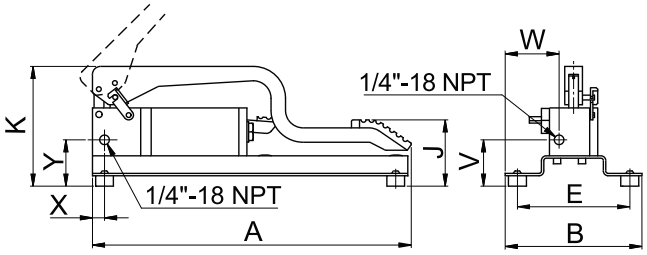

SELECTION CHART

Pressure 1st stage	Pressure 2nd stage	Oil Delivery 1st stage	Oil Delivery 2nd stage	Effort on pedal	For use with	Reservoir capacity	Usable oil volume	MODEL	Dimensions mm								Weight
bar	bar	cm³	cm³	N		litri	litri		A	B	J	K	V	X	Y	W	kg
-	700	-	2,2	490	Single acting	0,24	0,19	PF120	400	200	56-350	155	56	15	56	83	3,5
20		10,3		560		0,50	0,40	PF150				175				75	4,5

EURO PRESS PACK • Via M. Disma, 87 • 16042 Carasco (GE) ITALY
Tel. 0039 0185 35 271 • Fax 0039 0185 35 11 38

LIGHTWEIGHT HAND PUMPS 700 - 1000 - 1600 - 2800 BAR

FEATURES

The main quality of PL is their lightness (**their weight is reduced of over 50% when compared to traditional products**) They are made from light alloy metal that is normally used in the aviation field due to its mechanical resistance. Because of this, PL pumps are extremely handy and stand out because of **a very low effort on their handle.**

All 700 bar models have:
- Externally adjustable relief valve.
- Side port for the direct fitting of the gauge (PL26# range excluded).
- Carry handle and fixing holes .

Available with 0,7 - 1,3 – 2,3 - 4,3 e 7,8 lt. tank.

All 1000/1600/2800 bar models have:
- Double stage
- Externally adjustable low and high pressur relief valves
- Second port (also usable as gauge port) only PL16#28.
- Carry handle and fixing holes.

Available with 2,3 - 4,3 e 7,8 lt. tank.

All **PL** pumps can work vertically with the pumping head pointing downward.

APPLICATIONS

- **PL13# Series**
  Single stage pumps with 0,7 –1,3 – 2,3 lt. reservoirs, for **single acting** cylinders with short strokes and small/medium oil capacities.
- **PL14# Series**
  Double stage pumps with 0,7 – 1,3 – 2,3 lt. reservoirs, pressure relief valve in the first stage, for **single acting** cylinders with medium strokes and medium oil capacities.
- **PL16# Series**
  Double stage pumps with 2,3 – 4,3 – 7,8 lt. reservoirs, unloading valve for ease of pumping in the second stage; for **single acting** cylinders with long strokes and large oil capacities.
- **PL26# Series**
  Double stage pumps with 2,3 – 4,3 – 7,8 lt. reservoirs, unloading valve for ease of pumping in the second stage; with **4 way** valve, for **double acting** cylinders with long strokes and large oil capacities.
- **PL16#10 Series**
  Used in extracting operations, in lab tests and to operate hydraulic bolt tensioners model **UTN** and **UTH**
- **PL16#16 Series**
  Used in all bearings extractions and to operate hydraulic bolt tensioners model **UTV**.
- **PL16#28 Series**
  Particularly useful in pressing on and pulling off drive elements, crimping operations, when pretentioning of studs, in burst and calibration tests.
  It has an innovative and special pre-storage device of the internal pressure® which enables them to use fluids with a **viscosity up to 1200 cSt**. This device is an Europresspack patent

STANDARD

1/4" NPT side port for direct connection of the gauge in the pump body of 700 bar pumps (apart from the PL26# series).

OPTION

G Version 700 bar pump with **G106L** gauge, already fitted in the body (apart from the PL26# series).

Please refer to the paragraph "How to choose a pump" for a better pump-cylinder matching.

p. 44

On request versions to be used with fluids other than mineral oil can be supplied.

EURO PRESS PACK • Via M. Disma, 87 • 16042 Carasco (GE) ITALY
Tel. 0039 0185 35 271 • Fax 0039 0185 35 11 38

PL

Euro Press Pack

LIGHTWEIGHT HAND PUMPS 700 - 1000 - 1600 - 2800 BAR

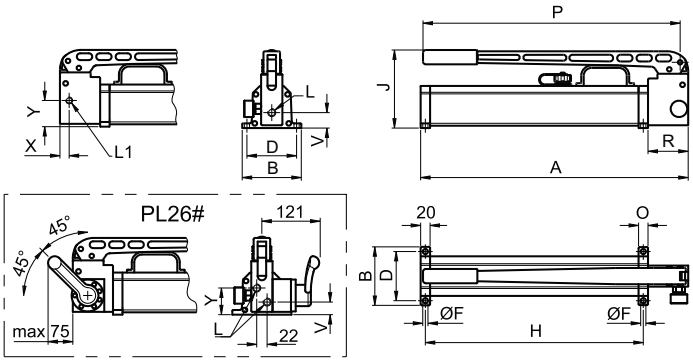

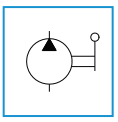

- Reservoir capacity **0,7 - 7,8 l**
- Oil delivery per stroke in HP **0,9 - 3,4 cm³**
- Max working pressure **700 - 1000 - 1600 - 2800 bar**

SELECTION CHART

Pressure 1st stage	Pressure 2st stage	Oil delivery per stroke 1st stage	Oil delivery per stroke 2nd stage	Handle effort	For use with cylinders	Reservoir capacity	Usable oil volume	MODEL	Dimensions mm A	B	D	H	F	J	L	L1	O	P	R	V	X	Y	weight
bar	bar	cm³	cm³	N		litres	litres		A	B	D	H	F	J	L	L1	O	P	R	V	X	Y	kg
-	700	-	1,4	426	Single acting	0,7	0,5	PL130	342	110	90	275	11	135	3/8"-18 NPT	1/4"-18 NPT	67	330	-	30	14	44	3,4
			3,4	363		1,3	1,1	PL131	563			461		147			20	544	80	34	19,5	47	5,0
						2,3	1,9	PL132		125	105			167						54		67	6,4
20		14,7	1,1	455		0,7	0,5	PL140	342	110	90	275	11	135	3/8"-18 NPT	1/4"-18 NPT	67	330	-	30	14	44	3,4
30		13,7	2,1	380		1,3	1,1	PL141	563			461		147			20	544	80	34	19,5	47	5,0
						2,3	1,9	PL142		125	105			167						54		67	6,4
70		32	3,0	363		2,3	1,9	PL162	566	125	105	461	11	167	3/8"-18 NPT	1/4"-18 NPT	20	544	85	33	19.5	56	6,8
						4,3	3,8	PL164	576	190	176	471	9	177									10,0
						7,8	7,2	PL168	656	270	256	551											14,7
70		32	3,0	363	Double acting	2,3	1,9	PL262	566	125	105	461	11	167	3/8"-18 NPT	-	20	544	85	27	-	57	7,6
						4,3	3,8	PL264	576	190	176	471	9	177									10,8
						7,8	7,2	PL268	656	270	256	551											15,5
20	1000	32	1,6	385	Not suitable for lifting	2,3	1,9	PL16210	566	125	105	461	11	167	1/4" BSP 120°	-	20	544	85	33	-	-	6,8
						4,3	3,8	PL16410	576	190	176	471	9	177									10,0
						7,8	7,2	PL16810	656	270	256	551											14,7
15	1600	32	1,6	522		2,3	1,9	PL16216	566	125	105	461	11	167	1/4" BSP 120°	-	20	544	85	33	-	-	6,8
						4,3	3,8	PL16416	576	190	176	471	9	177									10,0
						7,8	7,2	PL16816	656	270	256	551											14,7
15	2800	32	0,9	515		2,3	1,9	PL16228	566	125	105	461	11	167	3/4"-16 UNF	3/4"-16 UNF	20	544	85	47	26,5	47	7,0
						4,3	3,8	PL16428	576	190	176	471	9	177									10,2
						7,8	7,2	PL16828	656	270	256	551											14,9

MODEL CODING

PL	13	#	-	G
SERIES	Pump type	**Reservoir capacity - litres**	**-** Max pressure 700 bar **16** Max pressure 1600 bar **10** Max pressure 1000 bar **28** Max pressure 2800 bar	Gauge (only for 700 bar pumps)

EURO PRESS PACK • Via M. Disma, 87 • 16042 Carasco (GE) ITALY
Tel. 0039 0185 35 271 • Fax 0039 0185 35 11 38

LIGHTWEIGHT HAND PUMPS 700 – 1000 – 1600 – 2800 BAR

ACCESSORIES 700 bar

- **ZPS12** Adapter for **G10** gauge with screw connection.
- **ZPF12** Adapter for **G10** gauge with flange connection.
- **ZPF121** Adapter for **G10** with plate connection.

ACCESSORIES 1000 - 1600 - 2800 bar

- **ZPS53** Adapter for gauge with screw connection.
- **ZPF14** Adapter for gauge with flange connection.
- **ZPF73** Adapter for gauge with flange connection.
- **ZPD16** Flanges double needle valve to split the flow in two ways.
- **ZPD28** Flanges double needle valve to split the flow in two ways.

ACCESSORIES: ZPS - ZPF GAUGE ADAPTORS - 700 BAR

	MODEL	For pumps	a	b	c	d	e	kg
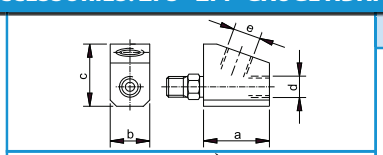	**ZPS12** (screw connection)	SERIES **PL13#** **PL14#** **PL16#**	50	30	48	3/8" NPT	1/2" BSP	0,25
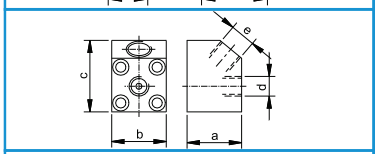	**ZPF12** (flange connection)	SERIES **PL16#**	45	45	60	3/8" NPT	1/2" BSP	0,90
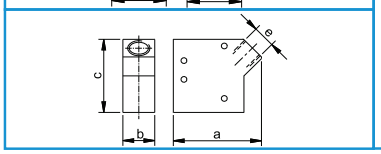	**ZPF121** (plate connection)	SERIES **PL26#**	83	30	70	-	1/2" BSP	0,37

ACCESSORIES: ZPS - ZPF GAUGE ADAPTERS - ZPD VALVES -1000/1600/2800 BAR

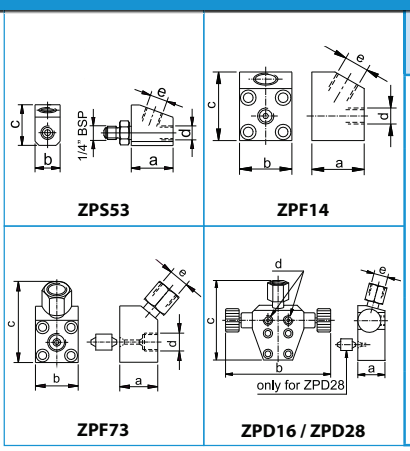

ZPS53 | ZPF14 | ZPF73 | ZPD16 / ZPD28

MODEL	For pumps	For gauge	Max. press.	a	b	c	d	e	kg
ZPS53 (screw connection gauge adapter)	SERIES **PL16#10** **PL16#16**	G10	1000	50	30	48	3/8" NPT	1/2" BSP	0,9
ZPF14 (Flanged gauge adapter)	SERIES **PL16#10** **PL16#16**	G10 G16	1600	45	45	60	1/4" BSP 120°	1/2" BSP	0,9
ZPF73 (Flanged gauge adapter)	SERIES **PL16#28**	G30 / G40+RN28	2800	40	45	85	3/4" -16UNF	1/2" BSP swivelling	1,0
ZPD16 (Double needle flanged valve)	SERIES **PL16#10** **PL16#16**	G10 G16	1600	40	155	112	1/4" BSP 120°	1/2" BSP swivelling	1,0
ZPD28 (Double needle flanged valve)	SERIES **PL16#28**	G30 / G40+RN28	2800						

EURO PRESS PACK • Via M. Disma, 87 • 16042 Carasco (GE) ITALY
Tel. 0039 0185 35 271 • Fax 0039 0185 35 11 38

PP

Euro Press Pack

HAND PUMPS FOR DIVERSIFIED APPLICATIONS 700 - 1400 BAR

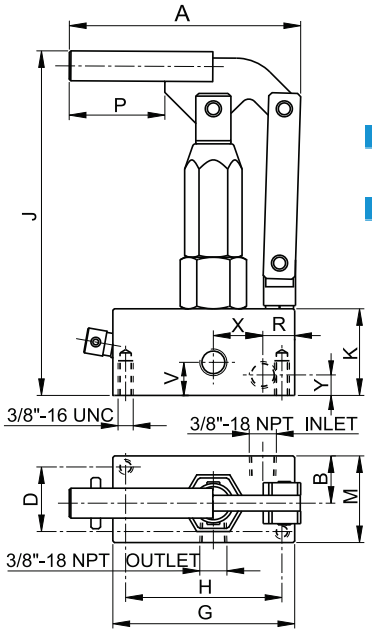

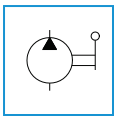

- Oil Delivery per stroke in HP — **2,1 - 4,5 cm³**
- Max working pressure — **700 - 1400 bar**

FEATURES

Single-stage, tankless Hand Pumps, are lightweight and easy to handle (their weight is less than 5kg for the standard version and 6kg for the INOX version).
All Models are equipped with:

- 490 mm removable activation handle, used to turn the bypass valve on through the front connection.
- Fixing holes on the base.
- 3/8"-18 NPT side ports for oil inlet and outlet.
- All standard pump components, either internal or external, undergo the EUROPRESS exclusive thermo-chemical treatment, named Nitreg-ONC®, which makes steel exceptionally hard, resistant to corrosion and mechanical wear.

The PP113 Pump is also available in stainless steel for use with water, and with different pump heads to be used at pressures lower than 700 bar (on demand)

OPERATIONAL FEATURES

Particularly functional to be used with small assembly room applications, and to be installed either on machines or in circuits already equipped with their own reservoir.

SELECTION CHART

Max Pressure	Oil Delivery per stroke	Handle Effort	To be used with	To use with	MODEL	Dimensions mm													Weight
bar	cm³	N				A	B	D	G	H	J	K	M	P	R	V	X	Y	kg
1400	2,1	649	Oil	Single and double acting cylinders	**PP109**	145	30	41	114	98	219	55	55	60	20	21	31	13	4,8
700	4,5	677	Oil	Single and double acting cylinders	**PP113**	145	30	41	114	98	219	55	55	60	20	21	31	13	4,8
700	4,5	677	Water	Single and double acting cylinders	**PP113SS**	145	30	41	114	98	219	60	60	60	20	26	31	18	5,6

EURO PRESS PACK • Via M. Disma, 87 • 16042 Carasco (GE) ITALY
Tel. 0039 0185 35 271 • Fax 0039 0185 35 11 38

STEEL HAND PUMPS 400 - 700 - 1000 BAR

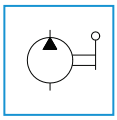

- Reservoir Capacity **0,42 - 0,8 l**
- Oil Delivery per Stroke in HP **1,0 - 2,3 cm³**
- Max working pressure **400 - 700 - 1000 bar**

FEATURES

Easy to use robust hand pumps in steel requiring moderate handle effort.
They are available in four models, with three pressure ratings, 400 - 700 - 1000 bar.
These pumps can also operate in vertical position with head downwards.

All models are equipped with:
- External adjustable safety valve
- Wide feet for ease of mounting
- Handle locking mechanism for ease of carrying

Available with 0,42 - 0,8 lt. reservoirs depending on the model.

APPLICATIONS

These pumps are ideal to be used with small hydraulic tools and / or single acting cylinders that require a small amount of oil.

STANDARD

- All **PS** pumps have the head drilled to accept pressure gauge **G106L**.

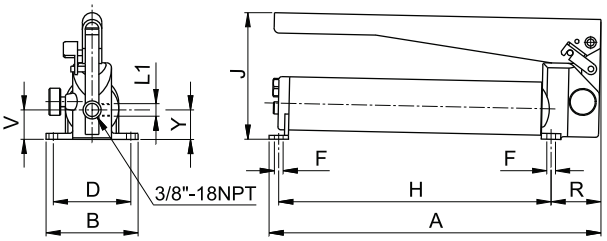

SELECTION CHART

Max pressure	Oil delivery per stroke	Handle Effort	For use with	Reservoir Capacity	Usable Oil Volume	MODEL	Dimensions mm										Weight
bar	cm³	N		cm³	cm³		A	B	D	F	H	J	L1	R	V	Y	kg
700	1,0	280	Single acting	420	300	PS100	340	95	80	9	280	130	1/4" NPT	50	32,5	32,5	3,2
1000		380				PS10010											
400	2,3	350		420	300	PS10004	340				280						
700		390		800	700	PS101	565				505						4,5

MODEL CODE

PS	10	0	# #
Series	Pump type	Reservoir capacity in litres	Pressure if other than 700 bar

EURO PRESS PACK • Via M. Disma, 87 • 16042 Carasco (GE) ITALY
Tel. 0039 0185 35 271 • Fax 0039 0185 35 11 38

PV

Euro Press Pack

STEEL HAND PUMPS WITH LARGE OIL DELIVERY 700 BAR

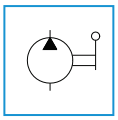

- Reservoir Capacity **9,3 - 19,4 l**
- Oil Delivery per Stroke in HP **4,8 cm ³**
- Max Pressure **700 bar**

FEATURES

Two-stage hand pumps with automatic change-over from the 1st to the 2nd stage that require a moderate effort on the handle to reach maximum working pressure.
All models are equipped with:

- Relief valve
- Carry handle
- 1/2" BSP connection for pressure gauge

Available with 10 or 20 litre reservoirs and 3-way, 4-way and 4-way with controlled check valves.

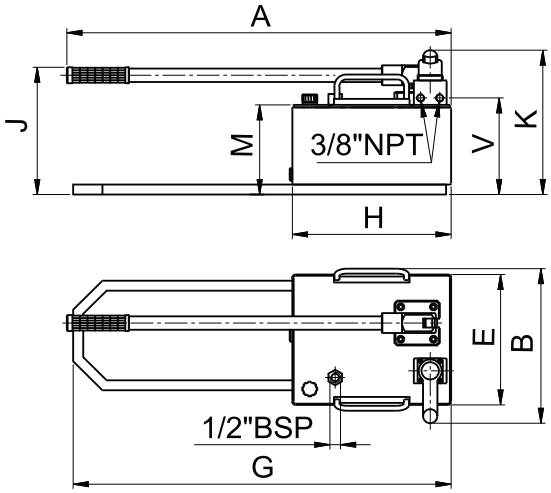

OPERATIONAL AREAS

These pumps are ideal in all those applications where both cheapness and handiness as well as higher flow and tank capacity are required, if compared to electric or pneumatic power packs and to PL hand pumps.

OPTIONS

Version G Pump with pressure gauge **G10 (PV # G).**

SELECTION CHART

Pressure 1st stage	Pressure 2nd stage	Oil Delivery 1st stage	Oil Delivery 2nd stage	Handle Effort	For use with	Reservoir Capacity	Usable Oil Volume	MODEL	Dimensions mm									Weight without oil	Weight with oil
bar	bar	cm³	cm³	N		litri	litri		A	B	E	G	H	J	K	M	V	kg	kg
20	700	125	4,8	450	Single acting	9,3	7,7	PV1810	763	261	245	750	315	257	290	180	194	20,9	29
						19,4	16	PV1820				-	650	245	278	168	182	23,1	40
					Double acting	9,3	7,7	PV2810		313		750	315	257	290	180	194	20,9	29
						19,4	16	PV2820				-	650	245	278	168	182	23,1	40
					Double acting with controlled check valve	9,3	7,7	PV4810				750	315	257	290	180	194	20,9	29
						19,4	16	PV4820				-	650	245	278	168	182	23,1	40

EURO PRESS PACK • Via M. Disma, 87 • 16042 Carasco (GE) ITALY
Tel. 0039 0185 35 271 • Fax 0039 0185 35 11 38

STEEL HAND PUMPS WITH LARGE OIL DELIVERY AND LIGHTWEIGHT ALLOY RESERVOIR 700 BAR

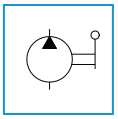

- Reservoir Capacity **10 l**
- Oil Delivery per stroke in HP **4,8 cm³**
- Max Pressure **700 bar**

FEATURES

Two-stage hand pumps with a valve that allows automatic change from 1st to 2nd stage. It requires only a moderate effort on the handle to reach the maximum working pressure.
All models are equipped with:

- Relief valve
- Carrying handle
- Light alloy reservoir (it helps reduce considerably pump weight)
- ½" BSP connection for pressure gauge

Available with 3-way, 4-way, and 4-way with controlled check valves.

OPERATIONAL AREAS

These pumps have a bigger flow and capacity compared to the PL hand pumps but they are also a very good alternative to the PV hand pumps when weight is a significant factor of choice.

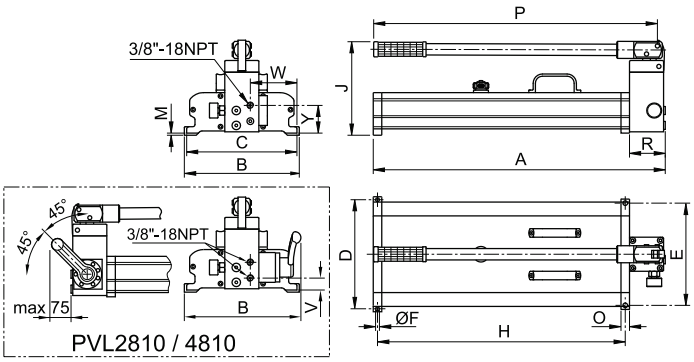

SELECTION CHART

Pressure 1st stage	Pressure 2nd stage	Oil Delivery 1st stage	Oil Delivery 2nd stage	Handle Effort	To be used with	Reservoir Capacity	Usable Oil volume	MODEL	Dimensions mm															Weight without oil	Weight with oil
bar	bar	cm³	cm³	N		Litres	Litres		A	B	C	D	E	F	H	J	M	O	P	R	V	W	Y	kg	kg
20	700	125	4,8	420	Single acting cylinders	9,5	8,3	PVL1810	790	270	259	256	240	9	686	223	5	20	770	84	28	110	65	15,7	24
					Double acting cylinders			PVL2810		274														16,2	24,5
					Double acting cylinders with controlled check valve			PVL4810		306														16,7	25

ACCESSOIRES: MANOMETER ADAPTERS

ACCESSOIRES

- **ZPS12** Gauge adapter (for gauge **G10**) with screw connection.
  ZPF121 Gauge adapter (for gauge **G10**) with plate connection.

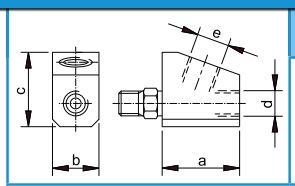

MODEL	For pumps	a	b	c	d	e	kg
ZPS12 (screw connection)	**PVL1810 PVL2810 PVL4810**	50	30	48	3/8" NPT	1/2" BSP	0,25

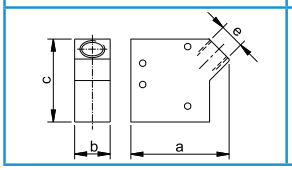

MODEL	For pumps	a	b	c	d	e	kg
ZPF121 (plate connection)	**PVL2810 PVL4810**	83	30	70	-	1/2" BSP	0,37

EURO PRESS PACK • Via M. Disma, 87 • 16042 Carasco (GE) ITALY
Tel. 0039 0185 35 271 • Fax 0039 0185 35 11 38

MLP

AIR-HYDRAULIC PUMPS FROM 80 TO 2100 BAR

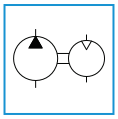

- Reservoir Capacity **2,4 - 5 - 10 l**
- Max Pressure **80 - 350 - 700 - 1000 - 1500 - 2100 bar**
- Inlet Air Pressure **2,8 - 8,5 bar**
- Air Consumption **500 - 2100 l/min**

FEATURES

Air- hydraulic pumps are extremely light and versatile. Tests results show how exceptionally reliable and suitable they are for the most difficult uses thanks to their unique design (series SA, MA, HA, TA, VA, made of plastic material outside and metal alloy inside).
There are six multiplying factors: 19:1, 60:1, 122.1, 196:1, 278:1, 345:1 for maximum oil pressure values respectively of 80, 350, 700, 1000, 1500, 2100 bar.
All the pumps (version KA excluded) have a maximum pressure valve non adjustable from the outside. The outward pressure can be adjusted varying the inward air pressure.

The four basic version are:
- **MLP0** with P and T outlets, to be used with on-line valves.
- **MLP1** with Cetop 3 plate
- **MLP2** with three-way valve (with control pedal) for single acting cylinders
- **MLP4** with four-way valve (with hand lever) four double acting cylinders.

A series of options can be added to the basic version to complete the pump action. See table page 57.

APPLICATIONS

In the rapid exchange of the equipments on machine tools (80 bar), in hydraulic clamping (80 and 350 bar), in the industrial sector (350 bar), for lifting, maintenance, automotive sector (700 bar) together with bolt tensioner cylinders and hydraulic nuts (1000 and 1500 bar), bearings press fitting, for laboratory and burst tests (1500 and 2100 bar).

STANDARD

- **C cage** on model MLP23KAG.
  G gauge on model MLP23KAG.
  Pressure reducer for air supply on model MLP21VAG and MLP23KAG.

ACCESSORIES

- **ZML14 pressure reducer** for air supply.
  ZMB7 pressure booster, adaptable to the MLP21# to multiply outgoing pressure (Ratio 4:1). Inlet 3/8″ NPT, outlet 3/4″-16 UNF.
  RP52 gauge adaptor for gauge type G106L.

The 2,4 l reservoir is made of plastics, while the 5 and 10 l ones are made of steel.

Follow EUROPRESS safety instructions. See useful pages p. 126

EURO PRESS PACK • Via M. Disma, 87 • 16042 Carasco (GE) ITALY
Tel. 0039 0185 35 271 • Fax 0039 0185 35 11 38

AIR-HYDRAULIC PUMPS FROM 80 TO 2100 BAR

MODEL COMPOSITION CHART

	Description	MODEL	basic versions			
			MLP0	MLP1	MLP2	MLP4
Tank	Tank 2,4 l (excluded **KAG**)	1	•	•	•	•
	Tank 5 l(excluded **KAG**)	2	•	•	•	•
	Tank 10 l	3	•	•	•	•
Working pressure (Delivery)	Working pressure 2100 bar (0,62 - 0,24 l/min)	KA	–	–	•	–
	Working pressure 1500 bar (0,44 - 0,08 l/min)	VA	–	–	•	–
	Working pressure 1000 bar (0,5 – 0,1 l/min)	TA	–	–	•	–
	Working pressure 700 bar (0,8 – 0,16 l/min)	HA	•	–	•	•
	Working pressure 350 bar (1,2 – 0,2 l/min)	MA	•	•	•	•
	Working pressure 100 bar (2,5 – 0,3l/min)	SA	•	•	•	•
Options	Ready for air remote control	B	–	–	•	•
	With gauge inserted on the pump (standard **VAG** and **KAG**)	G	•	–	–	–
	With remote control (excluded **VAG** and **KAG**)	R	–	–	•	•

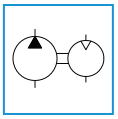

MLP # # SA

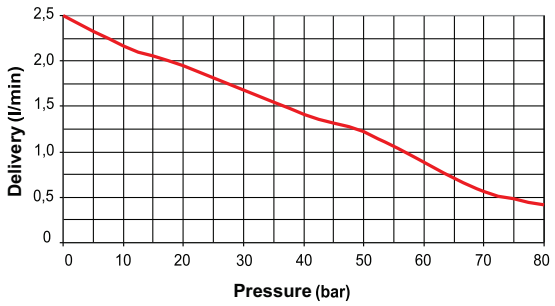

MLP # # MA MLP # # HA MLP # # TA

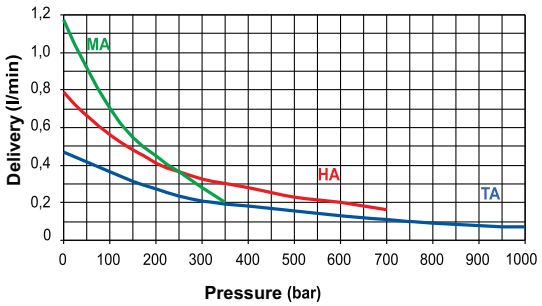

MLP2#VAG

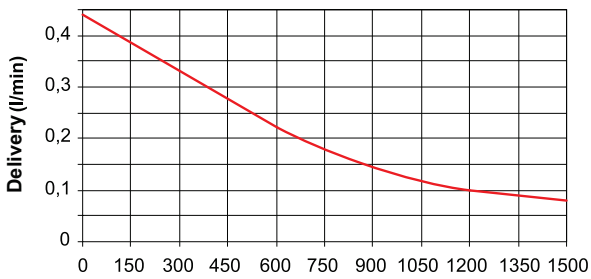

MLP23KAG

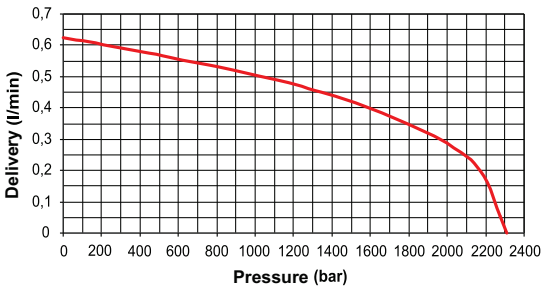

MODEL CODING

Pump version	Tank capacity	Working pressure	Options
MLP2	1	HA	R

EURO PRESS PACK • Via M. Disma, 87 • 16042 Carasco (GE) ITALY
Tel. 0039 0185 35 271 • Fax 0039 0185 35 11 38

MLP

AIR-HYDRAULIC PUMPS FROM 80 TO 1000 BAR

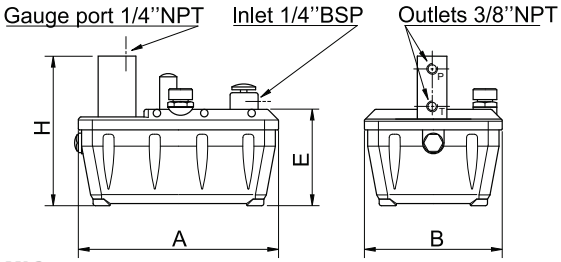

MLP0

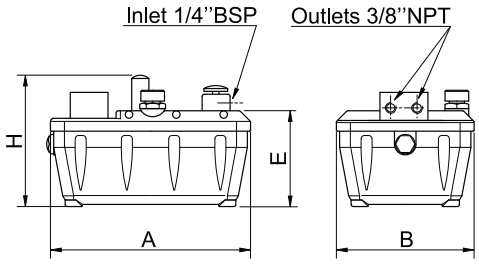

MLP1

CHARACTERISTICS AND DIMENSIONS

Version	Suitable for cylinders	Oil tank	Usable oil volume	MODEL	Dimensions mm				Weight
		litres	litres		A	B	D	H	kg
With P and T block	according to the chosen on-line valve	2,4	1,9	MLP01##	280	190	136	201	4,7
		5	4	MLP02##	315	270	156	221	13,1
		10	8	MLP03##	420	385	156	221	20,5
With Cetop 03 base plate	according to the chosen valve	2,4	1,9	MLP11##	280	190	136	171	4,7
		5	4	MLP12##	315	270	156	191	13,1
		10	8	MLP13##	420	385	156	191	20,5

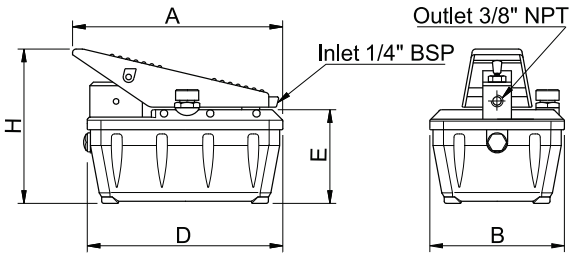

MLP2

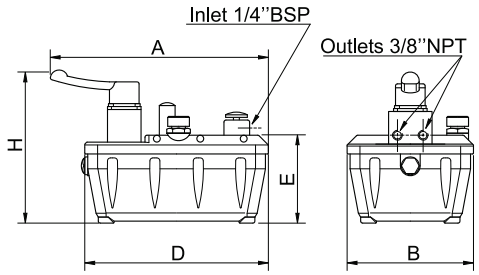

MLP4

CHARACTERISTICS AND DIMENSIONS

Version	Suitable for cylinders	Oil tank	Usable oil volume	MODEL	Dimensions mm					Weight
		litres	litres		A	B	D	E	H	kg
3/3 control pedal valve	Single acting	2,4	1,9	MLP21##	300	190	280	136	220	5,5
		5	4	MLP22##	325	270	315	156	237	13,9
		10	8	MLP23##	420	385	410	156	237	21,3
4/3 manual control valve	Double acting	2,4	1,9	MLP41##	335	190	280	136	240	5,1
		5	4	MLP42##	350	270	315	156	257	13,5
		10	8	MLP43##	420	385	410	156	257	20,9

EURO PRESS PACK • Via M. Disma, 87 • 16042 Carasco (GE) ITALY
Tel. 0039 0185 35 271 • Fax 0039 0185 35 11 38

AIR-HYDRAULIC PUMPS AT 1500 AND 2100 BAR

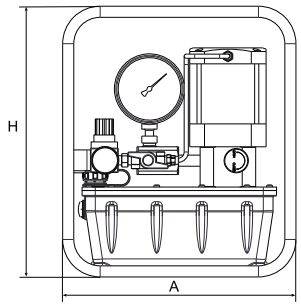

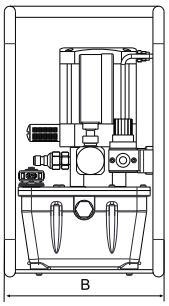

MLP2#VAG

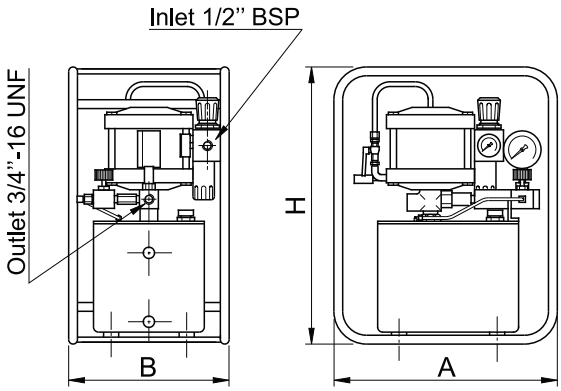

MLP23KAG

CHARACTERISTIC AND DIMENSIONS

Valve	Tank	Usable volume	MODEL	Dimensions mm					Weight
	litres	litres		A	B	D	E	H	kg
3/2 valve manual control	2,4	1,9	MLP21VAG	340	230	-	-	390	15
	5	4	MLP22VAG	495	325	-	-	500	25,7
	10	8	MLP23VAG	580	440	-	-	500	34,3

CHARACTERISTIC AND DIMENSIONS

Valve	Tank	Usable volume	MODEL	Dimensions mm			Weight
	litres	litres		A	B	H	kg
3/2 valve manual control	10	8	MLP23KAG	495	325	580	30

EURO PRESS PACK • Via M. Disma, 87 • 16042 Carasco (GE) ITALY
Tel. 0039 0185 35 271 • Fax 0039 0185 35 11 38

MC

MICRO POWER PACKS 700 BAR

FEATURES

These very small single stage power packs have been specifically designed for small tools.

Their design keeps in consideration the user friendliness.
Lightness, compactness and easiness to use are the best characteristics of this unit.

All models are complete with:
- Single-phase electric motor 230V - 50Hz - 0,25 kW
- 3-way 2 position solenoid.
- Relief Valve.
- Plastic tank
- Plastic casing with integrated handle
- Oil level indicator
- Electric cable 2,5 m. length with Schuko plug
- 3 m. remote control

Power packs with different voltage motors can be supplied upon request.

APPLICATIONS

Micro pumps are ideals to control small tools like mini-presses, shears and nut-cutters.
They are compact and lightweight only 9 kilos therefore perfect in all applications where the pump must be easy to carry.

OPTION

MC5# series series power units with 500 bar setting.

DELIVERY DIAGRAM

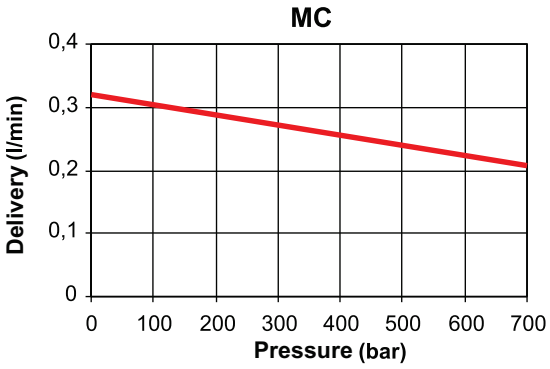

ACCESSORIES

ZMT Carry belt.

p. 107

US series nut cutters when used with Micro power packs form a practical and handy set.

EURO PRESS PACK • Via M. Disma, 87 • 16042 Carasco (GE) ITALY
Tel. 0039 0185 35 271 • Fax 0039 0185 35 11 38

MICRO POWER PACKS 700 BAR

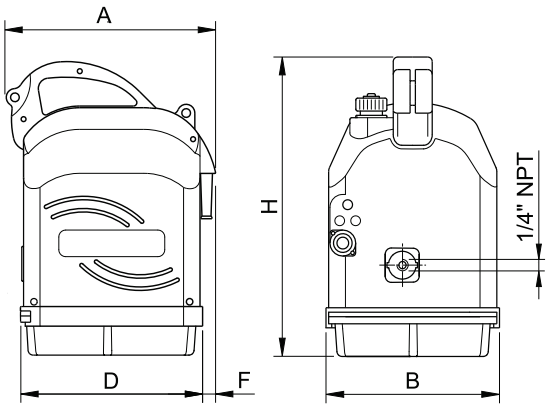

- Reservoir Capacity **1,0 l**
- Delivery at 700 bar **0,21 l/min**
- Power Rating **0,25 kW**
- Max pressure. **700 bar**

SELECTION CHART

Maximum Pressure	Delivery at Minimum Pressure	Delivery at Maximum Pressure	Reservoir Capacity	Usable Oil Volume	MODEL	Dimensions mm					Weight
bar	l/min	l/min	litres	litres		A	B	D	F	H	kg
700	0,32	0,21	1,0	0,8	MC71 MC72 MC73	245	197	212	15	345	9

FUNCTION CHART

MODEL	For use with	Remote Control Function	Symbol
MC71	Single acting	Advance - Return (1 push button)	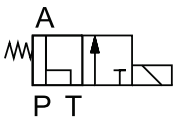
MC72		Advance - Hold - Return (2 push buttons)	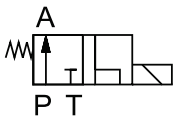
MC73		Advance - Return (1 push button) Integrated control located at the end of the hose assembly	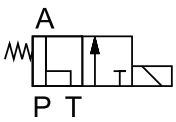

MODEL CODING

MC	7	#
Series	Pressure setting	Control type

EURO PRESS PACK • Via M. Disma, 87 • 16042 Carasco (GE) ITALY
Tel. 0039 0185 35 271 • Fax 0039 0185 35 11 38

Euro Press Pack

MIDI HYDRAULIC POWER PACKS 700 - 1000 - 1500 BAR

FEATURES Series 700 bar

Two-stage Hydraulic Power Packs particularly light and compact with excellent technical characteristics.
A large range of manual and electric controlled valves, allowes them to be used with single and double acting cylinders.
All models are equipped with either:

- Single phase electric motor 230V - 50Hz and 0,75 kW, 2800 rpm
- Plastic reservoir.
- Two-stage piston pump.
- Manual or electric 3 or 4-ways valves with or without pilot check.
- Relief valve.
- Electric cable 5 m.
- Remote control 3 m. (for electric valve)
- Plastic frame with carrying handle (excluding version H)
- Protective cage (only version H) dim. AxBxH 400x250x420e.
- Oil level gauge

FEATURES Series 1000 and 1500 bar

Same characteristics of the 700 bar series a part for:

- Manual or electric 3 ways - 2 positions valve.
- Pressure regulation valve.
- Manometer G16

The following can be requested on demand

- Different voltage motor
- Air operated Motor
- Different capacity Reservoir

OPTIONS series 700 bar

Version R 3m remote control to activate only the motor, in power packs with manual valve series MDM##.

Version H Power pack with high flow pump:
1st stage 6,0 l/min
2nd stage 0,6 l/min
Motor 1,1 kW

Version J with pressure regulation valve.

APPLICATIONS

700 bar Series: Ideal for medium size tools and very easy to handle.
Particolarly suitable to be used with cutters, small presses, pipe bending machines, spreaders etc.

1000 bar Series: Suitable to be used with tensioner mod. **UTN e UTH.**

p. 112

1500 bar Series: Suitable to be used with tensioner mod. **UTV.**

p. 114

OPTIONS series 1000 and 1500 bar

Versione R 3m remote control to operate the motor only.

p. 82

ACCESSORIES

RP52 gauge adaptor for gauge type G106. (700 BAR versions only)

EURO PRESS PACK • Via M. Disma, 87 • 16042 Carasco (GE) ITALY
Tel. 0039 0185 35 271 • Fax 0039 0185 35 11 38

MIDI HYDRAULIC POWER PACKS 700 BAR

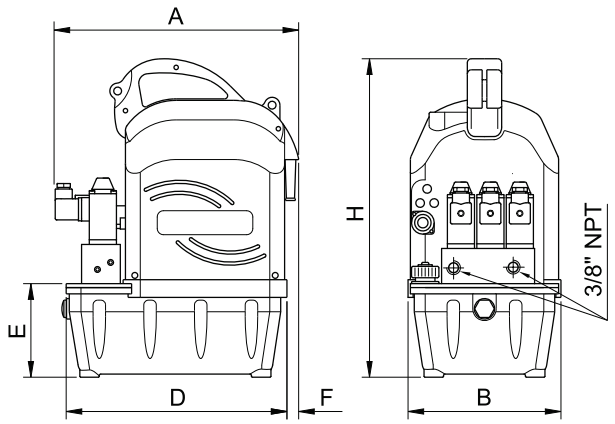

- Reservoir Capacity **2,6 l**
- Delivery at 700 bar **0,4 l/min**
- Power Rating **0,75 - 1,1 kW**
- Max Pressure **700 bar**

SELECTION CHART

Oil delivery		Pressure rating		Reservoir capacity	Usable oil volume	MODEL	Dimensions mm						Weight
1st stage	2nd stage	1st stage	2nd stage										
l/min	l/min	bar	bar	litres	litres		A	B	D	E	F	H	kg
2,4	0,4	65	700	2,6	2,4	MDM21	329	197	287	119	15	406	16
						MDM31	366						16,3
						MDM41							16,3
						MDM42							16,5
						MDE21R	316						16,3
						MDE22R							16,3
						MDE41R							18,5

FUNCTION CHART

MODEL	For use with	Valve function	Symbol
MDM21	Single acting	Advance - Return	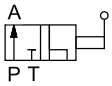
MDM31		Advance - Hold - Return	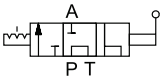
MDM41	Double acting	Advance - Hold - Return	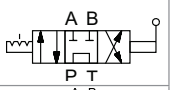
MDM42		Advance - Hold with pilot check - Return	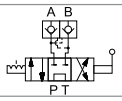
MDE21R	Single acting	Advance - Return	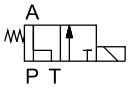
MDE22R		Advance - Hold - Return	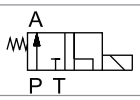
MDE41R	Double acting	Advance - Hold - Return	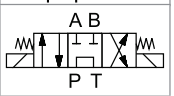

MODEL CODING OF 700 BAR SERIES

MD	M21	R	#	J
Series	Valve type	Remote control	- standard pump **H** High flow pump	Pressure regulation valve

DELIVERY DIAGRAM OF 700 BAR SERIES

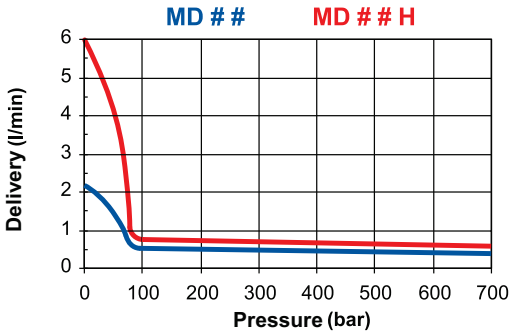

EURO PRESS PACK • Via M. Disma, 87 • 16042 Carasco (GE) ITALY
Tel. 0039 0185 35 271 • Fax 0039 0185 35 11 38

MD

MIDI HYDRAULIC POWER PACKS 1000 - 1500 BAR

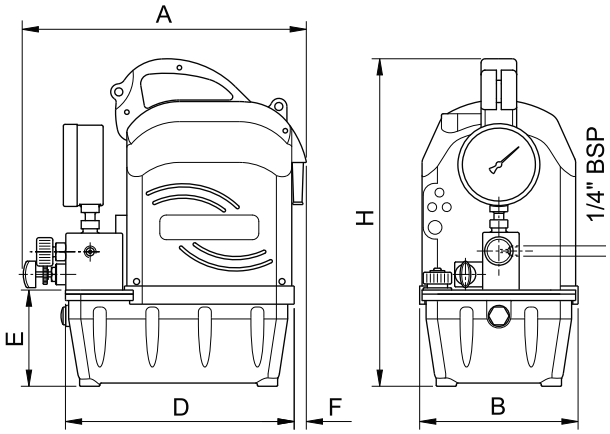

- Reservoir Capacity **2,6 l**
- Delivery at max pressure **0,2 - 0,3 l/min**
- Power Rating **0,75 kW**
- Max Pressure. **1000 - 1500 bar**

SELECTION CHART

Oil Delivery		Pressure Rating		Reservoir Capacity	Usable Oil Volume	MODEL	Dimension mm						Weight
1st Stage	2st Stage	1st Stage	2st Stage										
l/min	l/min	bar	bar	litres	litres		A	B	D	E	F	H	kg
2,3	0,3	65	1000	2,6	2,4	MDM21GJRT	329	197	287	119	15	406	16,5
1,8	0,2		1500			MDM21GJRV	349						19,5

FUNCTION CHART

MODEL	Valve Function	Symbol
MDM21GJRT MDM21GJRV	Advance-Return	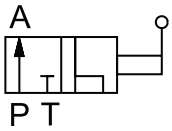

MODEL CODING OF 1000 - 1500 BAR SERIES

MD	M21	G	J	R	V
Series	Valve type	Gauge G16	Pressure regulation valve	Remote control	T= max. w. presure 1000 bar V= max w. presure 1500 bar

DELIVERY DIAGRAM MDM21GJRT

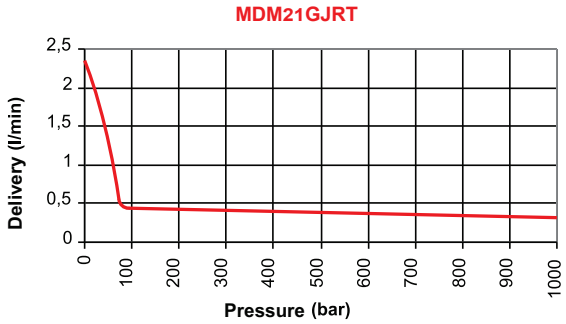

DELIVERY DIAGRAM MDM21GJRV

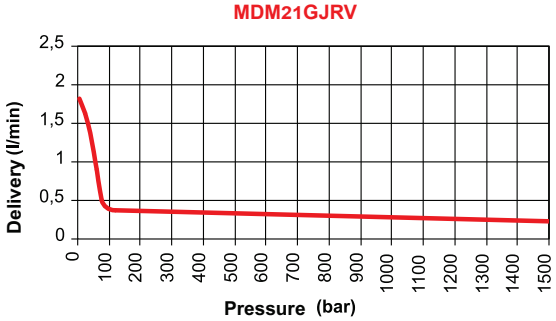

EURO PRESS PACK • Via M. Disma, 87 • 16042 Carasco (GE) ITALY
Tel. 0039 0185 35 271 • Fax 0039 0185 35 11 38

HYDRAULIC POWER PACKS FOR TORQUE WRENCHES 700 BAR

p. 108

Refer to the relevant section for selection of our torque wrenches

p. 88

Flexible hoses: for connection to the torque wrench two hoses are necessary, each of them complete of one male and one female coupler at the two ends **SQ##FM**

FEATURES

Specifically designed for torque wrenches, these power packs combine maximum operating efficiency with compact, lightweight design.
Because of their compact dimensions and weight, they are very portable and supplied with a carry handle or protective frame.

All models are equipped with:
- Coupler ¼ NPT - male on extension side and female on the return, complete with dust caps
- Two-stage piston pump
- Electric or pneumatic 4 ways 2 positions valve
- Pressure regulating valve
- Pressure gauge
- Relief valve
- Plastic tank
- Plastic casing with integrated handle (mod **MDWR**)
- Protection housing (mod. **MDWRH**, **MDWRP** and **MDWRHE**)
- Oil level gauge
- 3 m. remote control
- 5 m. electric cable
- Heat exchanger (mod. **MDWRHE**)

They are available in 4 models:
MDWR with 2,4/0,4 l/min pump and electric single phase 0,75 kW motor
MDWRH with 6/0,6 l/min pump and electric single phase 1,1 kW motor
MDWRP with 6/0,6 l/min pump and air 1,5 kW motor
MDWRHE with 6/0,6 l/min pump and electric single phase 1,1 kW motor and heat exchanger

Power packs with different voltage motors and **4 exits** can be supplied upon request.

APPLICATIONS

Ideal for use with torque wrenches.

DELIVERY DIAGRAM MDWR

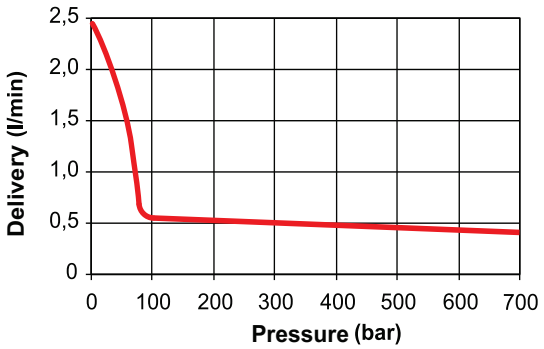

DELIVERY DIAGRAM MDWRH MDWRP MDRRHE

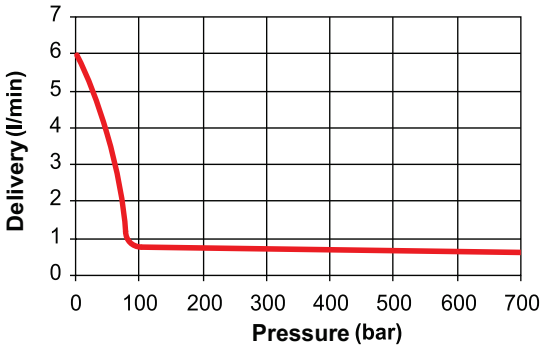

EURO PRESS PACK • Via M. Disma, 87 • 16042 Carasco (GE) ITALY
Tel. 0039 0185 35 271 • Fax 0039 0185 35 11 38

MDW

HYDRAULIC POWER PACKS FOR TORQUE WRENCHES 700 BAR

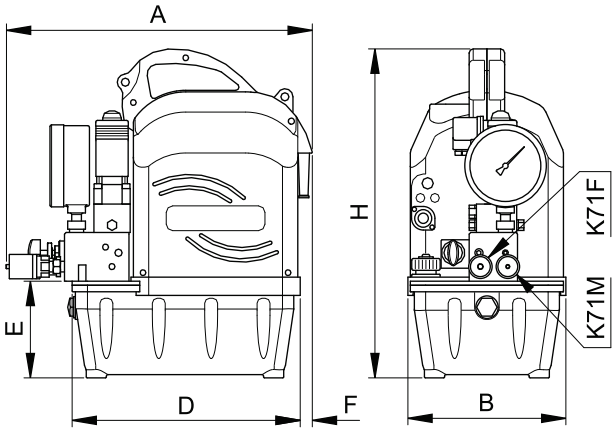

- Reservoir Capacity **2,6 l**
- Delivery at 700 bar **0,4 - 0,6 l/min**
- Power Rating **0,75 - 1,5 kW**
- Air consumption **2130 l/min**
- Max Pressure **700 bar**

OPERATIONAL CHARACTERISTICS

MODEL	Oil Delivery		Pressure		Motor		
	1st Stage	2nd Stage	1st Stage	2nd Stage	Power supply	Power	Speed
	l/min	l/min	bar	bar		kW	rpm
MDWR	2,4	0,4	65	700	230V-50Hz	0,75	2800
MDWRH	6,0	0,6				1,1	
MDWRP					Aria	1,5	
MDWRHE					230V - 50Hz	1,1	

DIMENSIONS

MODEL	Reservoir Capacity	Usable oil Volume	Dimensions mm						Weight
	litres	litres	A	B	D	E	F	H	kg
MDWR	2,6	2,4	381	197	287	119	15	406	18,5
MDWRH			400	250	-	-	-	420	23,8
MDWRP			380	230	-	-	-	390	17,5
MDWRHE			540	285	540	119	-	420	30,3

FUNCTION CHART

MODEL	For use with	Valve function	Symbol
MDWR MDWRH MDWRP MDWRHE	Torque wrenches	Advance - Return	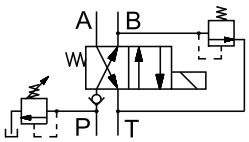

EURO PRESS PACK • Via M. Disma, 87 • 16042 Carasco (GE) ITALY
Tel. 0039 0185 35 271 • Fax 0039 0185 35 11 38

ME - MM - MP - MS

MODULAR HYDRAULIC POWER PACKS 700 BAR

p. 77 **ACCESSORIES**

A large range of **accessories** are available with these power packs

p. 77 **STANDARD**

C Protection Cage for pumps with petrol engine MS

p. 44

Refer to section "how to choose a pump" to determine the correct matching pump/cylinder

FEATURES

These hydraulic power packs are designed to a modular concept to ensure complete interchangeability of components. Using this system it is possible to order customized models.
The top plate is used as a base on which to mount all modular components, valves, and accessories)
The valves are also mounted on a plate to allow for pressure adjustment on the return line.
These power packs are manufactured under strict quality controls to ensure,
Safety: The valves are set at our Factory and each component is in compliance with "2006/42/CE Machine Directive" and its later amendments.
Life: The careful choice of all components ensures excellent performance results, weight/power ratio, together with limited dimensional requirements and easy maintenance.
Environment: They are easy to use, quiet and reliable to guarantee the maximum performance.

The various models consist of:

- **Motor**, available in four versions: three-phase electric, single phase electric, petrol engine and air motor. Furthermore our electric motors are provided with magneto-thermal cut-out with 0 voltage disconnection, complete with 5 m power cord, CEE plug and Class IP54 protection.
- **Pump** available in 12 versions from 0,45 to 10 l/min
- Relief **valve** adjustable from outside on all pumps and various types of manual, electric, air-operated and spring centred valves at your choice (see table on page 75-76)
- **Tank from** 5 to 50 litres
- **Accessories** to customize the power units (page 77).

Refer to the chart on the next page for a correct interpretation of the hydraulic power units.

APPLICATIONS

They are indispensable for lifting and jacking systems with single and double acting cylinders and for all heavy duty or complex operations that cannot be performed with manual pumps.

EURO PRESS PACK • Via M. Disma, 87 • 16042 Carasco (GE) ITALY
Tel. 0039 0185 35 271 • Fax 0039 0185 35 11 38

MODULAR HYDRAULIC POWER PACKS

Euro Press Pack

MODEL COMPOSITION CHART

	Note	Description	Model	Motor Type ME	MM	MP	MS
Pump		Delivery l/min BP/AP 0,9 / 0,45 Axial piston pump	A	•	•	-	-
		" 4,7 / 0,45 Axial piston pump	B	•	•	-	-
		" - / 0,9 Axial piston pump	C	•	•	-	-
		" 1,8 / 0,9 Axial piston pump	D	•	•	•	•
		" 2,4 / 0,9 Axial piston pump	H	•	•	-	-
		" 9,4 / 0,9 Axial piston pump	E	•	•	•	•
		" - / 1,8 Axial piston pump	F	•	-	-	•
		" 4,7 / 1,8 Axial piston pump	G	•	-	-	•
		" - / 1,6 Axial piston pump	L	•	-	-	-
		" 11,6 /1,6 Combined piston/gear pump	K*	•	-	-	-
		" 10 / 1,8 Combined piston/gear pump	T**	•	-	-	-
		" 10 / 2,5 Radial piston pump	V*	•	-	-	-
Reservoir		5 litres	05	•	•	•	-
		10 litres high	10	•	•	•	-
		10 litres low	11	•	•	•	•
		20 litres	20	•	•	•	•
		30 litres * Tank available for **K** and **V pumps** only	30	•	•	•	•
		40 litres	40	•	-	-	-
		50 litres * Tank available for **V pumps** only	50	•	-	-	-
Valve		P and T outlet with by pass	M20	•	•	•	•
		Manual controlled valve 3 way 2 pos.	M21	•	•	•	•
	Versione S Spring centred valve	Manual controlled valve 3 way 3 pos.	M31	•	•	•	•
		Manual controlled valve 3 way 3 pos. with check	M32	•	•	•	•
		Manual controlled valve 4 way 3 pos.	M41	•	•	•	•
		Manual controlled valve 4 way 3 pos. with check	M42	•	•	•	•
		Manual controlled valve 4 way 3 pos. return 150 bar	M51	•	•	•	•
		Manual controlled valve 4 way 3 pos. with check, return 150 bar	M52	•	•	•	•
	Version P air valve	Solenoid valve 3 way 2 pos. normally open	E21	•	•	P •	-
		Solenoid valve 3 way 2 pos. normally closed	E22	•	•	P •	-
		Solenoid valve 3 way 3 pos.	E31	•	•	P •	-
		Solenoid valve 4 way 3 pos.	E41	•	•	P •	-
		Solenoid valve 4 way 3 pos. with check	E42	•	•	P •	-
		Solenoid valve 4 way 3 pos. return 150 bar	E51	•	•	P •	-
		Solenoid valve 4 way 3 pos. with check, return 150 bar	E52	•	•	P •	-
Accessories		Pressure gauge ***	G	•	•	•	•
		Protective housing (standard for air motor type MS)	C	•	•	•	•
		Protective housing with 4 pivoting wheels Ø 80x25 mm	W	•	•	•	•
		Hand activated remote control	R	•	•	•	-
		Pedal activated remote control	F	•	•	•	-
		Pressure sensor and pressure gauge	P	•	•	-	-
		Compressed air lubricator reduction filter	L	-	-	•	-
		Unidirectional flow regulator	U	•	•	•	•
		Unidirectional flow regulator with fine regulation	H	•	•	•	•
		Counterbalance valve	B	•	•	•	•
		Heat exchanger	E	•	•	-	-
		Filter on return line ****	S	•	•	•	•
Customisation		Without hand wheel adjustable max. pressure valve	Z	•	•	•	•
		Without magneto-thermal cut-out	Y	•	•	-	-

* Tank available for V pumps only (50 litres tank) and for K and V pumps only (30 litres tank)
** Pump T available with 20 and 40 litres tanks only
*** Gauge Ø 100 with hand operated valves - Ø 63 with solenoid valves and hand operated valves with pilot check.
Digital gauges upon request.
**** Filter not available for 5 litres and 10 litres tank high.

MODEL CODING

ME	A	05	M21	G
Motor type	Pump type	Reservoir capacity	Valve type	Accessories and customisation

Example: **MPE10P41R** Power pack air motor, pump 9,4/0,9 l/min, tank 10 litres high, air control valve 4 way-3 positions, remote control.

NOTE: for the accessories, fill the letters in alphabetic order.

EURO PRESS PACK • Via M. Disma, 87 • 16042 Carasco (GE) ITALY
Tel. 0039 0185 35 271 • Fax 0039 0185 35 11 38

ME/MM-PP

MODULAR POWER PACKS
FOR GEOTECHNICAL STRUCTURAL TESTS 700 BAR

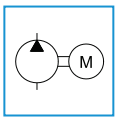

Reservoir capacity	**10 - 40 l**
Delivery at 700 bar	**0,9 l/min**
Power rating	**1,1 - 1,5 kW**
Max pressure	**700 bar**

FEATURES

Many years of experience in the geotechnical field, in particular test piles, have enabled EUROPRESS to develop a complete product with special features answering sector needs.

- **Digital display**, programmed for the desired pressure values
- **Automatic pressure restore** (also in case of structural yieldness)
- **Hysteresis** system cycle **setting**
- **Automatic or manual** control
- Possibility to make test cycles **by decreasing pressure**
- Arranged to be used both with **single than with double acting cylinders**
- External **pressure setting** (50-700 bar range)
- Single or 3-phase electric motor
- Two stage **pump** 2,4/0,9 l7lt/min at 1400 rpm
- Manual 4 way 3 pos **valve** with pilot check
- 10, 20 and 40 litre **tank**
- Protective and transport **cage**
- Analogical **gauge** 100 mm dia.

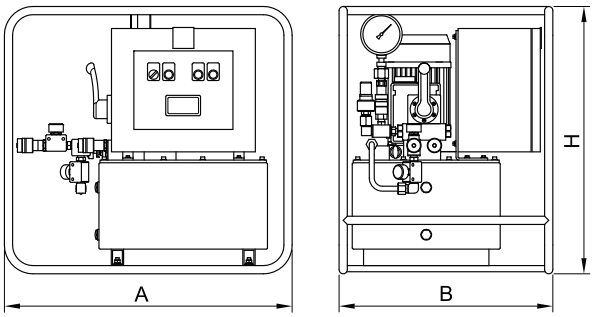

APPLICATION

Non destructive tests on concrete structures, construction material trials and geotechnical experiments both on site and in labs.

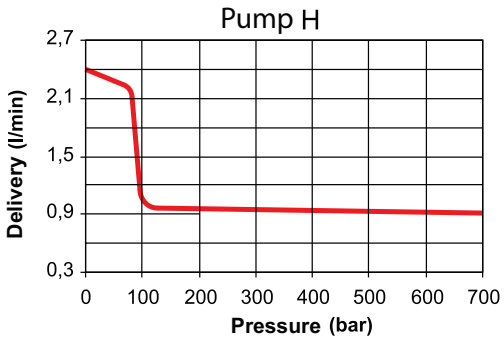

OPERATING CHARACTERISTICS

MODEL	Delivery		Pressure		Motor			Reservoir capacity	Usable oil volume	Dimensions mm		
	1° Stage	2° Stage	1° Stage	2° Stage	Voltage	Power	Speed					
	l/min	l/min	bar	bar		kW	rpm	litres	litres	A	B	H
MEH11M52PP	2,4	0,9	85	700	400V-50Hz	1,1	1400	10	7,7	700	520	522
MEH20M52PP								20	17,7	700	520	650
MEH40M52PP								40	35,8	710	700	650
MMH11M52PP					230V-50Hz	1,5		10	7,7	700	520	522
MMH20M52PP								20	17,7	700	520	650
MMH40M52PP								40	35,8	710	700	650

EURO PRESS PACK • Via M. Disma, 87 • 16042 Carasco (GE) ITALY
Tel. 0039 0185 35 271 • Fax 0039 0185 35 11 38

ME

MODULAR POWER PACKS WITH 3-PHASE ELECTRIC MOTOR 700 BAR

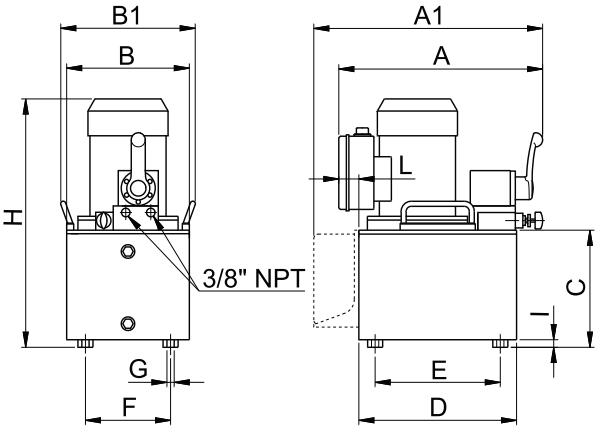

- Reservoir Capacity **5 - 50 l**
- Delivery at 700 bar **0,45 - 2,5 l/min**
- Power rating **0,75 - 3 kW**
- Max pressure **700 bar**

DIMENSIONS

Reservoir capacity	Usable oil volume	Dimensions mm											
litres	litres	A	A1②	B	B1	C	D	E	F	G	H	I	L
5	3,8	370	470	245	270	129	315	250	170	M8	390 ①	10	40
10 high	8,8					227					488 ①		
10 low	7,7	447	-	360	378	129	410	320	270		390 ①		-
20	17,7				-	257				∅9	518 ①	40	
40	35,8	462		600			440	350	510				
MEK 30	22	447		360		343	410	320	270		640		
MEV 30	20					307					634		
MEV 50	32	462		600			440	350	510				

① Add 16 mm for models MEC, **MEH**; add 40 mm for models **MEL**, **MEF**, **MEG**, and **MET**.
② For power packs with **5** l and **10** l high tanks with remote control model **R** or **F** only.

MEK power packs are particularly indicated for intensive use or when a very noiseless product is required.

Operating characteristics

MODEL	Oil delivery		Pressure		Motor		
	1st Stage	2st Stage	1st Stage	2st Stage	Voltage	Power	Speed
	l/min	l/min	bar	bar		kW	rpm
MEA	0,9	0,45	100	700	400V-50Hz (Motors with different voltage upon request)	0,75	1400
MEB	4,7		85				
MEC	-	0,9	-			1,1	
MED	1,8		100				2800
MEH	2,4		85				1400
MEE	9,4						2800
MEL	-	1,6	-			2,2	1400
MEK	11,6		70				
MEF	-	1,8	-				2800
MEG	4,7		85				
MET	10						
MEV		2,5				3	1400

EURO PRESS PACK • Via M. Disma, 87 • 16042 Carasco (GE) ITALY
Tel. 0039 0185 35 271 • Fax 0039 0185 35 11 38

MODULAR POWER PACKS WITH 3-PHASE ELECTRIC MOTOR 700 BAR

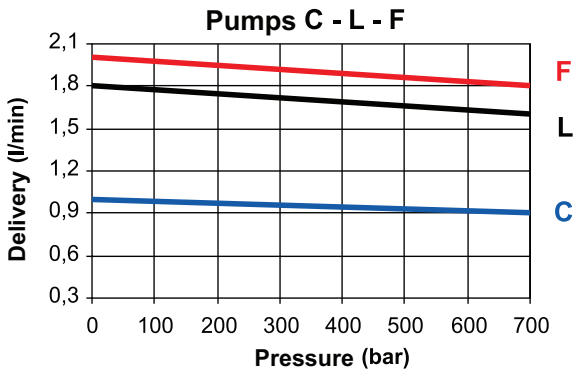

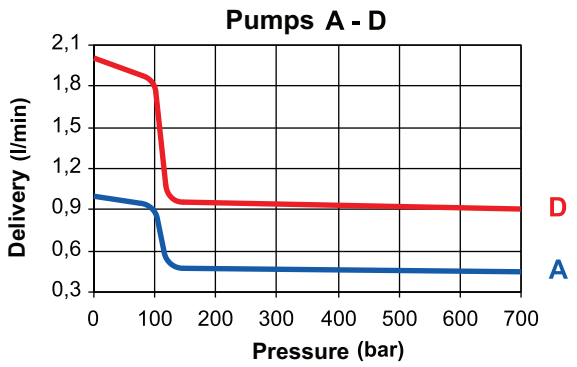

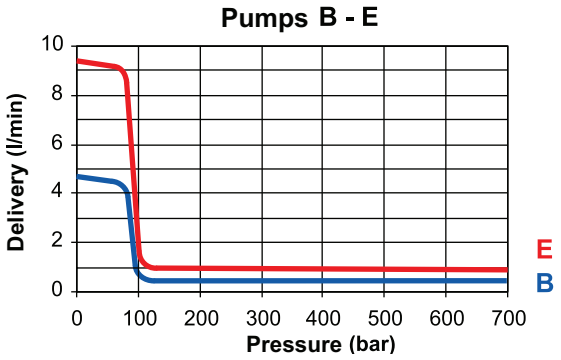

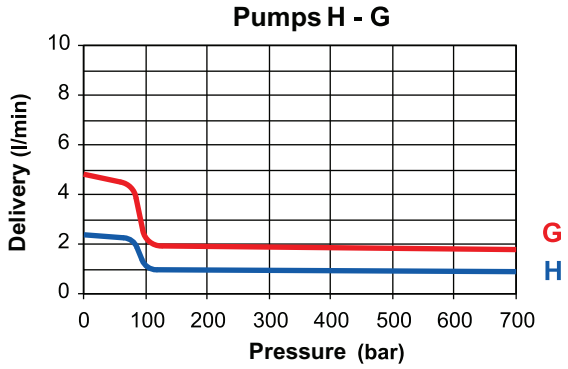

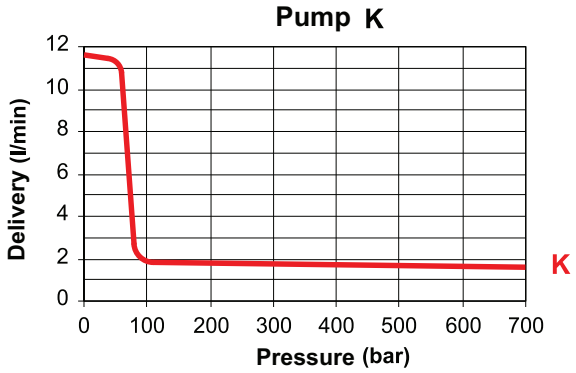

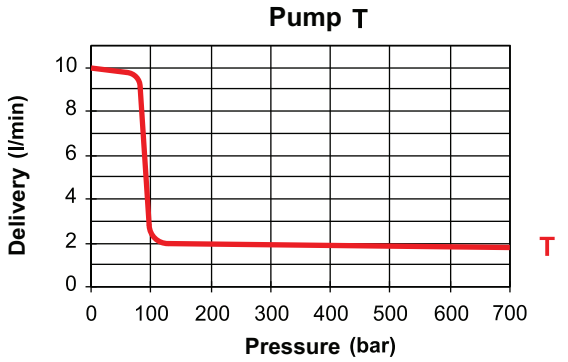

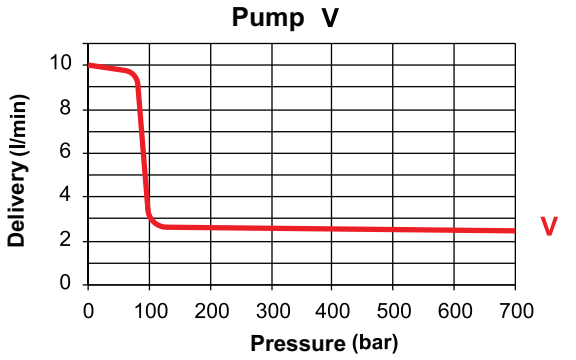

EURO PRESS PACK • Via M. Disma, 87 • 16042 Carasco (GE) ITALY
Tel. 0039 0185 35 271 • Fax 0039 0185 35 11 38

MM

Euro Press Pack

MODULAR POWER PACKS WITH SINGLE PHASE ELECTRIC MOTOR 700 BAR

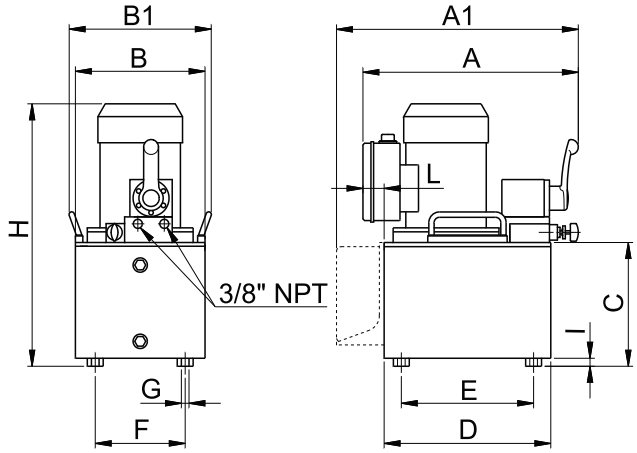

- Reservoir capacity **5 - 40 l**
- Delivery at 700 bar **0,45 - 0,9 l/min**
- Power rating **0,75 - 1,5 kW**
- Max pressure **700 bar**

DIMENSIONS

Reservoir capacity	Usable oil volume	Dimensions mm										
litres	litres	A	A1 ②	B	B1	C	D	E	F	G	H ①	I
5	3,8	370	470	245	270	129	315	250	170	M8	410	10
10 high	8,8					227					508	
10 low	7,7	447	-	360	378	129	410	320	270		410	
20	17,7				-	257				∅9	538	40
40	35,8	462		600			440	350	510			

① Add 48 mm for model **MMC**, **MMH**. ② For power packs with **5** l and **10** l high tanks with remote control model **R** or **F** only.

OPERATING CHARACTERISTICS

MODEL	Oil delivery		Pressure		Motor		
	1st Stage	2st Stage	1st Stage	2st Stage	Voltage	Power	Speed
	l/min	l/min	bar	bar		kW	rpm
MMA	0,9	0,45	100	700	230V-50Hz (Motors with different voltage upon request)	0,75	1400
MMB	4,7		85				
MMC	-	0,9	-			1,5	
MMD	1,8		100				2800
MMH	2,4		85				1400
MME	9,4						2800

DELIVERY DIAGRAM

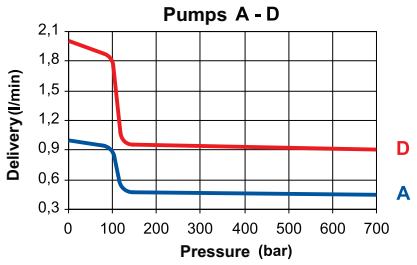

DELIVERY DIAGRAM

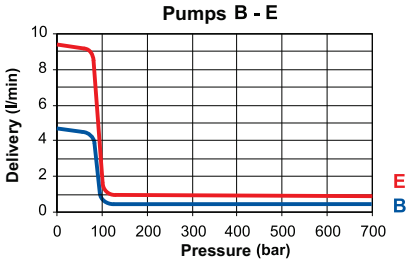

DELIVERY DIAGRAM

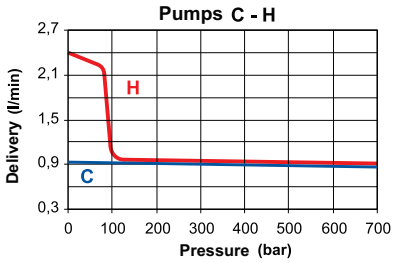

EURO PRESS PACK • Via M. Disma, 87 • 16042 Carasco (GE) ITALY
Tel. 0039 0185 35 271 • Fax 0039 0185 35 11 38

MODULAR POWER PACKS WITH AIR MOTOR 700 BAR

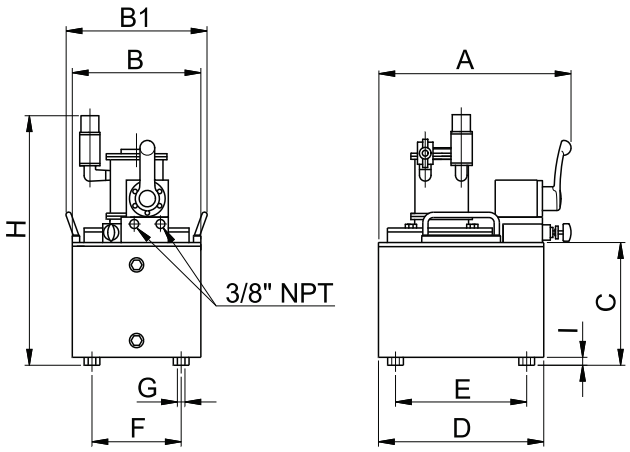

- Reservoir capacity **5 - 40 l**
- Delivery at 700 bar **0,9 l/min**
- Power rating **2,6 kW**
- Max pressure **700 bar**
- Consumption **3400 l/min**

DIMENSIONS

Reservoir capacity	Usable oil volume	Dimensions mm									
litres	litres	A	B	B1	C	D	E	F	G	H	I
5	3,8	370	245	270	129	315	250	170	M8	390	10
10 high	8,8				227					488	
10 low	7,7	447	360	378	129	410	320	270		390	
20	17,7			-	257				∅9	518	40
40	35,8	462	600			440	350	510			

OPERATING CHARACTERISTICS

MODEL	Oil delivery		Pressure		Motor	
	1st Stage	2st Stage	1st Stage	2st Stage	Power	Speed
	l/min	l/min	bar	bar	kW	rpm
MPD	1,8	0,9	100	700	2,6	3000
MPE	9,4		85			

DELIVERY DIAGRAM

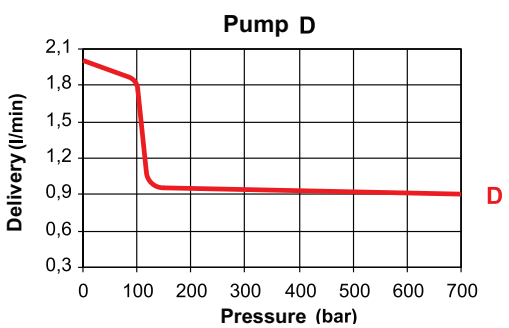

DELIVERY DIAGRAM

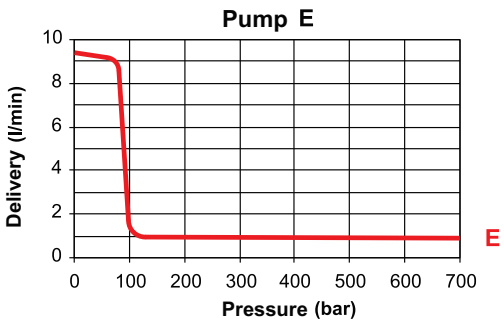

EURO PRESS PACK • Via M. Disma, 87 • 16042 Carasco (GE) ITALY
Tel. 0039 0185 35 271 • Fax 0039 0185 35 11 38

MS

MODULAR POWER PACKS WITH PETROL ENGINE 700 BAR

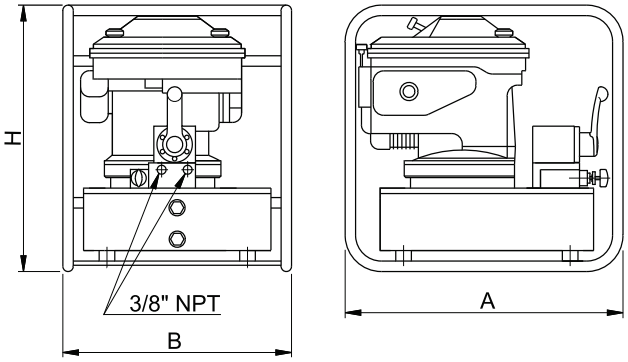

- Reservoir capacity **10 - 40 l**
- Delivery at 700 bar **0,9 - 1,8 l/min**
- Power rating **3,6 kW**
- Max pressure **700 bar**
- Consumption **1,28 l/h with full load**
  0,9 l/h at 75%

DIMENSIONS

Reservoir capacity	Usable oil volume	Dimensions mm		
litres	litres	A	B	H
10 low	7,7	555	440	500
20	17,7			628
40	35,8	510	660	580

Follow our safety instructions, see useful pages **p. 126**

OPERATING CHARACTERISTICS

MODEL	Oil delivery		Pressure		Engine	
	1st Stage	2st Stage	1st Stage	2st Stage	Power	Speed
	l/min	l/min	bar	bar	kW	rpm
MSD	1,8	0,9	100	700	4,4	3000
MSE	9,4		85			
MSF	-	1,8	-			
MSG	4,7		85			

DELIVERY DIAGRAM

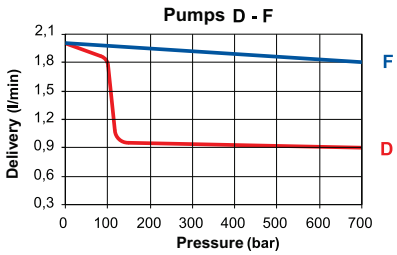

DELIVERY DIAGRAM

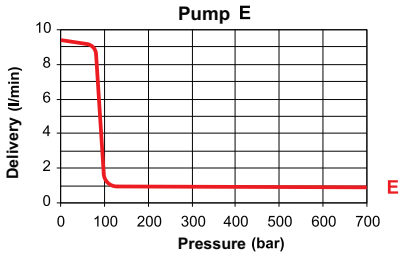

DELIVERY DIAGRAM

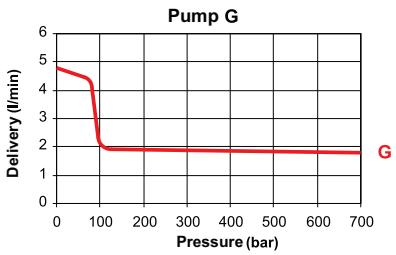

EURO PRESS PACK • Via M. Disma, 87 • 16042 Carasco (GE) ITALY
Tel. 0039 0185 35 271 • Fax 0039 0185 35 11 38

VALVES FOR MODULAR POWER PACKS

TABLE OF MANUAL CONTROLLED VALVE FUNCTIONS

MODEL	For use with	Valve function	Symbol
VMM20	To shift control to in-line valve	Outlet P and T with by pass	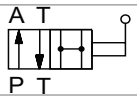
VMM21	SINGLE acting	Advance - return	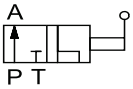
VMM31		Advance - hold - return	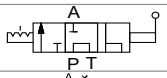
VMM32		Advance - hold with pilot check - return	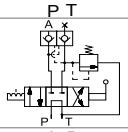
VMM41	DOUBLE acting	Advance - hold - return	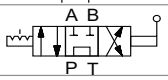
VMM42		Advance - hold with pilot check - return	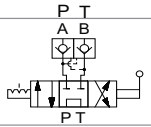
VMM51		Advance - hold - return at 150 bar	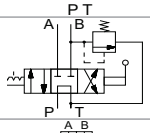
VMM52		Advance - hold with pilot check - return at 150 bar	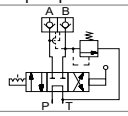

TABLE OF ELECTRIC CONTROLLED VALVE FUNCTIONS (230 VAC VOLTAGE)

MODEL	For use with	Valve function	Symbol
VME21	SINGLE acting	Advance - return	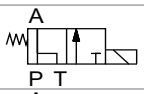
VME22		Advance - hold - return	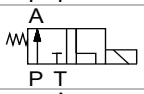
VME31		Advance - hold - return	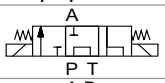
VME41	DOUBLE acting	Advance - hold - return	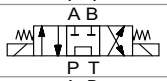
VME42		Advance - hold with pilot check - return	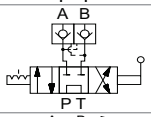
VME51		Advance - hold - return at 150 bar	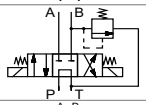
VME52		Advance - hold with pilot check - return at 150 bar	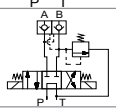

EURO PRESS PACK • Via M. Disma, 87 • 16042 Carasco (GE) ITALY
Tel. 0039 0185 35 271 • Fax 0039 0185 35 11 38

VMS-VMP

VALVES FOR MODULAR POWER PACKS

TABLE OF MANUAL CONTROLLED VALVE FUNCTIONS - SPRING RETURN IN CENTRAL POSITION

MODEL	For use with	Valve function	Symbol
VMS31	SINGLE acting	Advance - hold - return	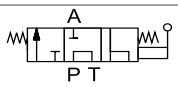
VMS32		Advance - hold with pilot check - return	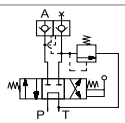
VMS41	DOUBLE acting	Advance - hold - return	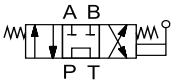
VMS42		Advance - hold with pilot check - return	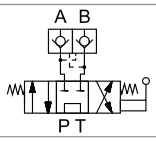
VMS51		Advance - hold - return at 150 bar	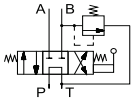
VMS52		Advance - hold with pilot check - return at 150 bar	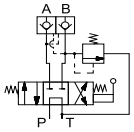

TABLE OF PNEUMATIC CONTROLLED VALVE FUNCTIONS

MODEL	For use with	Valve function	Symbol
VMP21	SINGLE acting	Advance - return	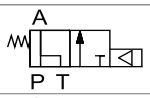
VMP22		Advance - hold - return	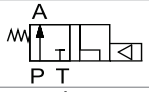
VMP31		Advance - hold - return	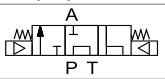
VMP41	DOUBLE acting	Advance - hold - return	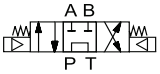
VMP42		Advance - hold with pilot check - return	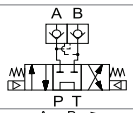
VMP51		Advance - hold - return at 150 bar	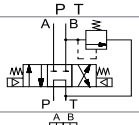
VMP52		Advance - hold with pilot check - return at 150 bar	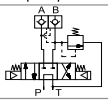

EURO PRESS PACK • Via M. Disma, 87 • 16042 Carasco (GE) ITALY
Tel. 0039 0185 35 271 • Fax 0039 0185 35 11 38

ACCESSORIES

FOR MODULAR POWER PACKS 700 BAR

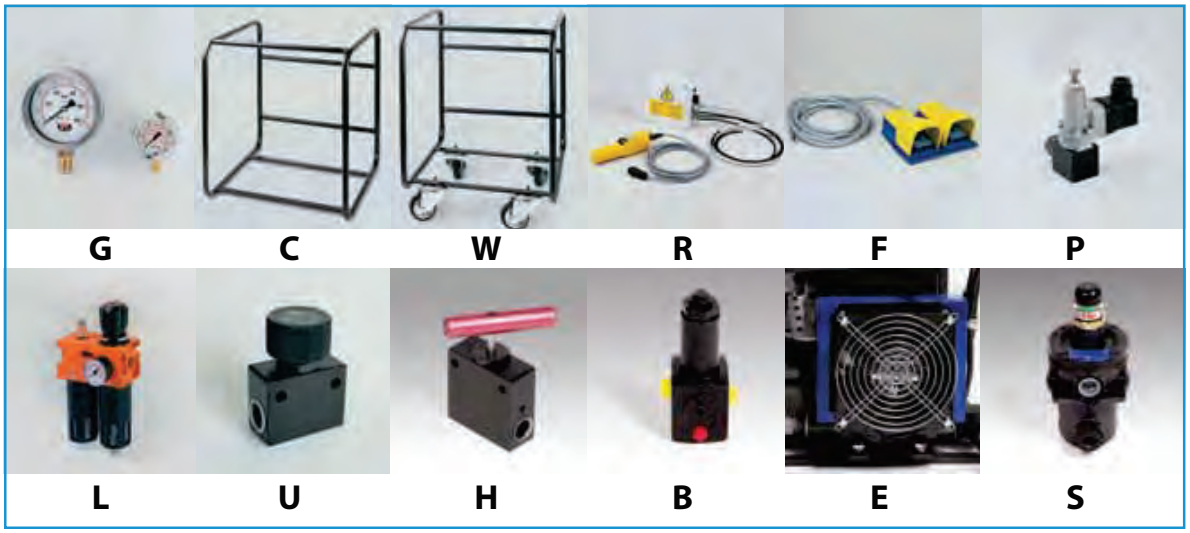

- **G** - Glycerine filled Pressure gauge ∅ 100 with manual valves and ∅ 63 with solenoids and with controlled check manual valves. (digital gauge upon request).
- **C** - Protective housing (standard for MS power packs).
- **W** - Protective housing with 4 pivoting wheels ∅ 80x25 mm
- **R** - Manual activated remote control length 5 metres.
- **F** - Pedal activated remote control length 5 metres.
- **P** - Pressure sensor and pressure gauge.
- **L** - Filter and pressure reducer for models with air motor.
- **U** - Unidirectional flow regulator.
- **H** - Unidirectional flow regulator with fine regulation.
- **B** - Counterbalance valve.
- **E** - Heat exchanger.
- **S** - Filter on return line (not available for power packs with 5 l and 10 l tank high).

CUSTOMIZED VERSIONS

- **Z** - Without hand wheel adjustable max. pressure valve.
- **Y** - Without magneto-thermal cut out for models fitted with electric motor.

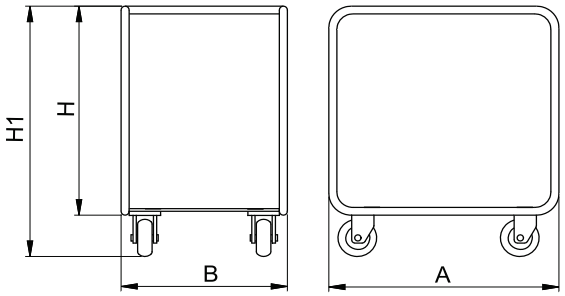

DIMENSIONS OF PROTECTIVE HOUSING

With reservoir	Dimensions mm			
litres	**A**	**B**	**H**	**H1**
5	495	325	500	595
10 high			600	695
10 low	580	440	500	595
20			640	733
40	540	700		
MEK 30 - MEV 30	580	440	690	783
MEV 50	540	700		

EURO PRESS PACK • Via M. Disma, 87 • 16042 Carasco (GE) ITALY
Tel. 0039 0185 35 271 • Fax 0039 0185 35 11 38

SYNCHROLIFT

SYNCHRONOUS LIFTING SYSTEM

Synchronized lifting with Synchrolift for the rebuilding of house foundations. (Germany 2003)

FEATURES

Synchrolift (Synchronous Lifting System) is the most sophisticated method to lift up and lower down any kind of load in a perfectly synchronised way and with the highest degree of precision.

This system splits the oil flow coming out from a hydraulic power pack and directs it towards different lifting points; it controls and monitors the different flows thanks to a range of electric valves controlled by a PLC.

The PLC controls the flow in the direction of a number of cylinders, checking the signals issued by dynamic transducers and activating appropriately the monitoring valves.

This electric system enables the regulation of the movement of the cylinders stopping and/or slowing down those that exceed the difference in allowed movement as chosen by the client. A PC provides for its control system.

Synchrolift is easy to control, multipurpose and extremely accurate, it can handle simultaneously many lifting points, even with different capacity cylinders.

The programme can also deal both with linear and planar non-parallel lifting operations, counteracting with pinpoint precision structural failure (e.g. a bridge pier, one end of which has yielded).

APPLICATIONS

Our Synchrolift system is necessary every time hydraulic cylinders with different loads are required to lift up and lower down at the same rate (e.g. lifting a 3000 t bridge with 1 mm precision, or squaring a building damaged by seismic activity are only two of the many applications of a synchronised lifting system)

Our Technical Department is at your disposal to study the best technical and operational solution, and deliver tailored solutions on demand.

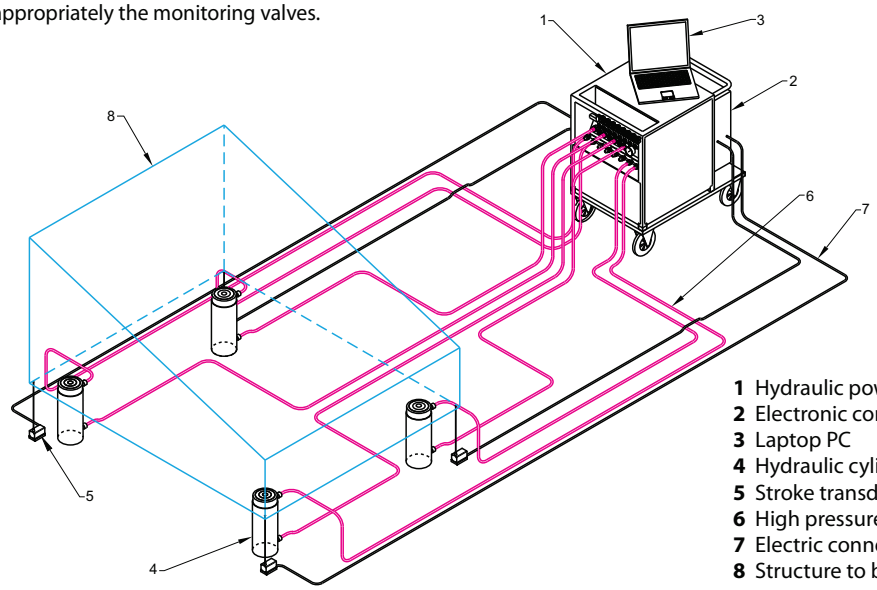

1 Hydraulic power pack
2 Electronic control base
3 Laptop PC
4 Hydraulic cylinders
5 Stroke transducers
6 High pressure Hoses
7 Electric connection cables
8 Structure to be lifted

EURO PRESS PACK • Via M. Disma, 87 • 16042 Carasco (GE) ITALY
Tel. 0039 0185 35 271 • Fax 0039 0185 35 11 38

SYNCHROLIFT

SYNCHRONOUS LIFTING SYSTEM

- Lifting points **4-48**
- Force for each point **100-1000 t**
- Max Pressure **700 bar**
- Max Precision **0,1 mm**

SYNCHROLIFT IS MADE OF

Control system	
SYNCHRO 4 points	electronic control base (4 points) with dedicated PLC + note book with included software (Windows area) to display and control operations and to book data + 4 linear stroke transducers (1 for each lifting point) + group of control valves
SYNCHRO 8 points	electronic control base (8 points) with dedicated PLC + note book with included software (Windows area) to display and control operations and to book data + 8 linear stroke transducers (1 for each lifting point) + group of control valves
Hydraulic Components	
Activation	customised hydraulic power pack
Cylinders	standard hydraulic cylinders and/or as chosen by client
Connections	hoses, fittings and couplers according to your needs

EURO PRESS PACK • Via M. Disma, 87 • 16042 Carasco (GE) ITALY
Tel. 0039 0185 35 271 • Fax 0039 0185 35 11 38

SPLIT FLOW

SYNCHRONOUS LIFTING SYSTEMS

POWER PACKS ME##M52GU

FEATURES

The Split Flow hydraulic power packs have two or four independent outlets delivering a constant amount of oil, even if the pressure in each line is not the same. They are equipped with:

- 3-phase electric motor
- pump and tank to be matched with
- 2 or 4 (one for each port) 4-way, 3-position manual control valves with piloted check and 150 bar pressure setting on return B port
- 2 or 4 flow control valves (one for each port) for controlled load lowering
- 2 or 4 pressure gauges (one for each port)

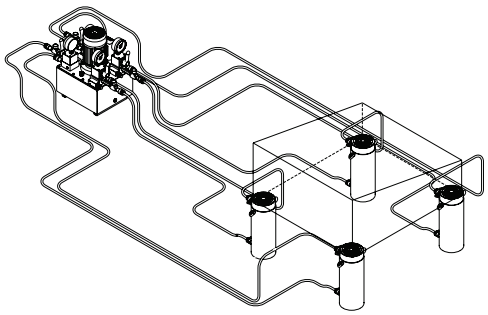

Reservoir capacity	10 - 40 l
Delivery at 700 bar	0,45 - 0,9 l/min
Power Rating	2,2 kW
Max. pressure	700 bar

When the operation requires an automatic control of the down stroke speed without pressure oscillations and load jumping, we suggest the use of the **VRB38** counterbalance valve.

p. 92

APPLICATIONS

They are an efficient and economic solution particularly suitable for lifting up to a maximum of 4 cylinders with different loads. Since they are based on equal geometrical pressure lines, without any external control on the actual stroke, Split Flow power packs provide for ±3% synchronous lifting with visual control of the operation.
Furthermore, they also allow for synchronous load lowering operations under load when using double acting cylinders.

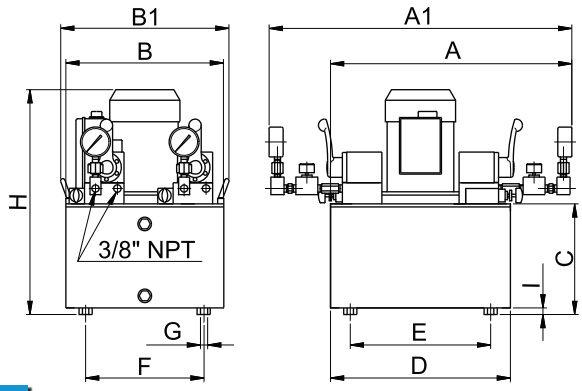

OPERATIONAL CHARACTERISTICS ACCORDING TO THE CHOSEN PUMP

MODEL	Nu. Outlets	Oil delivery		Pressure		Motor		
		1st stage	2st stage	1st stage	2st stage	Voltage	Power	Speed
		l/min	l/min	bar	bar		kW	rpm
MEM	2	-	0,9	-	700	400V-50Hz	2,2	2800
MEN	2	2,2		85				
MEQ	4	-	0,45	-				

OPERATIONAL CHARACTERISTIC ACCORDING TO THE CHOSEN TANK

Reservoir capacity	Usable oil	Dimensions mm										
Litres	Litres	A	A1	B	B1	C	D	E	F	G	H	I
10 low	7,7	555	700	360	378	129	410	320	270	M8	410	10
20	17,7				-	257				∅9	518	40
40	35,8	570		600			440	350	510			

MODEL CODING

ME	#	#	M52	G	U
Motor Type	Pump type	Reservoir capacity	Valve type	Pressure Gauge	Unidirectional flow regulator

EURO PRESS PACK • Via M. Disma, 87 • 16042 Carasco (GE) ITALY
Tel. 0039 0185 35 271 • Fax 0039 0185 35 11 38

VALVES AND ACCESSORIES

VALVES AND ACCESSORIES FOR HYDRAULIC SYSTEMS:

Pressure Gauges and Gauge Blocks

G ..... p. **82**

Couplers

K ..... p. **83**

Manifolds and Fittings

R ..... p. **85**

Hoses

S ..... p. **88**

In-line Valves Reduction Valves and Regulators

VL - VR ..... p. **89**

Hydraulic oil

ZOH ..... p. **94**

EURO PRESS PACK • Via M. Disma, 87 • 16042 Carasco (GE) ITALY
Tel. 0039 0185 35 271 • Fax 0039 0185 35 11 38

Euro Press Pack

PRESSURE GAUGES AND GAUGE BLOCKS 700 - 1000 - 3000 - 4000 BAR

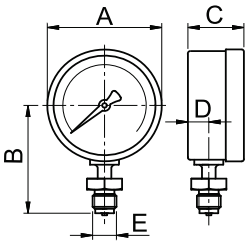

- Max Working pressure **700 - 4000 bar**
- Dial diameter **63 - 100 mm**
- Accuracy of full scale **1% - 1,6%**
- Scale **bar - bar/kN**

SELECTION CHART FOR DOUBLE SCALE GAUGES

MODEL	Scale bar	Scale kN	For cylinders	Dimensions
G10F1020	700	0-121 / 0-225	CMF 10/20 ton	See G10 chart
G10F3060		0-327 / 0-578	CMF/COF 30/60 ton	
G10S1020		0-109 / 0-194	CGS/CMC/CMI/CMP/COI 10 ton CGS/CMC/CMP 20 ton	
G10S2530		0-228 / 0-303	CMI 25 ton - CGG/CGS/CMC/ CMI/CMP/COI 30 ton	
G10S50100		0-486 / 0-911	CGG/CGS/CMC/CMI/CML/ CMP/COI/COS 50/100 ton	

FEATURES

Pressure Gauges
Available with 63 or 100 mm dial with read-out in bar and PSI. The 1000 bar gauges are glycerine filled while the 1600, 3000, 4000 bar are dry.
The G106L pressure gauge has a 1/4" NPT screwed connection at 3 o'clock for direct installation on the left side of the pump head.
The model G10 exists also in the double scale version, bar and kN, to be used up to 700 bar, different for cylinders with hollow piston (G10F##) and for cylinders with normal piston (G10S##).

Gauge blocks
Manufactured in steel and available in four versions to suit the gauge diameter and distance from the equipment.

PRESSURE GAUGE SELECTION CHART: 700 – 1000 BAR

Max Working Pressure	Full scale	Dial diameter	Precision class DIN16005	Scale indexing	Thread	MODEL	Dimensions mm				Weight
bar	bar	mm	%	bar	E		A	B	C	D	kg
700	1000	63	1,6	50	1/4" NPT	G106L G106	68	54	32	13	0,2
1000	1000	100	1,0	20	1/2" BSP Swivel	G10	101	98	49	15,5	0,8

PRESSURE GAUGE SELECTION CHART: 1600 – 3000 – 4000 BAR

Max Working Pressure	Full scale	Dial diameter	Pressure Class DIN16005	Scale indexing	Thread	MODEL	Dimensions mm				Weight
bar	bar	mm	%	bar	E		A	B	C	D	kg
1600	1600	100	1,0	50	1/2" BSP *	G16	101	98	49	15,5	0,6
3000	3000				1/2" BSP **	G30					
4000	4000			100	M16x1,5 Female	G40		77	60	24,5	

* Swivelling ** Fixed

Digital gauges can be supplied on request.

SELECTION CHART FOR 1000 BAR GAUGE BLOCKS TO BE MOUNTED IN-LINE

MODEL	Max working pressure	Gauge connection	In/out connection	A Dimension	Weight
	bar			mm	kg
RP52	1000	1/4" NPT	3/8" NPT	100	0,40
RP50		1/2" BSP		60	0,28
RP501				90	0,33
RP502				140	0,42

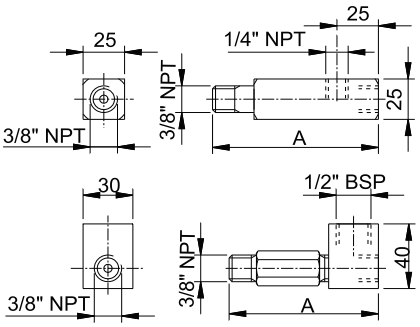

Adapters range for gauges 1000, 1600, 3000 bar p. 51

EURO PRESS PACK • Via M. Disma, 87 • 16042 Carasco (GE) ITALY
Tel. 0039 0185 35 271 • Fax 0039 0185 35 11 38

QUICK COUPLERS 700 BAR

- Max Working pressure **700 bar**
- Thread **1/4" - 3/8" NPT**

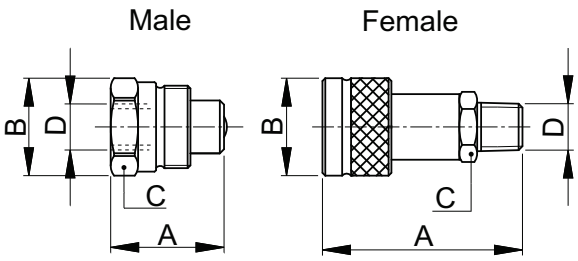

FEATURES

Quick Release couplers are available in **screwed and flat face** versions and are compatible with the EPP product range and also interchangeable with most couplings used on high pressure hydraulic equipment.

Flat face snap couplers are advantageous because they are

- Anti-drip with negligible air or fluid inclusion during coupling, and uncoupling operations
- Easy to clean
- Rotary motion which prevents hose twisting
- Safe coupling system, (two voluntary movements are necessary for uncoupling)

Couplers with Viton seals are available on request.

When using **screw couplings**, the nut of the female part must always be fully tightened on the male part.
If the two parts are not fully connected the oil can not pass through the coupler, and damage or injury can occur.

SELECTION CHART FOR QUICK COUPLERS: 700 BAR

Working pressure	Coupling type	Thread type	Coupler type	MODEL	Dimensions mm			Weight
bar		D			A	B	C	g
700	Screw	1/4" NPT	**Complete** (K71M+K71F+K71C+K71D)	**K71**	-	-	-	-
			Male with female thread	**K71M**	39	30	19	75
			Female with male thread	**K71F**	60,5	30	22	140
			Female with female thread	**K71X**	58	30	22	150
			Cap for female	**K71C**	-	-	-	-
			Cap for male	**K71D**	-	-	-	-
		3/8" NPT	**Complete** (K73M+K73F+K73C+K73D)	**K73**	-	-	-	-
			Male with female thread	**K73M**	40,5	36	32	120
			Female with male thread	**K73F**	72	35,5	24	200
			Female with female thread	**K73X**	76	35,5	24	210
			Cap for female	**K73C**	-	-	-	-
			Cap for male	**K73D**	-	-	-	-
	Flat Face	1/4" NPT	**Complete** (KP71M+KP71X)	**KP71**	-	-	-	-
			Male with female thread	**KP71M**	48	24	22	90
			Female with female thread	**KP71X**	58	29	22	210
		3/8" NPT	**Completo** (KP73M+KP73X)	**KP73**	-	-	-	-
			Male with female thread	**KP73M**	55	26	24	100
			Female with female thread	**KP73X**	60	29	24	220

EURO PRESS PACK • Via M. Disma, 87 • 16042 Carasco (GE) ITALY
Tel. 0039 0185 35 271 • Fax 0039 0185 35 11 38

Euro Press Pack

QUICK RELEASE COUPLINGS 1000 - 1500 - 2000 BAR

Max Working Pressure **1000 - 2000 bar**

Thread **1/4"- 3/8"NPT 1/4"BSP**

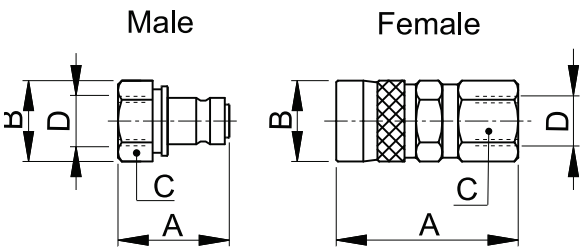

FEATURES

These couplings are compatible with the whole EPP product range and high pressure accessories.
They are available in the quick release coupling version to ensure easy and fast coupling and have dust protection cap.

Follow our safety instructions.
See useful pages. p. 126

SELECTION CHART FOR QUICK COUPLERS 1000 - 1500 - 2000 BAR

Working pressure	Coupling type	Thread type	Coupler type	MODEL	Dimensions mm			Weight
bar		D			A	B	C	g
1000	Quick Release	1/4" NPT	**Complete** (K11M+K11X)	**K11**	-	-	-	-
			Male with female thread	**K11M**	36	25	22	60
			Female with female thread	**K11X**	58,5	27,5	24	150
		3/8" NPT	**Complete** (K13M+K13X)	**K13**	-	-	-	-
			Male with female thread	**K13M**	37	27	24	70
			Female with female thread	**K13X**	60,5	27,5	24	175
1500		1/4" BSP	**Complete** (K15M+K15X)	**K15**	-	-	-	-
			Male with female thread	**K15M**	37	25	22	65
			Female with female thread	**K15X**	58,5	27,5	24	150
2000			**Complete** (K20M+K20X)	**K20**	-	-	-	-
			Male with female thread	**K20M**	38	25	22	65
			Female with female thread	**K20X**	67	30	24	210

EURO PRESS PACK • Via M. Disma, 87 • 16042 Carasco (GE) ITALY
Tel. 0039 0185 35 271 • Fax 0039 0185 35 11 38

MANIFOLDS - FITTINGS 1000 - 2000 - 3000 BAR

- Max working pressure **1000 bar**
- Applications **3 - 9**

FEATURES

Manifolds

- of various sizes with axial or radial outlets, these manifolds are threaded **1/4" NPT** to accept **G106** pressure gauge.

Fittings

- The fittings range at 1000 bar guarantees a safety factor 4 if used at 700 bar w.p., and a safety factor 2,8 if used at 1000 bar w.p.

MANIFOLDS

Type	MODEL		Nu. applications	A mm	B mm
Multi level Manifold	RB386	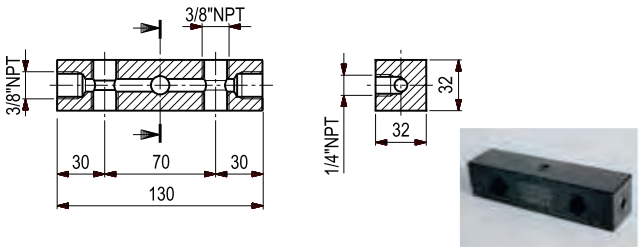	6	-	-
Single level Manifold	RM387	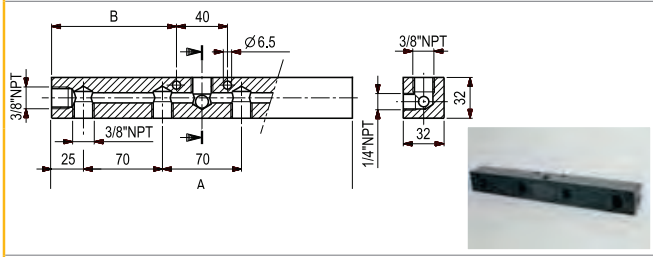	7	260	110
	RM389		9	400	180
Radial manifold	RK383	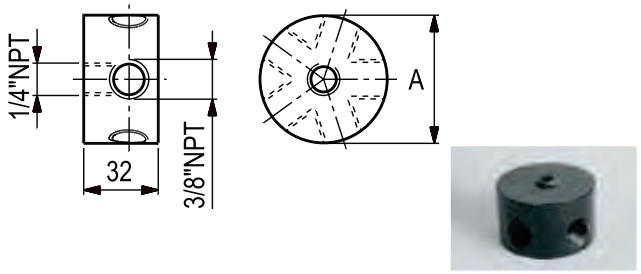	3	45	-
	RK385		5	55	-
	RK387		7	65	-

EURO PRESS PACK • Via M. Disma, 87 • 16042 Carasco (GE) ITALY
Tel. 0039 0185 35 271 • Fax 0039 0185 35 11 38

FITTINGS

Max working pressure **1000 bar**

FITTINGS

Type	MODEL			Dimensions A	Dimensions B	Dimensions C	Dimensions D
Plug	RC14	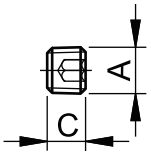		1/4" NPT	-	10.5	-
	RC38			3/8" NPT			
Coupling	RS14	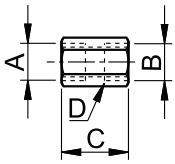		1/4" NPT	1/4" NPT	32	19
	RS38			3/8" NPT	3/8" NPT	34	24
	RS52			1/4" NPT			
Nipple	RN14	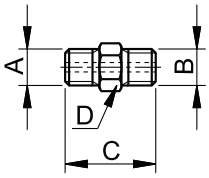		1/4" NPT	1/4" NPT	39	17
	RN38			3/8" NPT	3/8" NPT	41	
	RN381					70	
	RN382					120	
	RN52				1/4" NPT	41	
Reducing connector	RR23	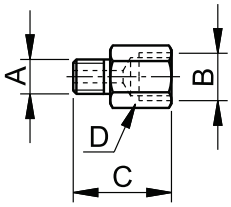		1/4" BSP 120°	3/8" NPT	41	24
	RR24			1/4" NPT		40	
	RR52			3/8" NPT	1/4" NPT	40	19
	RR02			1/2" BSP			22
	RR26			1/4" NPT	1/2" BSP		30
	RR501			3/8" NPT			
Elbow	RE14	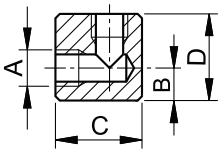		1/4" NPT	15	35	35
	RE38			3/8" NPT	15	40	40
Tee	RT14	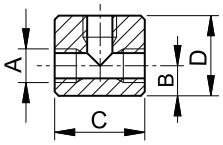		1/4" NPT	12,5	40	35
	RT38			3/8" NPT	15	45	40
Cross	RX14	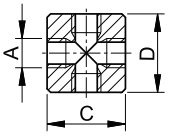		1/4" NPT	-	45	45
	RX38			3/8" NPT	-		

EURO PRESS PACK • Via M. Disma, 87 • 16042 Carasco (GE) ITALY
Tel. 0039 0185 35 271 • Fax 0039 0185 35 11 38

FITTINGS

Max working pressure **2000 - 3000 bar**

FITTINGS

Type	Press. bar	MODEL		Dimensions A	Dimensions B	Dimensions C	Dimensions D
Plug	2000	RC15	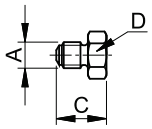	1/4" BSP 120°	-	28	22
	3000	RC34		3/4"-16 UNF 60°	-	32	
Coupling	2000	RS15	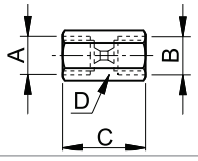	1/4" BSP 120°	1/4" BSP 120°	40	19
	3000	RS34		3/4"-16 UNF 60°	3/4"-16 UNF 60°	42	27
Nipple	2000	RN15	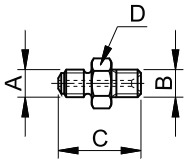	1/4" BSP 120°	1/4" BSP 120°	46	22
		RN29			1/4" NPT	43	
		RN53			3/8" NPT	45	
		RN17		1/4" BSP **	1/4" BSP **	34	
		RN31			1/4" NPT	37	
		RN55			3/8" NPT	39	
	3000	RN32	Internal cone 60°	1/4" BSP 120°	1/4" BSP **	40	22
		RN33		M16x1,5 60°	1/4" BSP **	39	
		RN28			1/2" BSP	44	
		RN34		3/4"-16 UNF 60°	3/4"-16 UNF 60°	54	
		RN34 O*			3/4"-16 UNF 60°	63	
		RN49			1/4" BSP 120°	50	
		RN51			1/4" BSP **	44	
		RN50			M16x1,5 60°	50	
Reducing connector	2000	RR49	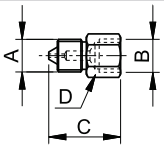	3/4"-16 UNF 60°	1/4" BSP 120°	42	22
	3000	RR51 O*		3/8" BSP 60°	1/2" BSP	53	27
Elbow	2000	RE15	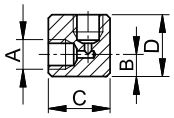	1/4" BSP 120°	12,5	35	35
	3000	RE34		3/4"-16 UNF 60°	12,5	40	40
Tee	2000	RT15	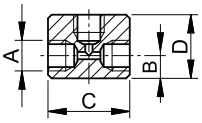	1/4" BSP 120°	12,5	45	35
	3000	RT34		3/4"-16 UNF 60°	15	45	45
Cross	2000	RX15	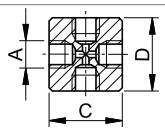	1/4" BSP 120°	-	45	45
	3000	RX34		3/4"-16 UNF 60°	-	55	55

** Specifically for flexible hoses

* Swivelling

VALVES AND ACCESSORIES

EURO PRESS PACK • Via M. Disma, 87 • 16042 Carasco (GE) ITALY
Tel. 0039 0185 35 271 • Fax 0039 0185 35 11 38

Euro Press Pack

HIGH PRESSURE HOSES 700 - 1000 - 1800 - 2500 BAR

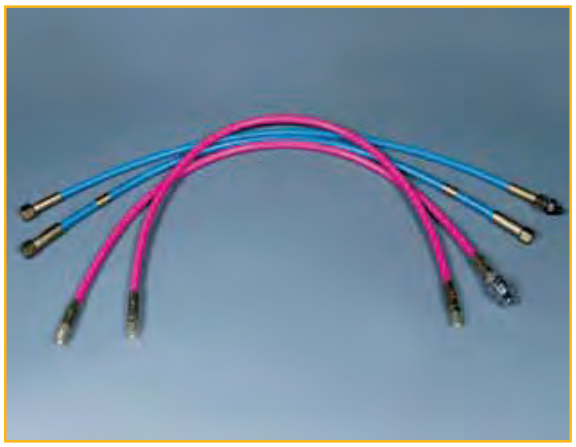

Max Pressure **700 - 2500 bar**

Internal Diameter **4,8 - 6,5 mm**

FEATURES

These hoses are suitable for all hydraulic applications and consist of 2, 4, or 6 steel wire spirals depending on the operating pressure. They have an extremely high tensile strength.
Their outer cover in polyurethane (700 bar) or polyamide (1800 and 2500 bar) provides excellent abrasion protection, whereas minimal expansion during operation guarantees excellent efficiency.

SELECTION CHART FOR 700 - 1000 BAR HOSES

MODEL	Max. working pressure	Fitting thread	Length	Coupling	Nipple	Min. burst pressure	Safety factor @700 bar	Safety factor @1000 bar	Internal diameter	Minimum bending radius	Oil volume	Weight
	bar					bar			mm	mm	cm³/m	kg/m
SN10	1000	3/8"NPT - 3/8"NPT male	10 = 1 m 20 = 1,8 m 30 = 3 m etc.	-	-	2800	4	2,8	6,4	70	32,2	0,32
SN10M	700			K73M								
SN10HT	700 @ 120°C	3/8"NPT - 3/8"NPT male		-						40		0,25
SQ10	1000	1/4"NPT - 1/4"NPT male		-						70		0,32
SQ10M	700			K71M								
SR10	1000	1/4"BSP - 1/4"BSP Swivel female		-								

- Bolt tensioners hoses: **SN#FT** (with K13X coupler).
- Torque wrenches hoses : **SQ##FM** (male coupler on one side and female on the other).

The oil volume required to fill the hoses needs to be taken into account when selecting the pump model.

The maximum operating pressure of the pump-hose-coupling system is the working pressure of the lowest rated part.

SELECTION CHART FOR 1800 - 2500 BAR HOSES

MODEL	Max. working pressure	Fitting thread	Length	Coupling	Nipple	Min. burst pressure	Safety Factor	Internal diameter	Minimum bending radius	Oil volume	Weight
	bar					bar		mm	mm	cm³/m	kg/m
SM10	1800	1/4"BSP - 1/4"BSP Swivel female	10 = 1 m 20 = 2 m 30 = 3 m etc.	-	-	4500	2,5	4,8	130	17,8	0,28
SM10P					RN32						
SH10	2500				-	6250			175		0,41
SH10P					RN51						

EURO PRESS PACK • Via M. Disma, 87 • 16042 Carasco (GE) ITALY
Tel. 0039 0185 35 271 • Fax 0039 0185 35 11 38

IN-LINE VALVES - REGULATING VALVES

700 - 1000 - 2000 - 3000 BAR

Pressure **700 - 3000 bar**

FEATURES

These valves provide the means to control cylinders and actuators operating at pressures of 700, 1000, 2000 and 3000 Bar.

Specifications.

- **VL** Manual and electric control valves to operate single acting (3-way) and double acting (4 way) systems
- **VR** Regulating, shut-off and check valves to isolate and monitor hydraulic systems

Control voltage for solenoids is 230 VAC
Different voltages are available on request.

When using **closed centre** valves the pump must be **switched off** when the valve lever is in the central position to prevent overheating of the oil.

For installation of the valves in modular units, refer to the relevant section.

p. 75-76

HOW TO SELECT A VALVE

Please consider the following information when choosing a valve.

- **Single acting cylinders:** these require a **3-way** valve (three outlets: pressure P, tank T, cylinder A)
- **Double acting cylinders:** these require a **4-way** valve (4 outlets, pressure P, tank T, extension A, return B)
- **Positions:** these are the valve lever position points: extension and retraction of the cylinder (**2 position** valve) extension, holding and return (**3 position** valve)
- **Centre:** Intermediate position. The centre may be **open** and in this case the valve connects the pump (P) and users (A,B) to the discharge outlet (T), or closed and then all outlets are **closed** (if you want to isolate the cylinder but use the pump to feed other users)

Follow our safety instructions
see useful pages p. 126

For installation of the valves on hand pumps PL, refer to the relevant section.

p. 51

EURO PRESS PACK • Via M. Disma, 87 • 16042 Carasco (GE) ITALY
Tel. 0039 0185 35 271 • Fax 0039 0185 35 11 38

VLM - IN-LINE MANUAL VALVES

VLM PRESSURE 700 BAR

MODEL	Description		Symbol
VLM31	3-way, 3-position Manual Control Valve. • Advance • Hold • Return	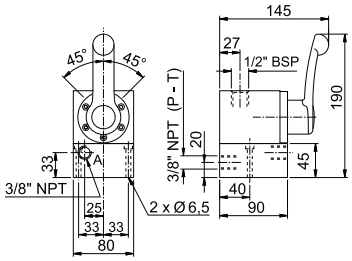	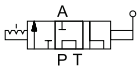
VLM32	3-way, 3-position Manual Control Valve Pilot operated Check Valve. • Advance • Hold with Pilot Check • Return	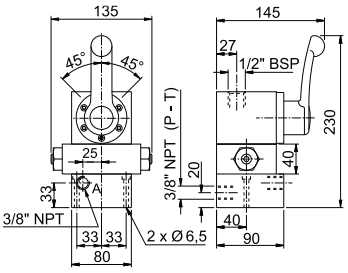	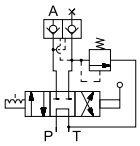
VLM35	3-way, 3-position Manual Control Valve Pilot operated Check Valve P closed. • Advance • Hold with Pilot Check • Return		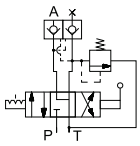
VLM36	3-way, 3-position Manual Control Valve Closed Centre. • Advance • Hold • Return	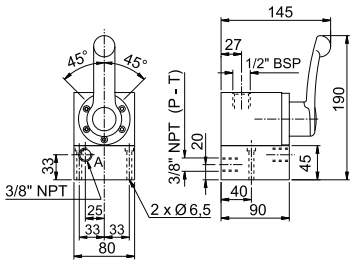	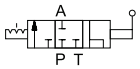
VLM41	4-way, 3-position Manual Control Valve. • Advance • Hold • Return	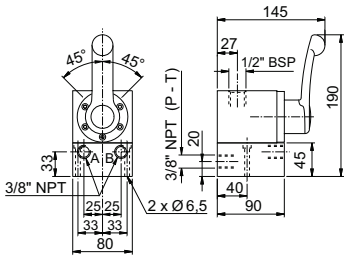	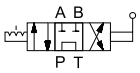

EURO PRESS PACK • Via M. Disma, 87 • 16042 Carasco (GE) ITALY
Tel. 0039 0185 35 271 • Fax 0039 0185 35 11 38

VLM - IN-LINE MANUAL VALVES

VLS - IN-LINE MANUAL VALVES SPRING RETURN IN CENTRAL POSITION

VLM PRESSURE 700 BAR

MODEL	Description		Symbol
VLM42	4-way, 3-position Manual Control Valve Pilot operated Check. • Advance • Hold with Pilot Check • Return	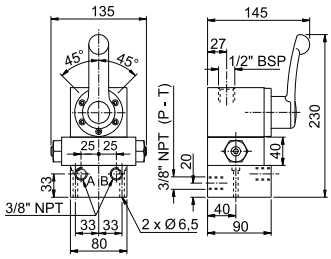	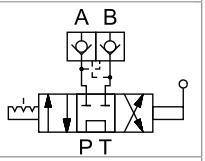
VLM45	4-way, 3-position Manual Control Valve Pilot operated Check Valve P closed. • Advance • Hold with Pilot Check • Return		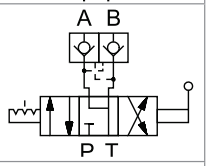
VLM46	4-way, 3-position Manual Control Valve Closed Centre. • Advance • Hold • Return	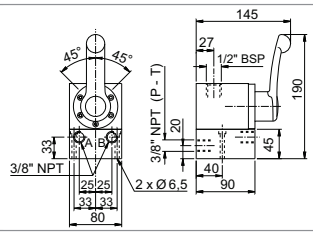	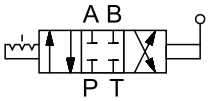

VLS PRESSURE 700 BAR

MODEL	Description		Symbol
VLS31	3-way, 3-position Manual Control Valve. • Advance • Hold • Spring return in central position	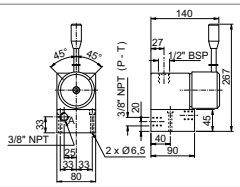	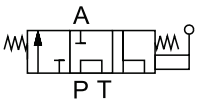
VLS32	3-way, 3-position Manual Control Valve with Pilot operated Check Valve. • Advance • Hold with pilot check • Spring return in central position	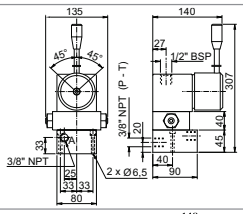 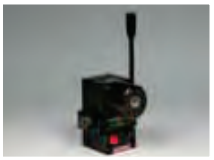	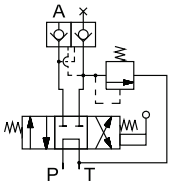
VLS41	4-way, 3-position Manual Control Valve. • Advance • Hold • Spring return in central position	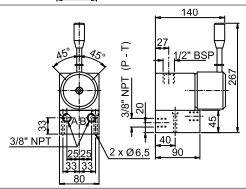	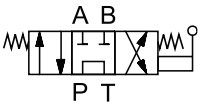
VLS42	4-way, 3-position Manual Control Valve with Pilot operated Check Valve. • Advance • Hold with pilot check • Spring return in central position	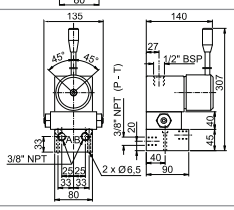 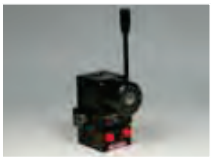	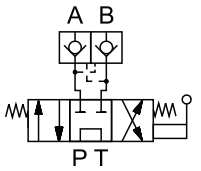

EURO PRESS PACK • Via M. Disma, 87 • 16042 Carasco (GE) ITALY
Tel. 0039 0185 35 271 • Fax 0039 0185 35 11 38

VLE-VR

VLE - IN-LINE ELECTRIC VALVES

VR - IN-LINE REGULATING VALVES

VLE PRESSURE 700 BAR

MODEL	Description		Symbol
VLE31	3-way, 3-position Electric Control Valve. • Advance • Hold • Return	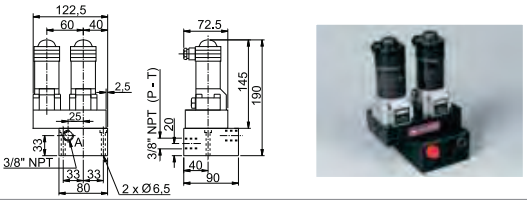	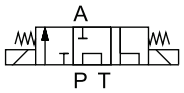
VLE41	4-way, 3-position Electric Control Valve. • Advance • Hold • Return	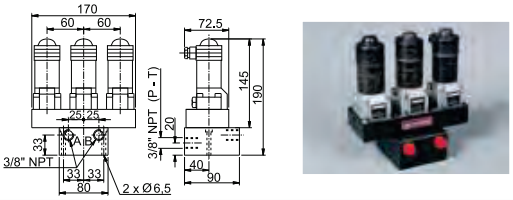	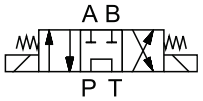
VLE42	4-way, 3-position Electric Control Valve with Pilot operated Check. • Advance • Hold with pilot check • Return	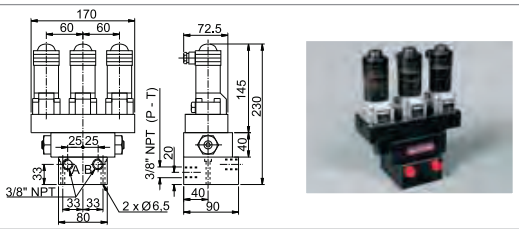	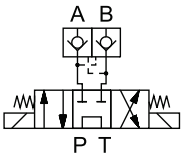

VR PRESSURE 700 BAR

MODEL	Description		Symbol
VRB38	Counterbalance valve. It allows the positive hold of the load; calibrated during assembling, it controls automatically the down stroke speed without pressure oscillations and load jumping. Only for double acting cylinders.	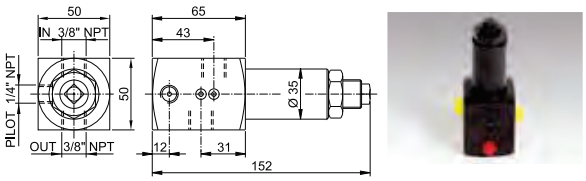	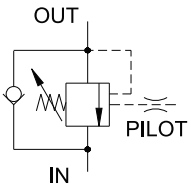
VRM14	Pressure relief valve limiting the circuit pressure to the maximum required value (ranging between 50 and 700 bar). Adjusted by the valve control wheel. Suitable to be mounted on a panel.	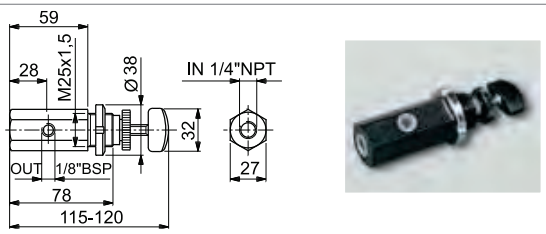	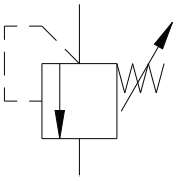
VRM381	Pressure relief valve limiting the circuit pressure to the maximum required value (ranging between 50 and 700 bar). Adjusted by the valve control wheel. Suitable to be mounted in line.	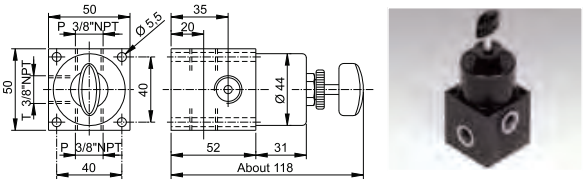	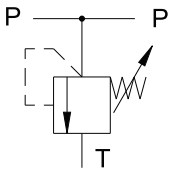

EURO PRESS PACK • Via M. Disma, 87 • 16042 Carasco (GE) ITALY
Tel. 0039 0185 35 271 • Fax 0039 0185 35 11 38

VR - IN-LINE REGULATING VALVES

VR PRESSURE 700 BAR

MODEL	Description		Symbol
VRP38	Pilot operated check valve. To permit free flow in one way and shut off the flow in the opposite direction. Pilot ratio 1.4	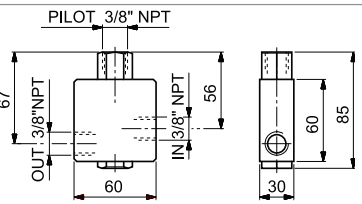	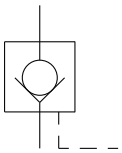
VRR38	One-way check valve. To shut off the oil flow in one direction ΔP= 1 bar	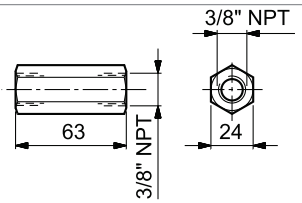	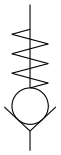

VR PRESSURE 1000 BAR

MODEL	Description		Symbol
VRF38	Needle valve. To shut off the flow.	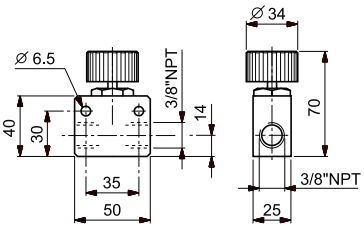	
VRU38	One-way flow control valve. It permits controlled load lowering.		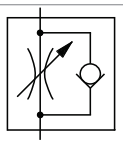
VRH38	One-way flow control valve with fine regulation. It permits controlled load lowering.	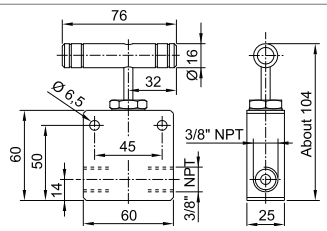	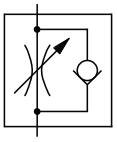
VRF382	Double outlet needle valve. To split the flow in two separate ways. A= 90	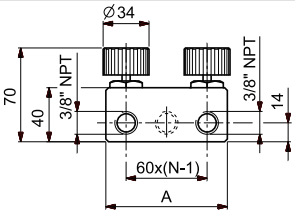	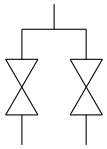
VRF384	Needle valve with four outlets to split the flow in four separate ways. A= 210	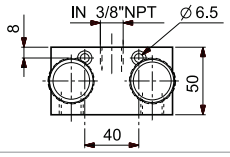	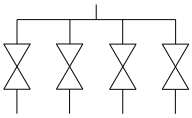

EURO PRESS PACK • Via M. Disma, 87 • 16042 Carasco (GE) ITALY
Tel. 0039 0185 35 271 • Fax 0039 0185 35 11 38

VR - ZOH

VR - IN-LINE REGULATING VALVES

ZOH - IN-LINE REGULATING VALVES

VR PRESSURE 2000 BAR

MODEL	Description		Symbol
VRF15	Needle valve. To shut off the flow.	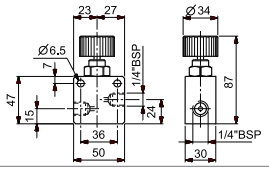	
VRF152	Double outlet needle valve. To split the flow in two separate ways. A= 115	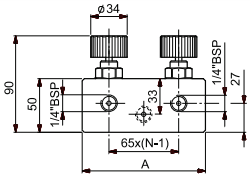	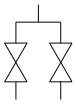
VRF153	Needle valve with three outlets to split the flow in three separate ways. A= 180	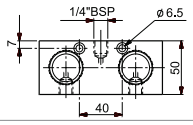	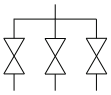
VRF154	Needle valve with four outlets to split the flow in four separate ways. A= 245		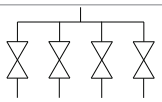

VR PRESSURE 3000 BAR

MODEL	Description		Symbol
VRF34	Needle valve. To exclude circuit branches.	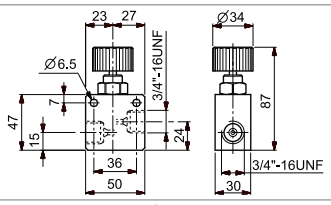	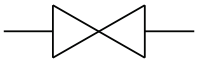
VRR34	One-way check valve. To shut off the oil flow in one direction.	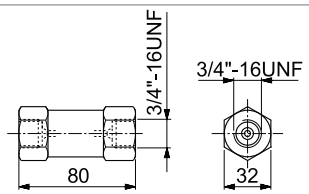	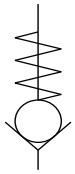

ZOH HYDRAULIC OIL

Always use EUROPRESS hydraulic oil or oil having the same technical characteristics. Different oil types might damage the seals or gaskets and equipment and would make the guarantee null and void.

Container size **1 - 10 lt**

FEATURES

EUROPRESS high pressure hydraulic oil is a mineral based oil to ISO VG 32 with excellent viscosity and lubrication properties. The use of EUROPRESS oil will ensure maximum efficiency and long service life of the equipment . EUROPRESS hydraulic oil is non foaming, will not leave gummy deposits, nor corrode valve seats, seals or gaskets, or the cylinder walls.

Supplied in 1, 5 and 10 lt. containers.

Code:

- **ZOH1** 1 litre Container
- **ZOH5** 5 litres Container.
- **ZOH10 10** litres Container.

EURO PRESS PACK • Via M. Disma, 87 • 16042 Carasco (GE) ITALY
Tel. 0039 0185 35 271 • Fax 0039 0185 35 11 38

HYDRAULIC TOOLS

HYDRAULIC TOOLS

Maintenance

UE ..... p. 96

UML ..... p. 100

UMP ..... p. 102

UMS ..... p. 103

UJ ..... p. 104

Bolting

UA ..... p. 105

UD ..... p. 106

US ..... p. 107

UWB - UWC .. p. 108

UT ..... p. 111

Tools

UB ..... p. 116

UL ..... p. 117

UP ..... p. 115

EURO PRESS PACK • Via M. Disma, 87 • 16042 Carasco (GE) ITALY
Tel. 0039 0185 35 271 • Fax 0039 0185 35 11 38

UE

PULLERS AND EXTRACTORS

p. 91

ACCESSORIES

UEB# Carry Case (except for the 50 ton model)

OPTIONS

Version Z (UEC#Z) complete puller supplied with self aligning type jaw puller(UEZ) instead of the standard type jaw puller UEG).

FEATURES

They consist of two parts:
- **Mechanical** manufactured in high quality steel to ensure reliability and long life
- **Hydraulics** consisting of a PS or PL pump, a cylinder from the CMF range with ZTE threaded hollow saddle, an SN20M hose assembly and G106L pressure gauge

Pullers of the **UE** range may be supplied in 5 tonnage types (5 - 10 – 20 – 30 – 50) and in 3 configurations, i.e.:
- **UEC# (complete puller set)** which includes all mechanical parts and the hydraulic components
- **UEG# (jaw puller)** consisting of 3 jaw puller and hydraulic components
- **UET# (press puller set)** consisting of: press puller internal and external puller, hydraulic components

The self aligning 3 jaw puller is also available for a more precise and easy positioning on the workplace.

APPLICATIONS

Indispensable when extracting gears, bearings, couplers and bushings etc.
A correct assessment of the item to be extracted as well as the force required is essential for correct selection of the puller component.

Each puller component has a different **operating pressure** which must never be exceeded. Please refer to data charts.

The safety regulations laid down in the operating and maintenance manual must be observed at all times.

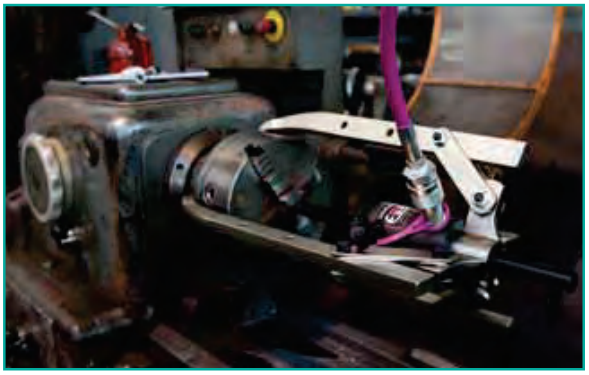

EURO PRESS PACK • Via M. Disma, 87 • 16042 Carasco (GE) ITALY
Tel. 0039 0185 35 271 • Fax 0039 0185 35 11 38

COMPLETE HYDRAULIC PULLERS

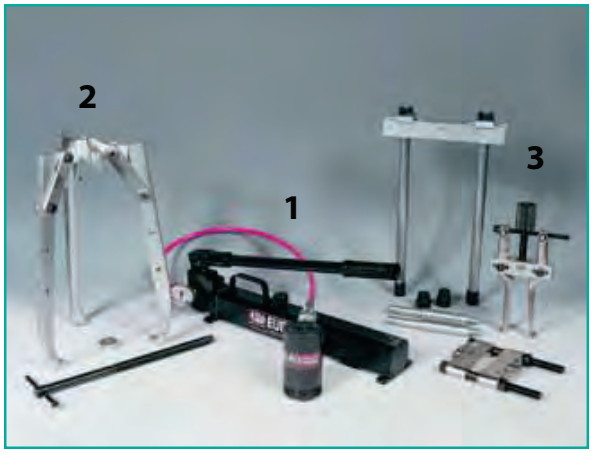

Force **5 - 50 t**

Pullers for specific applications and different tonnes, and for special use may be supplied on request.

SELECTION CHART FOR COMPLETE PULLERS

		MODEL				
Description		**UEC5**	**UEC10**	**UEC20**	**UEC30**	**UEC50**
HYDRAULICS UEU#	**Pos.**					
Hand pump	1	PS100	PL131	PL141	PL141	PL162
Cylinder		CMI5N125	CMF10N50E	CMF20N50E	CMF30N50E	CMF60N75E
Hose		SN20M	SN20M	SN20M	SN20M	SN20M
Pressure gauge		G106L	G106L	G106L	G106L	G106L
Max.operating pressure	-	**Refer to the capacity of each mechanical component**				
MECHANICAL PARTS UEC#M	**Pos.**					
Jaw pullers	2	UEG5M	UEG10M	UEG20M	UEG30M	UEG50M
Press, internal & external puller	3	UET5M	UET10M	UET20M	UET30M	UET50M

ACCESSORIES: CARRY CASE UEB

MODEL	For use with	Note
UEB10	UEC10	-
UEB20	UEC20	
UEB30	UEC30	Consisting of UEB10 + UEB20

EURO PRESS PACK • Via M. Disma, 87 • 16042 Carasco (GE) ITALY
Tel. 0039 0185 35 271 • Fax 0039 0185 35 11 38

UEG-UEZ

DOUBLE & TRIPLE GRIP JAW PULLERS SETS

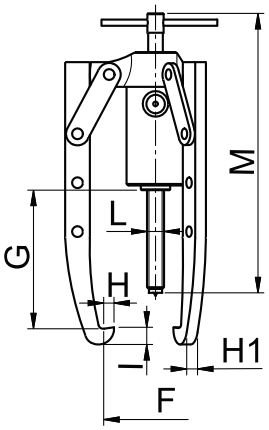

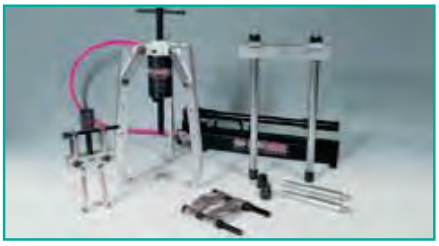

Force **5 - 50 t**

Pullers for specific applications and different tonnes, and for special use may be supplied on request.

SELECTION CHART FOR STANDARD (UEG) AND SELF ALIGNING TYPE (UEZ) JAW PULLERS

Description		MODEL				
		UEG5	**UEG10**	**UEG20**	**UEG30**	**UEG50**
		-	**UEZ10**	**UEZ20**	**UEZ30**	**UEZ50**
HYDRAULICS UEU#	**Pos.**					
Hand pump	1	PS100	PL131	PL141	PL141	PL162
Cylinder		CMI5N125	CMF10N50E	CMF20N50E	CMF30N50E	CMF60N75E
Hose		SN20M	SN20M	SN20M	SN20M	SN20M
Pressure gauge		G106L	G106L	G106L	G106L	G106L
Max.operating pressure	-	700 bar	560 bar	600 bar	615 bar	580 bar
MECHANICAL PARTS **UEG#M** / **UEZ#M**	**Pos.**					
Protection saddle	2	-	UETS10	UETS20	UETS30	UETS50
Number of jaws	3	2	* 2/3	2/3	2/3	2/3
Minimum spread mm	F	73	50	70	90	120
Maximum spread mm		195	350	480	580	920
Maximum reach mm	G	220	268	335	425	731
Jaw width mm	H	18	14	18	25	30
Jaw depth mm	H'	26	15	20	22	25
Jaw thickness mm	I	11	25	32	42	50
Adjusting screw thread	L	-	3/4" - 16 UNF	1" - 8 UNC	1 1/4" - 7 UNC	1 5/8" - 5,5 UNS
Adjusting screw length	M	-	400	670	790	975
Weight 2/3 jaw	kg	5	12	22/27	36/45	85/103

* Universal crosshead

The jaw puller **UEZ** is fitted with a self aligning mechanical device to synchronise closing of the jaws on the workpiece so that precise positioning can be obtained.

The 5 t. jaw puller may also be used as an internal puller by assembling the jaws facing outwards

EURO PRESS PACK • Via M. Disma, 87 • 16042 Carasco (GE) ITALY
Tel. 0039 0185 35 271 • Fax 0039 0185 35 11 38

HYDRAULIC PRESS PULLER SETS

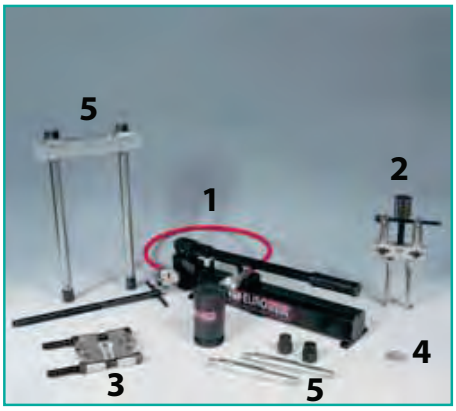

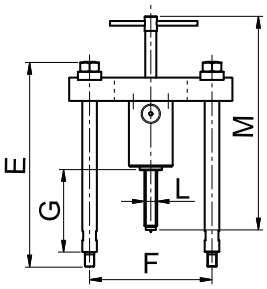

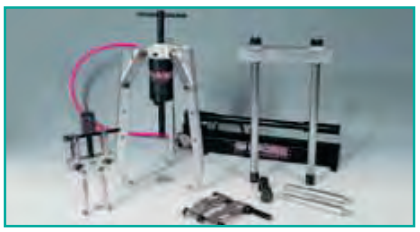

Force **5 - 50 t**

Pullers for specific applications and different tonnes, and for special use may be supplied on request.

SELECTION CHART FOR PRESS PULLERS

Description		MODEL												
		UET5		UET10		UET20				UET30			UET50	
HYDRAULICS UEU#	**Pos.**													
Hand pump	1	PS100		PL131		PL141				PL141			PL162	
Cylinder		CMI5N125		CMF10N50E		CMF20N50E				CMF30N50E			CMF60N75E	
Hose		SN20M		SN20M		SN20M				SN20M			SN20M	
Pressure gauge		G106L		G106L		G106L				G106L			G106L	
Max.operating pressure	-	700 bar		560 bar		600 bar				615 bar			580 bar	
MECHANICAL PARTS UET#M	**Pos.**													
Internal puller	2	-		UEI10		UEI20				UEI30			UEI50	
External puller	3	-		UEE10		UEE20				UEE30			UEE50	
Protection saddle	4	UETS5		UETS10		UETS20				UETS30			UETS50	
Number of legs	5	2	2	2	2	2	2	2	2	2	2	2	2	2
Leg length mm	E	180	360	209	460	209	336	515	665	328	582	836	820	1075
Maximum reach mm	G	100	280	-21	230	-56	71	250	400	4	258	512	399	655
Minimum spread mm	Fmin.	82		115		135				180			230	
Maximum spread mm	Fmax.	235		260		345				440			580	
Adjusting screw thread	L	-		3/4" - 16 UNF		1" - 8 UNC				1 1/4" - 7 UNC			1 5/8" - 5,5 UNS	
Adjusting screw length	M	-		400		670				790			975	
Weight	kg	5		13		32				55			115	

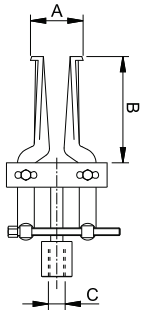

Internal puller UEI

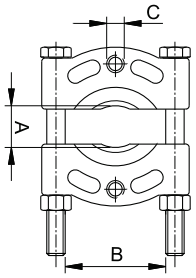

External puller UEE

INTERNAL PULLER UEI

MODEL	Force	Pressure	Dimensions mm				Weight
	t	bar	A min.	A max.	B	C	kg
UEI10	5	280	40	145	115	3/4" - 16 UNF	2
UEI20	10	300	32	160	140	1"- 8 UNC	2,5
UEI30	15	310	60	240	150	1 1/4" - 7 UNC	6
UEI50	25	290	60	240	150	1 5/8" - 5,5 UNS	6

EXTERNAL PULLER UEE

MODEL	Force	Pressure	Dimensions mm				Weight
	t	bar	A min.	A max.	B	C	kg
UEE10	7	370	10	110	110	5/8" - 18 UNF	2,5
UEE20	13	400	11	134	152	5/8" - 18 UNF	5,5
UEE30	20	410	15	250	260	1" - 14 UNF	25
UEE50	33	385	15	250	260	1 1/4" - 12 UNF	25

EURO PRESS PACK • Via M. Disma, 87 • 16042 Carasco (GE) ITALY
Tel. 0039 0185 35 271 • Fax 0039 0185 35 11 38

UML

LIGHTWEIGHT ALUMINIUM JACKS

In the **claw version** the load to be lifted shall not exceed the value indicated on the claw and in the chart.

Follow carefully the safety instruction as in the use and maintenance handbook

Follow our safety instructions. See useful pages. p. 126

FEATURES

UML are self contained compact lifting units with the capacity to lift up to 100 tonnes. They are portable, efficient and reliable.
They are available in three versions:

- **Standard** with plain ram for lifting vertically or pushing horizontally on the front face
- **Lock ring, with** screwed ram and locking collar, an ideal solution to support the load mechanically for long periods
- **With Claw** for conventional load lifting or lifting from very low heights on the claw. These models have extended bases for maximum stability.

All models are provided with
- A built-in safety valve to prevent overload
- A release valve controlled by an operating lever to lift and lower the jack.
- A built-in carry handle on models over 15 tons

APPLICATIONS

Because of their light weight and easy handling, these jacks are particularly versatile and suitable for all many applications in the industrial, civil, ship repair, and railway industries.

EURO PRESS PACK • Via M. Disma, 87 • 16042 Carasco (GE) ITALY
Tel. 0039 0185 35 271 • Fax 0039 0185 35 11 38

LIGHTWEIGHT ALUMINIUM JACKS

UML#N

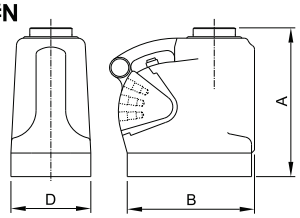

UML#G

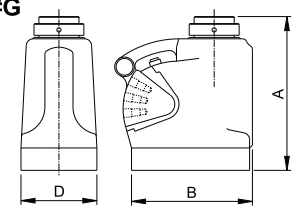

UML#C

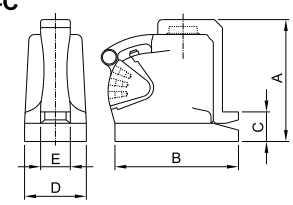

Force 6,5 - 100 t

Stroke 75 - 305 mm

SELECTION CHART: ALUMINIUM JACKS

Type	Pushing force	Maximum load on the claw	Stroke	MODEL	Dimensions mm					Weight
	t	t	mm		A	B	C	D	E	kg
Standard	6,5	-	75	UML6N75	131	159	-	76	-	3,6
	10	-	115	UML10N115	182	171				6,3
	15	-	152	UML15N152	230	197		92		10,0
	20	-	152	UML20N152	257	191		130		13,6
			305	UML20N305	445	267				20,4
	30	-	152	UML30N152	263	197		140		15,4
			305	UML30N305	451	273				23,4
	60	-	152	UML60N152	292	260		197		31,3
			305	UML60N305	505	348				55,0
	100	-	152	UML100N152	310	305		240		49,0
With safety lock ring	20	-	152	UML20G152	283	191	-	130	-	14,1
			305	UML20G305	470	267				20,9
	30	-	152	UML30G152	292	197		140		16,4
			305	UML30G305	479	273				24,4
	60	-	152	UML60G152	330	260		197		33,2
			305	UML60G305	543	348				52,0
	100	-	152	UML100G152	360	305		240		53,0
With claw	20	8	152	UML20C152	276	267	70	130	70	19,5
			305	UML20C305	464				80	28,2
	30	12	152	UML30C152	281	273	73	140	85	20,3
			305	UML30C305	470				95	31,0
	60	24	152	UML60C152	325	348	72	197	100	50,0
			305	UML60C305	469				110	81,0

EURO PRESS PACK • Via M. Disma, 87 • 16042 Carasco (GE) ITALY
Tel. 0039 0185 35 271 • Fax 0039 0185 35 11 38

UMP

UNIVERSAL HYDRAULIC JACK PRIMUS

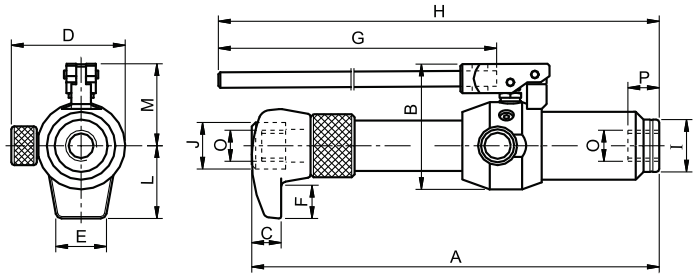

- Force **5 t**
- Stroke **150 mm**

FEATURES

Compact hydraulic lifter with integral hand pump and cylinder, manufactured from steel and aluminium. Due to its special rubber bladder type oil reservoir it can be used in any working position.
A built in safety valve prevents overload.
Supplied complete with a tread protection ring, lifting toe and pushing saddle as standard.
You can lift the load on the head or on the lifting toe or on the foot (by using the accessories).
The release valve handwheel allows the load to be lowered in a smooth controlled manner, suitable for use in temperatures ranging from -30 to +60 degrees C.

APPLICATIONS

The special design of the PRIMUS-lifter, allows it to be used in any working position which gives this jack a very wide range of heavy duty field applications.
Used widely in the mining, shipbuilding, railway and steel structural industries it is also suitable for use in rescue applications.
The PRIMUS-lifter is an essential piece of equipment for any repair facility.

p. 91

ACCESSORIES

- **ZUN5 Nipple,** to screw on clevis eye on top side

ZUE5 Clevis eye, for attachments on the rod (without nipple) or on top side of the cylinder (with nipple).
Hole dimensions 22 mm

OPTIONS

- **S Versione,** (UMP5N150WS) Tool without bracket.

SELECTION CHART

Pushing force	Stroke	Lift per handle stroke	Handle effort	Reservoir capacity	MODEL	Dimensions mm														Weight
t	mm	mm	N	cm³		A	B	C	D	E	F	G	H	I	J	L	M	O	P	kg
5	150	1,3	275	260	**UMP5N150W**	416	130	30	116	48	35	400	565	54	48	75	85	M32x2	20	9,3

EURO PRESS PACK • Via M. Disma, 87 • 16042 Carasco (GE) ITALY
Tel. 0039 0185 35 271 • Fax 0039 0185 35 11 38

STEEL HYDRAULIC JACKS

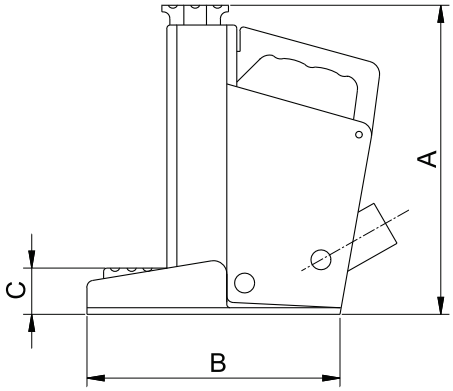

- Force 5 t
- Stroke 175 mm

FEATURES

- **Reduced front profile** which permits the insertion of the jack in very limited load spaces. This jack has a claw height of only 41 mm above ground level for lifting of loads from a very low height
- **The claw is manufactured in high tensile steel** sliding inside the jack and therefore perfectly guided, and with excellent resistance to off-centre loads
- **Will lift 5 Tonnes on the head and on the claw**
- **Lateral stability** is ensured by the sturdy extended base
- **Easy application** This jack is very easy to use, even in heavy duty conditions because of the single mechanism operating both the pump and the release valve
- **Built in relief valve** and a mechanical stop to prevent overstroking of the piston

APPLICATIONS

This jack, designed with a high safety factor to operate in heavy duty conditions, is made from steel without any aluminium components. It is widely used in the machinery moving, mining, ship repair and railway industries.

HYDRAULIC TOOLS

SELECTION CHART

Pushing force	Maximum load on the claw	Stroke	MODEL	Dimensions mm				Weight
t	t	mm		A	B	C	Width	kg
5	5	175	UMS5N175	327	265	41	118	18

EURO PRESS PACK • Via M. Disma, 87 • 16042 Carasco (GE) ITALY
Tel. 0039 0185 35 271 • Fax 0039 0185 35 11 38

UJ

EUROJACK HEAD AND TOE LIFTING JACK

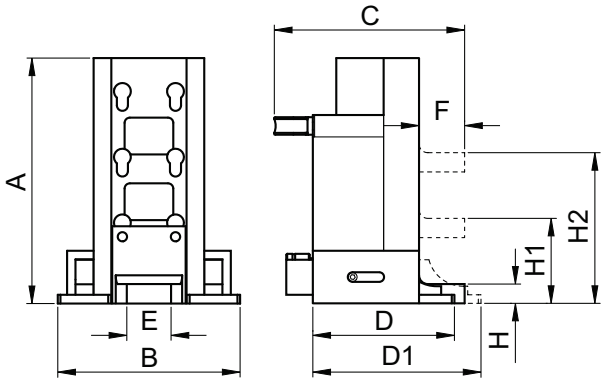

- Force 10 - 25 t
- Stroke 150 mm
- Max Working Pressure: 700 bar

FEATURES

Power jack with adjustable lifting toe designed to lift large loads from very low positions.
They are provided with extendable bases for maximum stability. The lifting toe can be positioned at three different levels with only 25 mm minimum clearance needed. The head of the jack may also be used to lift vertically, or if the jack is turned onto its side it can be used for pushing.

APPLICATIONS

Particularly suitable for lifting, moving and levelling of machinery and heavy equipment from a very low starting height.

Hand Pump model **PL131** is the recommended pump to operate the power jack **UJ** model.

p. 49

SELECTION CHART

Pushing force	Stroke	Oil volume	MODEL	Dimensions mm										Weight
t / kN	mm	cm^3		A	B	C	D	D1	E	F	H	H1	H2	kg
10 / 111	150	238	**UJ10**	280	206	215	160	190	50	50	25	100	175	22
25 / 232	150	498	**UJ20**	314	271	290	230	265	70	70	30	110	190	45

EURO PRESS PACK • Via M. Disma, 87 • 16042 Carasco (GE) ITALY
Tel. 0039 0185 35 271 • Fax 0039 0185 35 11 38

FLANGE SPREADER

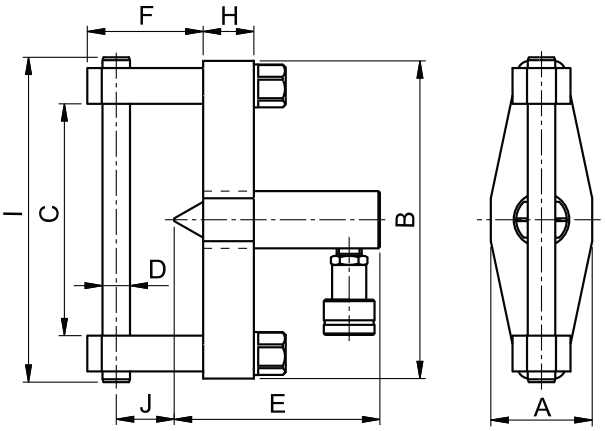

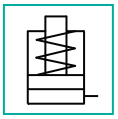

- Force **5 - 10 t**
- Opening **48 - 223 mm**
- Pressure: **700 bar**

FEATURES

The UA Europress flange spreader is completely Nitreg treated (excluded the aluminium parts) for a bigger strength and resistance to corrosion. It' equipped with a standard CMI Europress cylinder, easy to use, safe and lightweight. It's available in the version of 5 and 10 ton, with a working pressure of 700 bar.
The flanges can be regulated to reach an opening from 48 to 223 mm.
It's supplied complete with the coupler.

OPERATIONAL AERAS

Petrochemistry industry, industrial and shipyards maintenance are the fields where this useful and essential tool is mostly used..

For the best use of UA Flange Spreader we recommend our hand pumps model **PS100** or **PL140.**

p. 53 p. 49

SELECTION CHART

Pushing force	Flange opening	Stroke	Oil volume	MODEL	Dimensions mm									Weight
t	mm	mm	cm³		A	B	C	D	E	F	H	I	J	kg
5	3 - 25	50	35	UA5	70	220	48-161	19	143	80	35	227	40	4,0
10	4 - 35	50	80	UA10	100	300	64-223	32	153	90	50	315	50	9,5

EURO PRESS PACK • Via M. Disma, 87 • 16042 Carasco (GE) ITALY
Tel. 0039 0185 35 271 • Fax 0039 0185 35 11 38

UD

HYDRAULIC SPREADERS

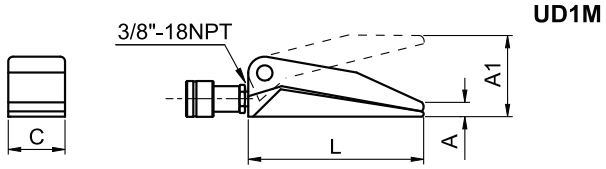

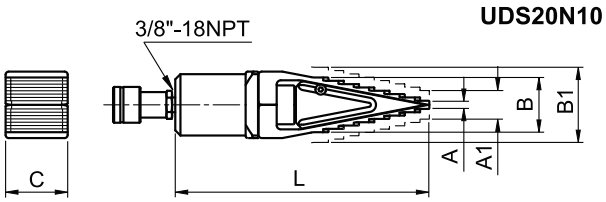

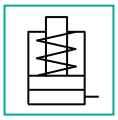

Force	**1 - 20 t**
Max working Pressure:	**700 bar**

FEATURES AND APPLICATIONS

Depending on the model they are ideal for lifting and levelling of machinery, splitting flanges, and for reforming bodywork.

Pistons are spring return on all models and the tool can be ordered in the following versions:

- **Spreader** 1 ton capacity **(UD1M)**
- **Spreader** 20 ton capacity **(UDS20N10)**
- **Spreader set** composed of UD1M + hand pump PS100 + hose SN10M **(UD1MC)**
- **Spreader set** composed of UDS20N10 + hand pump PL131 + hose SN10M **(UDS20C)**

Follows our safety instruction.
See **useful pages.**

p. 126

SELECTION CHART

Force	MODEL	Dimensions mm						Weight
t		A	A1	B	B1	L	C	kg
1	UD1M	14	80	-	-	170	52	3,5
17	UDS20N10	8	18	54	64	246	60	3,7

EURO PRESS PACK • Via M. Disma, 87 • 16042 Carasco (GE) ITALY
Tel. 0039 0185 35 271 • Fax 0039 0185 35 11 38

NUT CUTTER

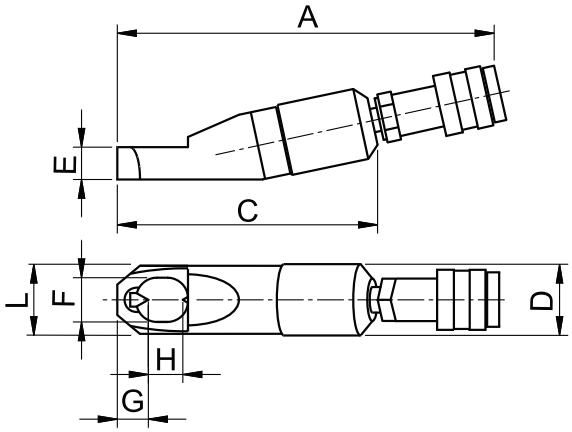

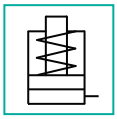

Force	**5 - 50 t**
Nut thread	**M8 - M39**
Max Working Pressure:	**700 bar**

FEATURES

US series nut cutters feature **opposed double blades** which permit nut cutting in one single operation (EUROPRESS patented system). This system reduces cutting time and allows operation in confined spaces.
The nuts to be cut may be in high tensile steel with hardness up to 44 HRCHRC.
After cutting, the piston is retracted by spring return.
Worn-out blades may be re-sharpened or replaced.

APPLICATIONS

US nut cutters are designed to cut any nuts that are difficult to remove; they are appropriate for maintenance jobs on pipes and flanges, in the mining, steel structural work and railway sectors, these being a few of the many applications.

Take care when using the cutter to ensure the blade is completely square to the nut to be cut. This will prevent any side loading or damage to the cutter or the blades..

ACCESSORIES

US#R spare blade set

SELECTION CHART

Bolt range	Hexagon nut range	Force	Oil Volume	MODEL	Dimensions mm										Weight
mm	mm	t	cm³		A	B	C	D	E	F	G	H max.	H min.	L	kg
M8÷M12	13÷19	5	12	**US1319**	218	62	137	42	19	26	18	23	8	40	1,2
M12÷M16	19÷24	11	25	**US1924**	243	73	161	59	25	34	22	28	12	55	2,3
M16÷M22	24÷32	16	48	**US2432**	265	78	180	70	30	41	24	36	16	63	3,2
M22÷M27	32÷41	22	72	**US3241**	304	88	222	84	35	55	28	45	22	78	5,1
M27÷M33	41÷50	32	119	**US4150**	351	118	283	104	42	70	32,5	54	27	96	10,4
M33÷M39	50÷60	50	220	**US5060**	403	139	333	124	52	82	38	64	33	118	17,5

EURO PRESS PACK • Via M. Disma, 87 • 16042 Carasco (GE) ITALY
Tel. 0039 0185 35 271 • Fax 0039 0185 35 11 38

UWB - UWC

TORQUE WRENCHES

FEATURES

EUROPRESS torque wrenches are used to accurately tighten nuts to the correct torque setting.
Their high power to weight ratio, excellent application flexibility, and easy use make UWB and UWC torque wrenches a very popular tool.
They are lightweight and portable and the Light Alloy version offers a 30% weight saving over the standard model.

They are available in four different versions:
- **UWB# in steel with square insert** to be used on standard sockets
- **UWBL# in light alloy with square insert** to be used on standard sockets
- **UWC# in steel with replaceable cartridge** and female hexagon
- **UWCL# in light alloy with interchangeable cartridge** and female hexagon

UWC# and UWCL# wrenches consist of two parts:
- the body with double acting cylinder
- the interchangeable cartridge

APPLICATIONS

EPP Torque wrenches enable tightening and removal of nuts in many Industrial and offshore applications involving pumps, valves, compressors, flanges, heat exchangers, presses, rolling mills and power generating machinery.
In particular, UWC# and UWCL# wrenches can be used whenever the height is not sufficient to use the bushings.

Torque wrenches with interchangeable cartridges on request are available with:
- hexagons reducing sleeves
- square drive adapters
- adapters for use with allen screws

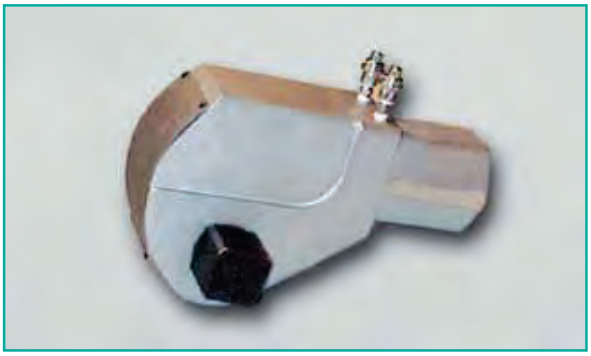

Hydraulic Power units from the **MDW** Series are designed for use with torque wrenches.

p. 65

Deformed or rusted nuts that are difficult to remove can also be removed by using the **US** nut cutter.

p. 107

EURO PRESS PACK • Via M. Disma, 87 • 16042 Carasco (GE) ITALY
Tel. 0039 0185 35 271 • Fax 0039 0185 35 11 38

TORQUE WRENCHES

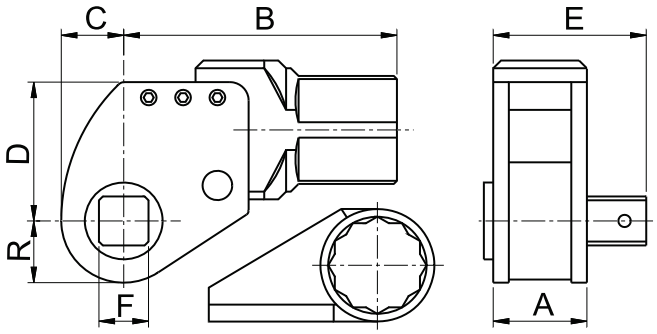

- Max. Torque **1360 - 108800 Nm**
- Square Insert **3/4" - 3 1/2"**

SELECTION CHART: STEEL WRENCH WITH SQUARE INSERT FOR BUSHINGS

Max. Torque	F	MODEL	Dimensions mm						Weight
Nm	inch		A	B	C	D	E	R	kg
1360	3/4" - 1"	UWB1	42	115	28	65	70	24	4
2040		UWB2	50	140	30	65	90	25	6
4488	1"	UWB4	52	175	40	90	92	35	8
7888	1 1/2"	UWB8	65	180	45	95	120	37	13
10060		UWB10	65	207	58	112	120	45	16
14960		UWB15	83	222	66	130	138	45	22
20400	2 1/2"	UWB20	95	230	70	140	172	52	31
28560		UWB28	97	265	74	157	175	62	44
43520		UWB41	115	290	80	175	185	69	54
68000	2 1/2" - 3 1/2"	UWB68	145	320	90	200	230	85	103
108800		UWB109	172	416	100	258	272	100	178

SELECTION CHART: LIGHT ALLOY WRENCHES WITH SQUARE INSERT FOR BUSHINGS

Max. Torque	F	MODEL	Dimensions mm						Weight
Nm	inch		A	B	C	D	E	R	kg
2040	1"	UWBL2	50	145	50	70	80	30	3
4500		UWBL4	65	181	48	103	95	37	5
9500	1 1/2"	UWBL10	90	200	68	107	130	50	9
15000		UWBL15	102	221	72	118	147	52	13
34000	2 1/2"	UWBL34	120	300	90	165	185	70	28

EURO PRESS PACK • Via M. Disma, 87 • 16042 Carasco (GE) ITALY
Tel. 0039 0185 35 271 • Fax 0039 0185 35 11 38

UWC

TORQUE WRENCHES

UWC

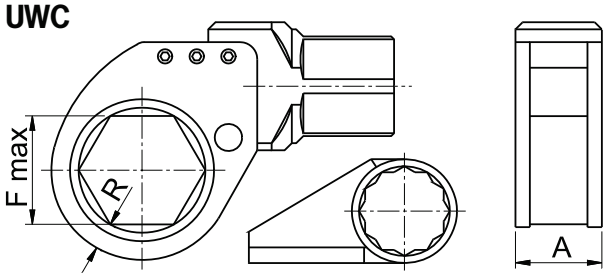

UWCL

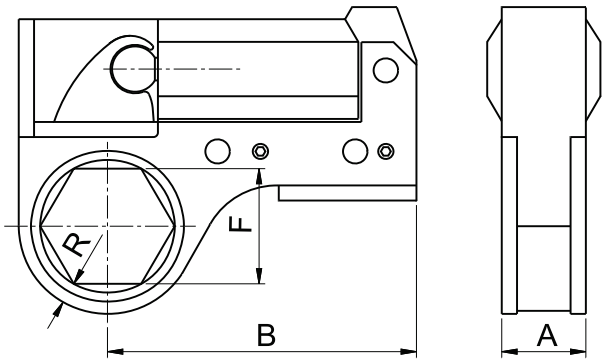

- Max Torque **1360 - 108800 Nm**
- Hexagon Cartridge: **24 - 250 mm**

HYDRAULIC TOOLS

SELECTION CHART: STEEL WRENCHES WITH INTERCHANGEABLE CARTRIDGE

Max Torque	F max	MODEL	Dimensions mm	
Nm	mm		A	R
1360	41	UWC1	38	11
2040	55	UWC2	41	12
4488	65	UWC4	52	15
7888	75	UWC8	58	16
10060	80	UWC10	64	18
14960	120	UWC15	82	20
20400	120	UWC20	96	22
28560	130	UWC28	100	25
43520	155	UWC41	120	30
68000	205	UWC68	147	38
108800	250	UWC109	180	48

SELECTION CHART: LIGHT ALLOY WRENCHES WITH INTERCHANGEABLE CARTRIDGE

Max Torque	F	MODEL	Dimensions mm		
Nm	mm		A	B	R
1630	24 - 36	UWCL2	32	170	12
2850	36 - 60	UWCL3	35		14
4100	46 - 65	UWCL4	40	200	15
6120	50 - 80	UWCL6	42		16
10500	65 -100	UWCL10	64	230	18
19000	80 -120	UWCL19			19
27000	90 - 130	UWCL27	80	280	23
41000	100 - 155	UWCL41		290	27

EURO PRESS PACK • Via M. Disma, 87 • 16042 Carasco (GE) ITALY
Tel. 0039 0185 35 271 • Fax 0039 0185 35 11 38

BOLT TENSIONERS 1000 - 1500 BAR

FEATURES

EUROPRESS bolt tensioners are made of an hydraulic part with a supporting base (bridge) to which a threaded puller and a polygonal wrench in its various sizes may be added. This allows to cover a large number of tie rods and to optimize the number of bolt tensioners necessary. According to their technical characteristics, they differ as:

UTN series at 1000 bar, provide a traction force of about the 70% of the break point of a steel bolt grade 8.8 of the biggest size (value of max thread in the chart).
They are equipped with **K13M** coupler.

UTH series at 1000 bar, with most of these you can obtain a traction force equal to 70% of the yield stress of a steel bolt grade 10.9 of the maximum size (value of max thread in the chart).
They are equipped with **K13M** coupler.

UTV series at 1500 bar, that can develop a traction force of about the 70% of the break point of a steel bolt grade 10.9 of the biggest size (value of max thread in the chart).
They have reduced overall dimensions if referred to the 1000 bar series, due to their high working pressure. They are equipped with a **K15M** coupler, and have a second auxiliary hole (1/4" BSP) that can be joined with a quick coupler (to be ordered separately) for in line connections.

All tensioners are supplied with **tommy bar** to operate the threaded puller and the polygonal wrench.

The gas nitriding treatment (Nitreg) provided to all steel of EUROPRESS products makes them particularly fit for working outside or in aggressive locations, thanks to their high resistance to corrosion.

APPLICATIONS

The big advantage of tensioning is given by the fact that it is possible to charge in advance a tie rod with the required load in an extremely precise manner, thus avoiding the force losses due to the frictions of the traditional torque tightening. Their great facility in use, the possibility to save time and staff and their precision are all factors that make this technique particularly useful in those sectors where a perfect coupling or flange tightness is essential for the safety of people and machinery.
In particular in the industrial and oil sectors and in all situations where it is necessary to tighten with extreme accuracy nuts or threaded tie rods.
They are widely used to tighten valves, pumps, heat exchangers, flanges, etc.

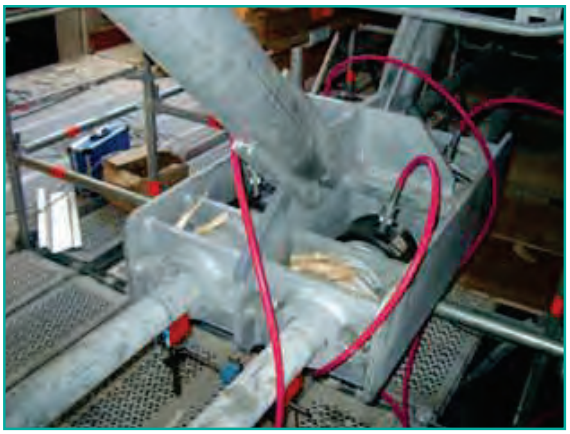

Tensioning system for roof's supporting structure while building the new Rome's Music Auditorium. On this job were used bolt tensioner cylinders specially manufactured from Euro Press Pack. (Rome Italy, 2001)

If you use a tensioning system where you choose to tension in various steps (50%, 33% or even 25% of the points) for space reasons, take care to alternate the tensioners and to locate them in opposite positions.

To operate in complete safety be careful that the threaded screw sticks out of the nut at least as much as the measure of the diameter of the tensioner.

The tensioner maximum capacity refers to its maximum working pressure; for smaller loads reduce the pressure in a proportional way.

EURO PRESS PACK • Via M. Disma, 87 • 16042 Carasco (GE) ITALY
Tel. 0039 0185 35 271 • Fax 0039 0185 35 11 38

UTN-UTH

BOLT TENSIONERS 1000 BAR

MATCHING CHART

COMPLETE BOLT TENSIONER	Hydraulic part	Threaded puller	Polygonal wrench
UTN4864M48	UTN4864	UTB484	UTC48
UTN4864M56		UTB564	UTC56
UTN4864M64		UTB644	UTC64
UTN6476M64	UTN6476	UTB645	UTC64
UTN6476M72		UTB725	UTC 72
UTN6476M76		UTB765	UTC76
UTN76100M76	UTN76100	UTB766	UTC76
UTN76100M80		UTB806	UTC80
UTN76100M90		UTB906	UTC90
UTN76100M100		UTB1006	UTC100

COMPLETE BOLT TENSIONER	Hydraulic part	Threaded puller	Polygonal wrench
UTH1624M16	UTH1624	UTB161	UTC16
UTH1624M20		UTB201	UTC20
UTH1624M24		UTB241	UTC24
UTH2739M27	UTH2739	UTB272	UTC27
UTH2739M30		UTB302	UTC30
UTH2739M36		UTB362	UTC36
UTH2739M39		UTB392	UTC39
UTH3952M39	UTH3952	UTB393	UTC39
UTH3952M42		UTB423	UTC42
UTH3952M52		UTB523	UTC52
UTH4864M48	UTH4864	UTB484	UTC48
UTH4864M56		UTB564	UTC56
UTH4864M64		UTB644	UTC64
UTH6476M64	UTH6476	UTB645	UTC64
UTH6476M72		UTB725	UTC72
UTH6476M76		UTB765	UTC76
UTH76100M76	UTH76100	UTB766	UTC76
UTH76100M80		UTB806	UTC80
UTH76100M90		UTB906	UTC90
UTH76100M100		UTB1006	UTC100

EURO PRESS PACK • Via M. Disma, 87 • 16042 Carasco (GE) ITALY
Tel. 0039 0185 35 271 • Fax 0039 0185 35 11 38

UTN-UTH

TENSIONERS 1000 BAR

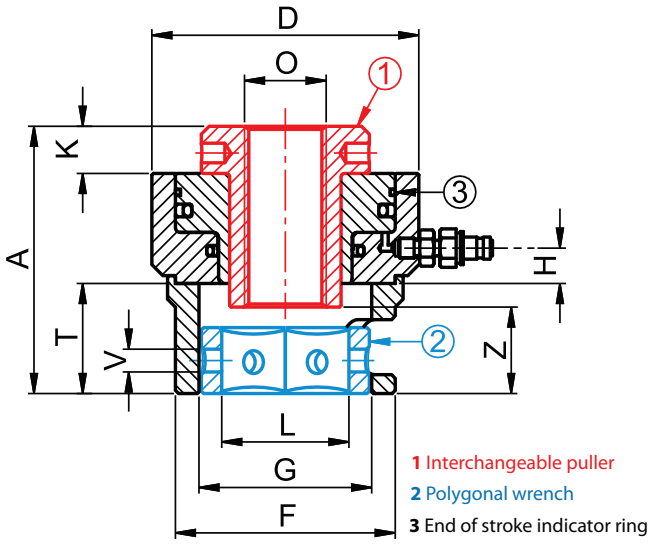

1 Interchangeable puller
2 Polygonal wrench
3 End of stroke indicator ring

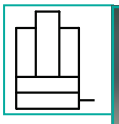

- Force **99 - 4369 kN**
- Stroke: **15 mm**
- Max working pressure **1000 bar**
- Threaded puller **M16 - M100**

SELECTION CHART

Operating force @ pressure		Oil volume	Screw	MODEL									Threaded puller	Polygonal wrench		Weight
kN	bar	cm³	mm		A	Ø D	Ø F	Ø G	H	T	Z	K	O	L	Ø V	kg
659	519	191	M48	UTN4864M48	185	195	165	130	20	80	65	35	M48 x 5	76	12,5	24
909	715		M56	UTN4864M56									M56 x 5,5	86		
1198	942		M64	UTN4864M64									M64 x 6	96		
1198	626	287	M64	UTN6476M64	200	240	200	150	25	95	80	40	M64 x 6	96		37
1549	810		M72	UTN6476M72									M72 x 6	106	20,5	
1742	910		M76	UTN6476M76									M76 x 6	111		
1742	601	438	M76	UTN76100M76	230	295	245	190	30	115	100	45	M76 x 6	111		59
1946	672		M80	UTN76100M80									M80 x 6	116		
2504	864		M90	UTN76100M90									M90 x 6	131		
2898	1000		M100	UTN76100M100									M100 x 6	146		
99	381	39	M16	UTH1624M16	122	85	70	55	22	40	25	20	M16 x 2	24,5	8,5	3,4
154	595		M20	UTH1624M20									M20 x 2,5	30,5		
222	857		M24	UTH1624M24									M24 x 3	36,5		
289	542	80	M27	UTH2739M27	145	125	100	80	21	60	45	25	M27 x 3	41,5	10,5	7,5
353	661		M30	UTH2739M30									M30 x 3,5	46,5		
515	963		M36	UTH2739M36									M36 x 4	55,5		
534	1000		M39	UTH2739M39									M39 x 4	60,5		
615	632	146	M39	UTH3952M39	165	170	135	110	17,5	70	55	30	M39 x 4	60,5	12	15
706	727		M42	UTH3952M42									M42 x 4,5	66		
972	1000		M52	UTH3952M52									M52 x 5	81		
928	553	252	M48	UTH4864M48	185	215	165	130	20	80	65	35	M48 x 5	76	12,5	27
1278	762		M56	UTH4864M56									M56 x 5,5	86		
1679	1000		M64	UTH4864M64									M64 x 6	96		
1685	701	360	M64	UTH6476M64	200	255	200	150	25	95	80	40	M64 x 6	96	20,5	39
2179	907		M72	UTH6476M72									M72 x 6	106		
2403	1000		M76	UTH6476M76									M76 x 6	111		
2450	561	655	M76	UTH76100M76	230	340	245	190	30	115	100	45	M76 x 6	111		71
2736	626		M80	UTH76100M80									M80 x 6	116		
3522	806		M90	UTH76100M90									M90 x 6	131		
4369	1000		M100	UTH76100M100									M100 x 6	146		

EURO PRESS PACK • Via M. Disma, 87 • 16042 Carasco (GE) ITALY
Tel. 0039 0185 35 271 • Fax 0039 0185 35 11 38

UTV

TENSIONERS 1500 BAR

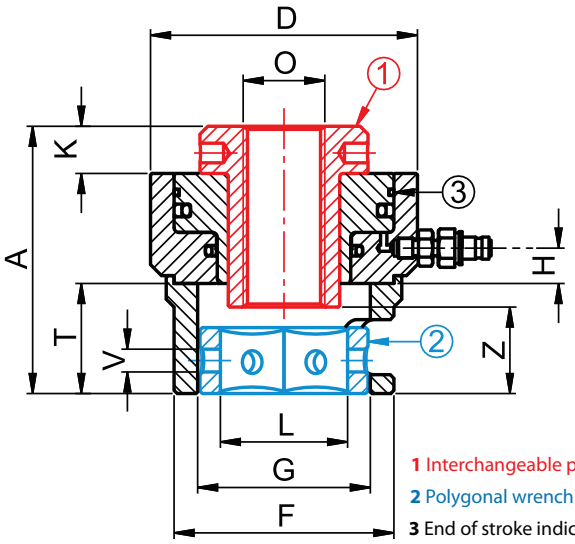

1 Interchangeable puller
2 Polygonal wrench
3 End of stroke indicator ring

Force	99 - 3522 kN
Stroke	12 mm
Max working pressure	1500 bar
Threaded puller	M16 - M90

MATCHING CHART

COMPLETE BOLT TENSIONER	Hydraulic part	Threaded puller	Polygonal wrench
UTV1624M16	UTV1624	UTB161V	UTC16V
UTV1624M20		UTB201V	UTC20V
UTV1624M24		UTB241V	UTC24V
UTV2736M27	UTV2736	UTB272V	UTC27V
UTV2736M30		UTB302V	UTC30V
UTV2736M36		UTB362V	UTC36V
UTV3945M39	UTV3945	UTB393V	UTC39V
UTV3945M42		UTB423V	UTC42V
UTV3945M45		UTB453V	UTC45V
UTV4860M48	UTV4860	UTB484V	UTC48V
UTV4860M56		UTB564V	UTC56V
UTV4860M60		UTB604V	UTC60V
UTV6472M64	UTV6472	UTB645V	UTC64V
UTV6472M68		UTB684V	UTC68V
UTV6472M72		UTB724V	UTC72V
UTV7690M76	UTV7690	UTB766V	UTC76V
UTV7690M80		UTB806V	UTC80V
UTV7690M90		UTB906V	UTC90V

SELECTION CHART

Operating force @ pressure	Stroke	Oil volume	Screw	MODEL	A	Ø D	Ø F	Ø G	H	* Minimum centre distance between bordering stud bolts	K	Threaded puller O	Polygonal wrench L	Polygonal wrench Ø V	Weight
kN/ bar	mm	cm³	mm							mm					kg
236/1500	6	9,4	M16	UTV1624M16	117	73	65	49	25	42	12	M16 x 2	24,5	8,5	2,5
			M20	UTV1624M20						46		M20 x 2,5	30,5		
			M24	UTV1624M24						50		M24 x 3	36,5		
530/1500	12	42,4	M27	UTV2736M27	145	108	90	73	35	64	15	M27 x 3	41,5	10,5	6
			M30	UTV2736M30						68		M30 x 3,5	46,5		
			M36	UTV2736M36						73		M36 x 4	55,5		
804/1500	12	64,3	M39	UTV3945M39	168	138	120	98	30	89	18	M39 x 4	60,5	12,5	12,2
			M42	UTV3945M42						92		M42 x 4,5	66		
			M45	UTV3945M45						95		M45 x 4,5	71		
1472/1500	12	117,8	M48	UTV4860M48	175	175	145	120	30	110	20	M48 x 5	76	12,5	18,8
			M56	UTV4860M56						116		M56 x 5,5	86		
			M60	UTV4860M60						120		M60 x 5,5	91		
2050/1500	12	164	M64	UTV6472M64	190	205	173	138	30	132	25	M64 x 6	96	16,5	27,3
			M68	UTV6472M68						135		M68 x 6	101		
			M72	UTV6472M72						138		M72 x 6	106		
3581/1500	12	286,5	M76	UTV7690M76	227	270	235	175	38	160	30	M76 x 6	111	20,5	58,7
			M80	UTV7690M80						163		M80 x 6	116		
			M90	UTV7690M90						172		M90 x 6	131		

* This means the minimum centre distance allowing for the installation of one single tensioner without any interference problems. If using a multiple tensioning system, this distance is equal to the figure in column ØD (external diameter)

EURO PRESS PACK • Via M. Disma, 87 • 16042 Carasco (GE) ITALY
Tel. 0039 0185 35 271 • Fax 0039 0185 35 11 38

TENSIONING SYSTEMS - UP PRESSES

HAND PUMPS, POWER PACKS, ACCESSORIES 1000 - 1500 BAR

UP PRESSES

HOW TO CHOOSE A SYSTEM

The best system can be chosen according to the oil quantity of the bolt tensioner or set of bolt tensioners and the drive speed required. Various types of EUROPRESS pumps can be chosen and combined according to the desired working pressure, their reservoir, capacity and the valve function.
A gauge with eventually its gauge adaptor and a hose complete with coupler (with the correct working pressure according to the chosen bolt tensioner), must always be combined with the pump.

1000 BAR SYSTEMS

Operation + gauge	Single stage	Double stage	Delivery	Tank	Valve	Adjustable relief valve
PS10010G	•		1,0 cm³	0,42 l	By pass	-
PL16#10+ZPS53+G16		•	32/1,6 cm³	2,3/4,3/7,8 l	By pass	-
MLP2#TA+ZPS12+G16	-	-	0,5/0,1 l/min	2,6/5,0/10 l	Pedal 3/3	-
MDM21GJRT		•	2,3/0,3 l/min	2,6 l	Manual 3/2	•
MEC#M21GRT	•		0,6 l/min	5/10/20/40 l	Manual 3/2	•

HOSE to connect pump with tensioner: **SN#FT.**

1500 BAR SYSTEMS

Operation + gauge	Single stage	Double stage	Delivery	Tank	Valve	Adjustable relief valve
PL16#16+ZPF14+G16		•	32/1,6 cm³	2,3/4,3/7,8 l	By pass	-
MLP2#VAG (*)	-	-	0,44/0,08 l/min	2,6/5,0/10 l	Pedal 3/3	-
MDM21GJRV (*)		•	1,8/0,2 l/min	2,6 l	Manual 3/2	•

(*)Power packs supplied with coupler K15M

HOSE to connect hand pump to bolt tensioner: **SM#PFV** hose type SM @ 1800 bar with RN32 at one end (pump side) and RN32 + K15X at the other end (tensioner side)

HOSE to connect power pack to bolt tensioner: **SM#FFV** hose type SM @ 1800 bar + RN32 and K15X at both ends.

UP PRESSES

FEATURES

Made of steel and equipped with a hydraulic part, they are produced on request and can be customised according to specific needs. The hydraulic part is made of standard products with single or double acting cylinder, single or double phase pump and gauge to guarantee more safety to the system.

Our Technical Department is at your disposal to study special presses as per customer requirements.

Special customised press

EURO PRESS PACK • Via M. Disma, 87 • 16042 Carasco (GE) ITALY
Tel. 0039 0185 35 271 • Fax 0039 0185 35 11 38

UB

PIPE BENDERS

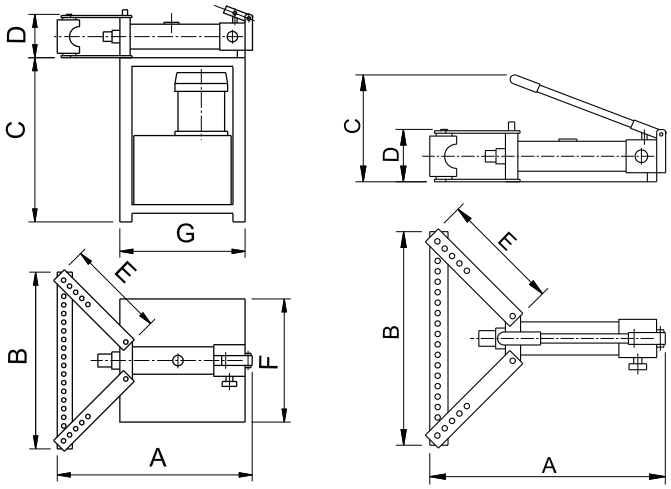

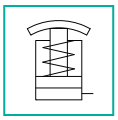

Capacity **3/8" - 4"**

Pipe benders may be supplied upon request for pipe sizes up to 6" NB or for special applications.

FEATURES

They are available in two versions:

- **UB# -** with **hand pump** and former sets for use on Nominal Bore Tubes from 3/8" to 4"
- **UB#M -** with **motor-driven** pump complete with former set from 3/8" to 4"

If necessary this particularly silent and fast version can also be manually operated.

APPLICATIONS

UB pipe benders are suitable for cold-bending without filling from 3/8" to 4" sized nominal bore tubes to obtain one shot right and left bends up to 90°.

SELECTION CHART

MODEL	Type of Operation	Former Dimensions											Dimensions mm							Weight
		3/8"	1/2"	3/4"	1"	1"1/4	1"1/2	2"	2"1/2	3"	3"1/2	4"	A	B	C	D	E	F	G	kg
UB2	Hand Pump	•	•	•	•	•	•	•					710	645	460	160	375	-	-	75
UB3	Hand Pump	•	•	•	•	•	•	•	•	•			810	980	550	215	540	-	-	135
UB4	Hand Pump	•	•	•	•	•	•	•	•	•	•	•	870	1016	730	250	590	-	-	180
UB4M	Electric	•	•	•	•	•	•	•	•	•	•	•	870	1016	765	250	590	575	585	300

EURO PRESS PACK • Via M. Disma, 87 • 16042 Carasco (GE) ITALY
Tel. 0039 0185 35 271 • Fax 0039 0185 35 11 38

LOAD CELLS

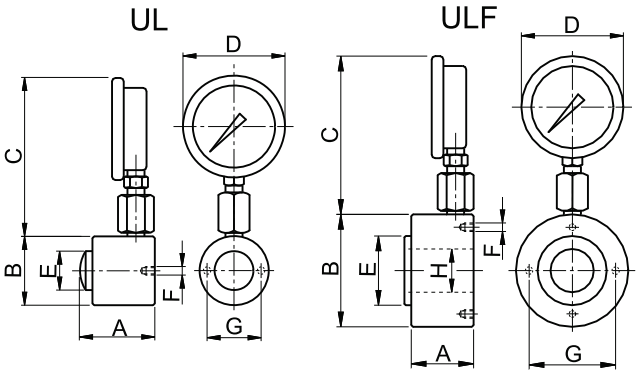

Force **5500 - 23000 kg**

FEATURES

UL series load cells have been fully nitrided to give them a high corrosion resistance. They are available in two versions:

- **UL - with solid rod**
  Fitted with a spherical push saddle for off centre load alignment
- **ULF - with hollow rod**
  To insert threaded rods or tie bars

All models are supplied with pressure gauges marked in kg and with a maximum indicating pointer to measure the maximum load. Degree of accuracy: ±2.5%.

APPLICATIONS

They are used in many sectors and whenever or wherever it is necessary to measure forces and loads. Because of the nitride treatment they are suitable for outdoor operation or in very aggressive environments.

OPTION

F Version Load Cell complete with 1m flexible hose.

HYDRAULIC TOOLS

SELECTION CHART

Capacity	MODEL	Dimensions mm								Weight
kg		A	B	C	D	E	F	G	H	kg
5500	UL05	85	80	217	118	45	2 x M6	65	-	3,7
11000	UL10									
23000	UL23	93	105			65	2 x M8	90	-	6,5
15000	ULF15	80	130			80	4 x M8	100	50	7,0

MODEL CODE

UL	-	05	#
Load Cell	- with solid rod **F** with hollow rod	Capacity in tonnes	**F** with 1m flexible tube

EURO PRESS PACK • Via M. Disma, 87 • 16042 Carasco (GE) ITALY
Tel. 0039 0185 35 271 • Fax 0039 0185 35 11 38

AUTOMOTIVE EQUIPMENT

AUTOMOTIVE EQUIPMENT

Mobile folding Crane

UGC ..... p. **119**

Trolley Jacks

UGJ ..... p. **120**

Hydraulic lifting Tables

UGT ..... p. **121**

Hydraulic Bottle Jacks

UMB ..... p. **122**

EURO PRESS PACK • Via M. Disma, 87 • 16042 Carasco (GE) ITALY
Tel. 0039 0185 35 271 • Fax 0039 0185 35 11 38

MOBILE FOLDING FLOOR CRANE

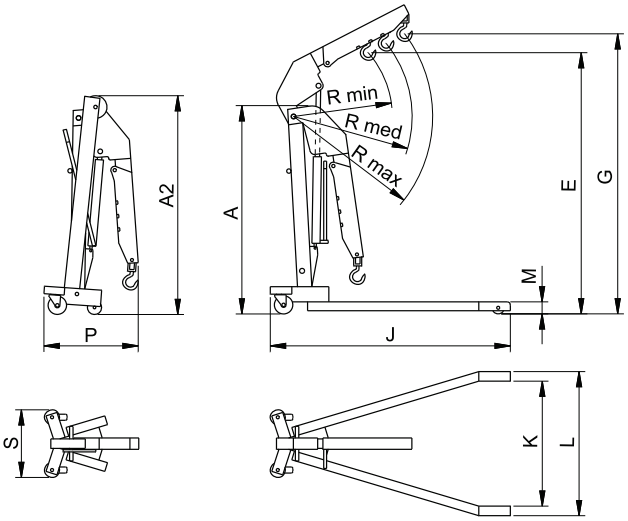

Capacity **500 - 2000 kg**

FEATURES

UGC floor cranes are robust, versatile, and fully folding for easy storage.
There are three models available with maximum lifting capacities from 500kg to 2000 kg. Each model is fitted with hard wearing polyamide wheels and castors for smooth and quiet operation.
The three position fully extendable jib is fitted with a handle to facilitate easy positioning and is complete with lifting hook.
The combined cylinder and pump unit swivels to allow the operator maximum access and control.
The cylinder has a safety valve and a stroke limitation device.

APPLICATIONS

These cranes are used in a wide variety of applications including, machinery and engine removal, and in machine shops.
UGC cranes are essential for lifting, moving and positioning of motors and engines and where space is limited.

Always check that the pin is fully secured in the correct locating hole, depending on the jib position, and the load to be lifted.

SELECTION CHART

Capacity			MODEL	Dimensions mm													Weight
Position 1	Position 2	Position 3															
kg	kg	kg		A	A2	E	G	J	K	L	M	R min.	R med.	R max	P	S	kg
500	400	325	UGC5	1400	1400	1970	2080	1500	820	970	80	1050	1150	1250	465	450	92
1000	800	700	UCG10	1675	1675	2275	2415	1695	935	1085	80	1260	1405	1550	545	450	121
2000	1750	1650	UGC20	1720	1815	2340	2500	1900	1035	1205	200	1275	1420	1570	635	570	173

EURO PRESS PACK • Via M. Disma, 87 • 16042 Carasco (GE) ITALY
Tel. 0039 0185 35 271 • Fax 0039 0185 35 11 38

UGJ

TROLLEY JACKS

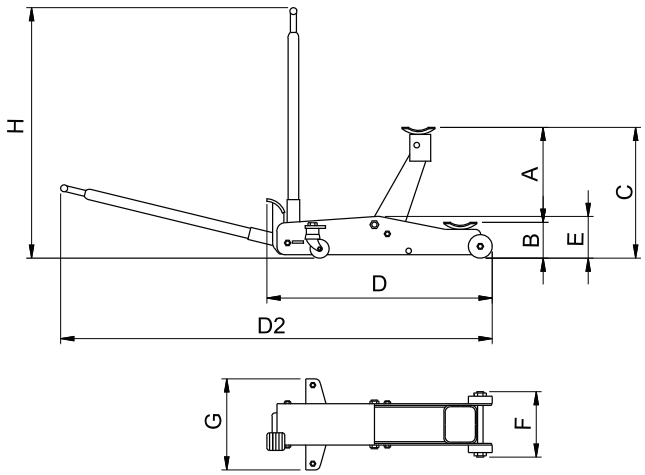

Capacity **2 - 10 t**

FEATURES

UGJ trolley jacks feature polyamide swivel castors for smooth and quiet operation. All models are fitted with a foot pedal for fast approach to the load.
In addition all models are fitted with a safety valve and stroke limiting device.
The 2 ton and 3 ton models have polyamide wheels whilst the 6 and 10 tonne models have cast wheels.

APPLICATIONS

These jacks are intended for use mainly in machine shops and garages to lift vehicles.

Check that the saddle is placed centrally under the load to be lifted.

SELECTION CHART

Capacity	MODEL	Dimensions mm									Weight
t		A	B	C	D	D2	E	F	G	H	kg
2	UGJ2	365	125	490	900	1885	165	245	360	990	34
3	UGJ3	380	145	525	1220	2215	190	250	350	1100	52
6	UGJ6	380	195	575	1300	2300	220	300	425	1100	82
10	UGJ10	380	195	575	1600	2600	260	345	425	1100	111

EURO PRESS PACK • Via M. Disma, 87 • 16042 Carasco (GE) ITALY
Tel. 0039 0185 35 271 • Fax 0039 0185 35 11 38

HYDRAULIC LIFTING TABLE

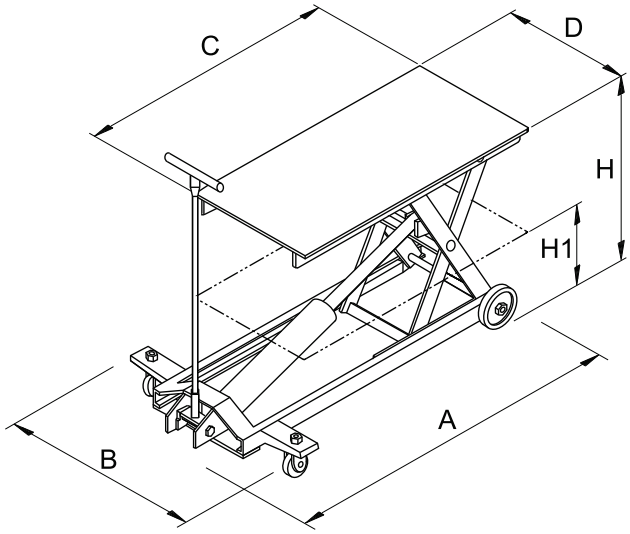

Capacity **2 t**

FEATURES

The UGT hydraulic lifting table has been designed to lift loads of up to 2 tonne. The lifting height of 880 mm enables the operator to work in a very comfortable position. The table can be locked mechanically by safety pins at three different positions.
UGT tables are equipped with foot pedal for fast approach to the load.
The cylinder is fitted with a safety valve and stroke limitation device. The polyamide fixed and swivel wheels are quiet in operation, and do not cause damage to floors.

APPLICATIONS

In machine shops, garages, and a variety of industrial uses.

Use the foot pedal for a fast approach to the load.

SELECTION CHART

Capacity	MODEL	Dimensions mm						Weight
t		A	B	C	D	H	H1	kg
2	UGT2	1440	800	1060	540	880	300	187

AUTOMOTIVE EQUIPMENT

EURO PRESS PACK • Via M. Disma, 87 • 16042 Carasco (GE) ITALY
Tel. 0039 0185 35 271 • Fax 0039 0185 35 11 38

UMB

HYDRAULIC BOTTLE JACKS

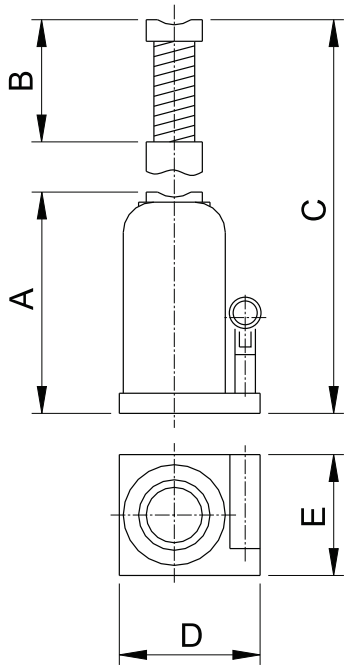

- Capacity **3 - 50 t**
- Stroke **150 mm**

Follow our safety rules.
See Useful pages. **p. 126**

FEATURES

UMB bottle jacks are produced with a one piece base, cylinder and reservoir. This eliminates any potential leaks between the base and reservoir.
All jacks are supplied with a operating lever. 20, 30 and 50 tonne models have a carry handle for ease of transport.
All models can be used horizontally with the pumping unit below the cylinder. The seals are easily replaced cutting service time down to the minimum.
Jacks are fitted with a stroke limiting device and safety valves

APPLICATIONS

These jacks are ideal for a variety of lifting or pushing jobs and can be used in many different industries.

SELECTION CHART

Capacity	Stroke	MODEL	Dimensions mm							Weight
t	mm		A	B	C	D	E	F	G	kg
3	150	UMB3N150	210	65	425	116	95	23.5	24	4,2
5		UMB5N150	212	75	437	123	95	29	29	5,0
8		UMB8N150	219		444	138	95	38	32.8	5,5
10		UMB10N150	219		444	142	95	38	37.3	6,5
12		UMB12N150	226		451	153	112	44	40.8	8,0
15		UMB15N150	228		453	163	112	44	44.6	9,0
20		UMB20N150	234		459	171	127	58	50.9	11,0
25		UMB25N150	240		465	196	142	65	54.4	14,3
30		UMB30N150	242		467	196	142	65	57.6	14,8
50		UMB50N150	252	-	402	230	180	-	80	28,8

EURO PRESS PACK • Via M. Disma, 87 • 16042 Carasco (GE) ITALY
Tel. 0039 0185 35 271 • Fax 0039 0185 35 11 38

EUROPRESS SPECIAL PRODUCTS

LIFTINGS

Lifting and precision levelling of the suspended floors during rebuilding works on the Campione d'Italia Casino. (Campione d'Italia 2003)

Levelling of the central bay of a road bridge with high tonnage cylinders with safety nut, CGG series. (Italy, Pescara 2010)

Lifting of a cylindrical shell used to build a reactor for the oil sector. Cylinders have been operated by a Split Flow power pack.

SYNCHRONIZED LIFTINGS

Synchronous lifting of mine digger's cabin P&H 4100 and P&H 2800 for periodic maintenance on cabin's thrust block and turntable. (Perù, December 2002)

Double effect aluminium telescopic cylinders and Split Flow power pack for the synchronized lifting of military vehicles for the upkeep of tracks.

Synchronous lifting on a viaduct of the Piacenza - Brescia motorway in Italy to replace antivibrating bearings, with traffic being undisturbed. (Italy, Ponte Sarmato 2009)

EURO PRESS PACK • Via M. Disma, 87 • 16042 Carasco (GE) ITALY
Tel. 0039 0185 35 271 • Fax 0039 0185 35 11 38

LOAD TESTS

Resistance and inflexion tests carried out on slabs or beams by using single or double effect EUROPRESS cylinders.

Strengthening of a motorway viaduct with a test on a 1000 mm diameter cement pile with an induced load of about 700 ton. (Italy, Piacenza 2008)

Load tests made on a cut off wall in the bearing structure of a buildings foundations.

Introduction of "mega piles" for consolidation operation following the foundation collapse of a heavy cemetery building. (Italy 2010)

ALIGNMENT SYSTEMS

Alignment system made up of special CGG series cylinders for the particles detector at the end of the new LHC accelerator ring. (CERN Geneva, activity starting in 2007)

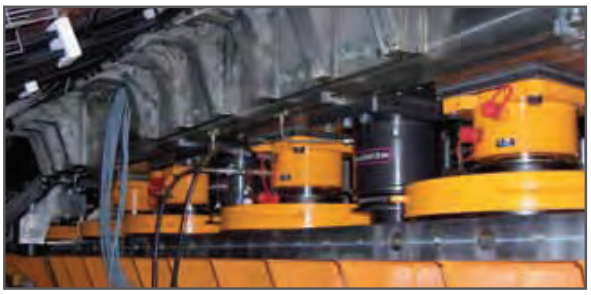

Foundations of one of the 30 aeolian 30 MW generators installed in the North Sea and levelled with 6 CGS50N100 working at a depth of 10-15 metres under water.

EURO PRESS PACK • Via M. Disma, 87 • 16042 Carasco (GE) ITALY
Tel. 0039 0185 35 271 • Fax 0039 0185 35 11 38

EUROPRESS SPECIAL PRODUCTS

PULLING

Special CMF series cylinders, mounted on the pulling equipment of diesel engine injectors

RERAILING OF RAILWAY CARRIAGES

Rerailing of railway carriages. This system allows the displacement of derailed carriages back onto the rails by using telescopic double effect EUROPRESS cylinders.

CRIMPING

Some of the special crimping tools projected and manufactured from EUROPRESS.

PRODUCTS

The "Trolley" solution was born from the need to have a modular and integrated system, easy to handle, and designed to be used safely. It is possible to mount on it a cylinder with tonnage according to customer preference starting from 100 ton. It is equipped with thick and large wheels to make sliding easy also for loose surfaces, and with a power pack with remote control to operate the cylinder from a safety distance.
The handle design has been studied to have a perfect balance of the whole tool.

High tonnage cylinders with retractable wheels to make handling easier. They are oil return cylinders, equipped with safety nut, integrated tilt saddle, gauge and pilot check valve to operate safely.

EURO PRESS PACK • Via M. Disma, 87 • 16042 Carasco (GE) ITALY
Tel. 0039 0185 35 271 • Fax 0039 0185 35 11 38

USEFUL PAGES

In the following pages you'll find information and advise concerning the safe use and the correct selection of your EUROPRESS High-pressure Hydraulic Equipment.
Please refer to Sections **How to choose a cylinder** (page 9), **How to choose a pump** (page 44) and **Components of an hydraulic system** (page 46). We hope these pages are helpful but should you require more information, our Technical Department is at your disposal to study special projects or applications to provide a cost effective and convenient solution.

BASICS FOR HYDRAULIC CALCULATIONS

The calculation examples given serve as a basis for the use of hydraulic systems.

1. FORCE OF AN HYDRAULIC CYLINDER

The force of an hydraulic cylinder results from the pressure in the cylinder, p, on the piston of the cylinder

The formula: **F**(kg) = **p**(bar). **A**(cm²) [being = $\frac{10N.m}{s^2}$]
means:
F = force acting on the cylinder in kg
p = operating pressure in bar
A = the cylinder effective area in cm2 which is calculated from the piston diameter:

$$\mathbf{A}(cm^2) = \frac{d(mm)^2.\pi}{400} \quad (\pi = 3{,}1416)$$

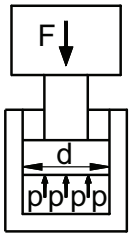

EXAMPLE 1:
A **CGG100P50** cylinder is required to lift a load of 72 t.
What operating pressure is required?

$$\mathbf{A}(cm^2) = \frac{d(mm)^2.\pi}{400}$$

with piston diameter **CGS100P50**

→ **d** = 130 mm

→ **A** = $\frac{130^2.3{,}1416}{400}$ cm² = 132,7 cm²

the result of **F**(kg) = **p**(bar). **A**(cm²) after its inversion, is

$$\mathbf{p}(bar) = \frac{F(Kg)}{A(cm)^2} \text{ being } F = 72\ t = 72.000\ kg$$

→ **p** = $\frac{72.000}{132{,}7}$ bar = 542 bar.

The required operating system is 542 bar.

EXAMPLE 2:
A **CMI10N100** cylinder lifts a load; the gauge shows an operating pressure of 520 bar. What is the weight of the load?

$$A(cm^2) = \frac{d(mm)^2.\pi}{400}$$

With piston diameter **CMI10N100**
→ **d** = 45 mm

→ **A** = $\frac{45^2.3{,}1416}{400}$ cm² = 15,9 cm²

F(kg) = **p**(bar). **A**(cm²)
F = (520 . 15,9) kg = 8270 kg

The lifted load has a weight of 8270 kg.

2. ACTUATING PUMPS

When an hydraulic cylinder is operated by a hand pump, the cylinder plunger moves a certain distance per pump actuation. This distance depends on the cylinders effective area and on the pump's oil flow per stroke. When two-speed hand pumps are used, the low pressure oil flow **VLP** applies for cylinder movements without load and the high pressure oil flow **VHP** applies for cylinder movements with loads.

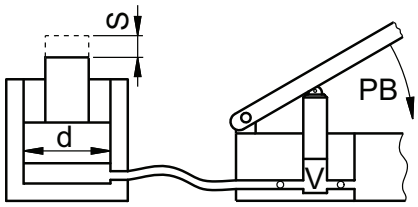

The formula: **S**(mm) = $\frac{V(cm^3).10}{A(cm^2)}$

means:
S = cylinder's shift in mm
V = pump's oil flow per stroke in cm³
A = cylinder area in cm².

EXAMPLE 3:
A **CMI10N100** cylinder is operated by a **PL131** hand pump. What is the distance the supported load moves per pump actuating?

→ **A** = 15,9 cm² (see example 2)

EURO PRESS PACK • Via M. Disma, 87 • 16042 Carasco (GE) ITALY
Tel. 0039 0185 35 271 • Fax 0039 0185 35 11 38

$$\mathbf{S}(mm) = \frac{V(cm^3).10}{A(cm)^2}$$

PL131 having an oil flow per stroke of

→ **V** =3,4 cm³

→ $\mathbf{S} = \frac{3,5.10}{15,9}$ mm = 2,2 mm

The supported load moves 2,2 mm per pump full stroke actuation.

EXAMPLE 4:
A **CGG100P50** (stroke S = 50mm) is operated by a **PL162** hand pump. A non-load stroke of L = 30 mm has to be accounted for. How many pump actuations **PB** are necessary to extend the cylinder completely?

→ **A** = 132,7 cm² (See example 1)

Meaning for the non-load stroke $\mathbf{S}_{BP}$ (mm) = $\frac{V_{BP}(cm^3).10}{A(cm^2)}$

PL162 having a LP-oil flow per stroke of

→ $\mathbf{V}_{BP}$ = 32cm³

→ $\mathbf{S}_{BP} = \frac{32.10}{132,7}$ mm = 2,4 mm

The number of pump actuations in the non –load mode is calculated by way of non-load stroke divided by the movement covered per pump actuation:

$\mathbf{PB}_{BP} = \frac{L(mm)}{S_{BP}(mm)} = \frac{30}{2,4}$ = 13 pump actuations

Meaning for stroke under load: $\mathbf{S}_{AP}$ (mm) = $\frac{V_{AP}(cm^3).10}{A(cm^2)}$

PL162 having a LP-oil flow per stroke of

→ $\mathbf{V}_{AP}$ = 3 cm³

→ $\mathbf{S}_{AP} = \frac{3.10}{132,7}$ mm = 0,23 mm

The number of pump actuations under load is calculated from the remaining stroke divided by the distance covered per pump actuation:

$\mathbf{PB}_{AP} = \frac{H(mm) - L(mm)}{S_{AP}(mm)} = \frac{50-30}{0,23}$ = 87 pump actuations

In total = $\mathbf{PB}_{BP}$ + $\mathbf{PB}_{AP}$ = 13 + 87 = **100 pump actuations.**

3. SPEED OF EXTENDING

The time an hydraulic cylinder needs for extending, being operated by an electric pump, depends on the cylinder effective area and on the oil flow of the electric pump. When two-speed pumps are used, the LP-oil volume $\mathbf{Q}_{LP}$ for cylinder movements without load and the HP-oil volume $\mathbf{Q}_{HP}$ for cylinder movements with load is to be put in.

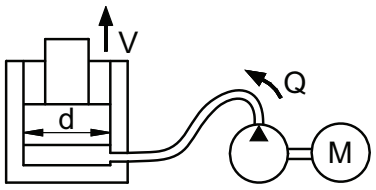

The Formula: $\mathbf{v}(mm/s) = \frac{Q(l/min).166,67}{A(cm^2)}$

means:
v = speed of the cylinder in mm/s
Q = the oil flow of the pump in l/min
A = cylinder area in cm2

EXAMPLE 5:
A **CGG100P50** is operated by an electric pump **MEF10M31**. What is the cylinder's speed of full extension?

→ **A** = 132,7 cm² (see example 1)

$$\mathbf{v}(mm/s) = \frac{Q(l/min).166,67}{A(cm^2)}$$

having an oil flow **MEF10M31** | **Q** = 1,8 l/min

→ $\mathbf{v} = \frac{1,8.166,67}{132,7}$ mm/s = 2,2 mm/s.

The cylinder's speed of full extension is 2,2 mm/s.

UNITS OF MEASUREMENT

The details given in the present catalogue are expressed in the units of measurements of the international System currently in force.
The table below facilitates conversion into a commonly used equivalent systems of measurements.

1 bar = 0,1 MPa
1 bar = 10 N/cm²
1 bar = 1,0197 kgf/cm²
1 bar = 14,5 psi
1 MPa = 10 bar
1 N/cm² = 0,1 bar
1 kgf/cm² = 0,9806 bar
1 psi = 0,0689 bar

1 kN = 0,10197 t
1 N = 0,10197 kgf
1 N = 0,2248 lbf
1 ton (short) = 907,18 kg
1 ton (short) = 2000 lb

1 kW = 1,359 HP
1 HP = 0,735 kW

1 Nm = 0,10197 kgf·m
1 lbf·ft = 0,13825 kgf·m

1 gal (UK) = 4,546 l
1 gal (US) = 3,785 l
1 in³ = 16,387 cm³
1 in² = 6,451 cm²
1 in = 25,4 mm

SAFETY INSTRUCTIONS

MAINTENANCE AND USE INSTRUCTION

CYLINDERS

Always provide a solid support for the entire cylinder base area.

Make sure that the two areas on which the cylinder develop its force are sufficiently strong and non-deformable.

Never use cylinders without the saddle, as they distribute the load evenly and prevent damage to the piston.

The cylinder saddle must be in contact with the load and the cylinder movement must be in axis with the load movement.

Avoid any lifting of off centred loads which could damage the cylinder. The use of a tilt saddle allows a misalignment of the load ± 5°.

To hold the load lifted use a needle or a pilot check valve in addition to the pump or power pack valve. In case the load has to be held over a long period use a cylinder with a safety lock nut.

Never work near the load supported only by the hydraulics. The safety lock nut of the cylinders has to be continuously screwed down onto the body of the cylinder during the lifting operation.

Never place any part of your body under the load and for additional safety support the load mechanically.

Keep your hydraulic equipment away from temperatures above 65°C (150°F).

EPP components have been treated against corrosion. Nevertheless in case of operations in very humid areas or marine environments, please contact our Technical Department for more information.

SAFETY INSTRUCTIONS

Avoid retracting the piston too quickly if it is still under load. A sudden retraction creates pressure shocks in the hydraulic circuit. Slowly turn the hand pump and power pack release valve. When 4/3 valves are used in a maintained position it is advised to insert a needle valve between the directional valve and the cylinder in order to have a controlled lowering speed of the load.

Do not use any component with a load exceeding their nominal capacity. Always use a gauge to check the circuit pressure or tonnage.

HYDRAULIC HOSES

Always keep the hoses away from the area under the load.

Do not lift any hydraulic component by the hose

Never exceed the maximum working pressure indicated for any cylinder range.

EUROPRESS CYLINDERS HAVE BEEN DESIGNED WITH GREAT SAFETY MARGINS. NEVERTHELESS TO AVOID TO UNDERVALUATE THE LOAD TO BE LIFTED, ALWAYS CHOOSE A CYLINDER WITH AT LEAST 20% MORE CAPACITY THAN THE REQUESTED LOAD.

Before connecting, clean the couplers properly and to avoid contamination use the dust caps when not connected.

Only disconnect the cylinder from the pump when the rod has fully retracted.

Do not kink hoses. The bending radius must not be under 70 mm. Do not walk over or drop heavy objects on them.

USEFUL PAGES

SAFETY INSTRUCTIONS

PUMPS

Never refill the pump above indicated level and whilst the pump is connected to a partially extended cylinder.

We recommend to use EUROPRESS hydraulic oil only. Its viscosity and lubrification features guarantee the highest operational efficiency and a longer life of the equipment. The hydraulic oil temperature must not exceed 60°C (140° F). To operate at higher temperatures or with different fluids please contact our Technical Department.

Do not use any extension on the pump handle. Operate hand pumps is easy, when properly handled.

We recommend to read carefully EUROPRESS safety instructions before use.

Use your fingers to close the release valve, a tool could cause damage.

Use EUROPRESS hydraulic oil only, to keep the seals intact.

This catalogue has been prepared with as much care as possible. All data and information have been checked and verified before printing. In spite of this and due to the continuous improvement and evolution of the EUROPRESS production range, we take the right to modify or abolish any products from this catalogue. Consequently information here included could vary with no prior advise.

Small differences could arise due to production tolerances.
Please contact EUROPRESS, if dimensions are critical.

Integral or partial use and reproduction of this catalogue is prohibited (drawings, pictures, texts, photographs, logos) unless written authorised.

EURO PRESS PACK • Via M. Disma, 87 • 16042 Carasco (GE) ITALY
Tel. 0039 0185 35 271 • Fax 0039 0185 35 11 38

GUARANTEE

QUALITY CERTIFICATION

TAll EUROPRESS products are covered by a one year guarantee against any defects in materials or workmanship. This guarantee does not cover normal wear and tear, improper use or any applications not in compliance with our recommended instructions, or where the equipment is used with unsuitable fluids, modifications and/or alterations (including those resulting from repair or attempted repair by persons not authorized by EURO PRESS PACK), or damage caused by transportation.
To report any flaw, defect, non conformity, and/or to claim action under this guarantee, the Customer shall inform EURO PRESS PACK in writing within 5 days after receipt of the goods, or in case of hidden defect, within 5 days after such defect has been discovered. Before returning the goods to EURO PRESS PACK for possible remedy under guarantee, the purchaser shall have received EURO PRESS PACK's authorization . If EURO PRESS PACK is firmly convinced that its own product is defective, EURO PRESS PACK will provide free of charge for repair or replacement. The transport costs to and from EURO PRESS PACK are at the customer's charge.

If the intervention of EURO PRESS PACK personnel or of our authorized distributors is requested on the site for installation of the replaced items (provided it is ascertained that they are covered by this guarantee) the costs of transfer of such personnel, their travelling hours and travel expenses are at the Customer's charge, whereas only the actual working hours will be at the charge of EURO PRESS PACK or of its authorized distributor.

THE ABOVE GUARANTEE IS THE ONLY GUARANTEE ACKNOWLEDGED AND RECOGNIZED BY EURO PRESS PACK AND IT REPLACES ANY AND ALL OTHER EXPLICIT OR IMPLICIT GUARANTEES REGARDING THE PRODUCTS MANUFACTURED AND MARKETED BY EURO PRESS PACK, AS TO THEIR MARKETABILITY OR SUITABILITY FOR SPECIFIC APPLICATIONS.

IT IS HEREBY EXPRESSLY STATED THAT ANY CHARGES AND/OR LIABILITY OF EURO PRESS PACK ARE EXCLUDED REGARDING:
- ANY ACCIDENTAL OR CONSEQUENTIAL DAMAGES CAUSED BY DEFECTIVE OR NON CONFORMING PRODUCTS, BY NEGLIGENCE OR OTHERWISE.
- DAMAGE DUE TO OTHER CAUSES INCLUDING, BUT NOT LIMITED TO NEGLIGENCE OF EURO PRESS PACK
- ANY OTHER OBLIGATION OR LIABILITY DERIVING FROM BREACH OF CONTRACT OR OF GUARANTEE.

THIS GUARANTEE WILL NOT BE EFFECTIVE IN CASE OF EVEN PARTIAL DEFAULT IN PAYMENT FOR THE SUPPLIED GOODS, INCLUDING INVOICES FOR TECHNICAL ASSISTANCE SERVICES.

The maximum amount payable by EURO PRESS PACK for damages will at all events be limited to the actually paid purchase price and shall therefore never exceed this price.

Validity may 2001

QUALITY

QUALITY CERTIFICATION

Euro Press Pack has always been a Company very attentive to quality norms.

This means that both the design of our products than their manufacturing are planned considering the Good Manufacturing Practice . All necessary controls are made to grant our customers the highest possible quality standard. In this way the final product is produced and checked according to the defined procedures and this assures that the quality system is efficient, controlled and proved.

QUALITY SYSTEM CERTIFICATE ISO 9001:2008

Certification for design, manufacturing, marketing and repair of high pressure components

ENVIRONMENTAL SYSTEM CERTIFICATE ISO14001:2004

System certification for design and manufacture, through the various step of cutting, mechanical machining, surface treatments, painting, assembly, testing, packing and dispatch, sales and service of high pressure hydraulic fluid components.

ANSI B30.1

All cylinders comply to the standard laid down by the American National Standards institute (apart from CGS#P#, CGG#P#, and CGR cylinders).

EN 60204-1

The electric parts of the machines are made according the standard of EN 60204-1

SAE 100R10

The 700 bar hoses exceed this norm.

CE DIRECTIVES 2006/42/CE – 2006/95/CE – 2004/108/CE

All our power packs conform the CE norm on the machine directive, low tension and electromagnetic compatibility.

CE mark.

All EUROPRESS products meet the European safety directives.

Euro Press Pack

E.P.P. EURO PRESS PACK SpA

Via M. Disma, 87 - 16042 Carasco Genova - Italy
Tel. 00 39 0185 35271 - Fax 00 39 0185 351138
e-mail: sales@europresspack.it
www.europresspack.com

EUROPRESS DEUTSCHLAND GmbH

D - 90427 NÜRNBERG - Brettergartenstr., 14
Tel. 00 49 911 32483-0 - Fax 0049 911 32483-33
e-mail: info@europress-deutschland.de
www.europresspack.com

EPP MAGNUS Ltd

NORWICH NR6 6AY - UK - 7, Burton Close
Tel. 00 44 1603 400861 - Fax 00 44 1603 788496
e-mail: welcome@magnus-int.co.uk
www.europresspack.com

pisonicomunicazioni.it