Jarocińska Fabryka Obrabiarek S.A.

SMG
Swedish Machine Group

FF Series

Jarocin Machinetools Factory Shares Company
PL 63-200 Jarocin, Zaciszna 14, Tel. +48 62 747 26 01, Fax +48 62 747 27 15
www.jafo.com.pl, e-mail: jafo@jafo.com.pl

Special equipment - options

- Universal dividing head FJNb250
- Vertical and askew milling head FSx
- Universal 2 plane swivel milling head FSz
- Slotting attachment FSj
- Indexing round table FMb250
- Driver mandrel FFt40 ISO taper for heads
- Plain machine vice 125mm jaws width
- Swivelling base machine vice 125mm jaws width
- Inclinable machine vice 125mm jaws width
- Optic electronical digital read out kit with linear scales
- Quick hydraulic tool clamping system for vertical spindle (J2 head)
- Foundation bolts or vibration absorbing pads for machine

Standard equipment

- Splindle splash guard
- Coolant splash tray
- Overarm slide out crank
- Milling arbor support steady
- Machine lamp
- Stepless control of spindle rotational speed
- Stepless control of feeds speed
- Mechanical and mobile documentation
- Set of service spanners

FWF32/FWF32J2, FWF32JU2 /FYF32J2, FYF32JU2

Technical data

TECHNICAL DATA	UNIT	FWF32	FWF32J2 / FWF32JU2	FYF32J2 / FYF32JU2
TABLE:				
Table working area	mm	320x1300	320x1300	320x1300
T-slots (number-width-spacing)	mm	5-18-63	5-18-63	5-18-63
MAXIMAL FEED OF THE TABLE:				
Lenghtwise	mm	850	850	850
Crosswise	mm	340	340	340
Vertical	mm	500	500	500
RAPID FEEDS:				
Lenghtwise	mm/min	1700	1700	1700
Crosswise	mm/min	1700	1700	1700
Vertical	mm/min	700	700	700
RANGE OF FEEDS				
Number of degrees for feeds		stepless	stepless	stepless
Lenghtwise	mm/min	20÷1700	20÷1700	20÷1700
Crosswise	mm/min	20÷1700	20÷1700	20÷1700
Vertical	mm/min	20÷700	20÷700	20÷700
SPINDLE:				
Horizontal spindle tip	ISO	40	40	-
Number of degrees for horizontal spindle		stepless	stepless	-
Ranges of horizontal spindle revolutions	rpm	45÷2600	45÷2600	-
Vertical spindle tip	ISO	-	40	40
Number of degrees for vertical spindle		-	stepless	stepless
Ranges of vertical spindle revolutions	rpm	-	45÷3200 (J2), 30÷2000 (JU2)	45÷3200 (J2), 30÷2000 (JU2)
Head swivel angle		-	±45° (J2), -30°÷120°/±90° (JU2)	
Quill slide out stroke	mm	-	75/100	75/100
MOTORS:				
Horizontal spindle	kW	5,5	5,5	-
Vertical spindle	kW	-	5,5	5,5
Feeds	kW	1,1	1,1	1,1
Coolant small pumps	kW	0,09	0,09	0,09
Machine weight	kg	2350	2800	2500
Max. workpiece weight with tooling ficture	kg	300	300	300
Milling machine overall dimensions (LxWxH)	mm	1900x2500x2000	1900x2500x2200	1900x2500x2200
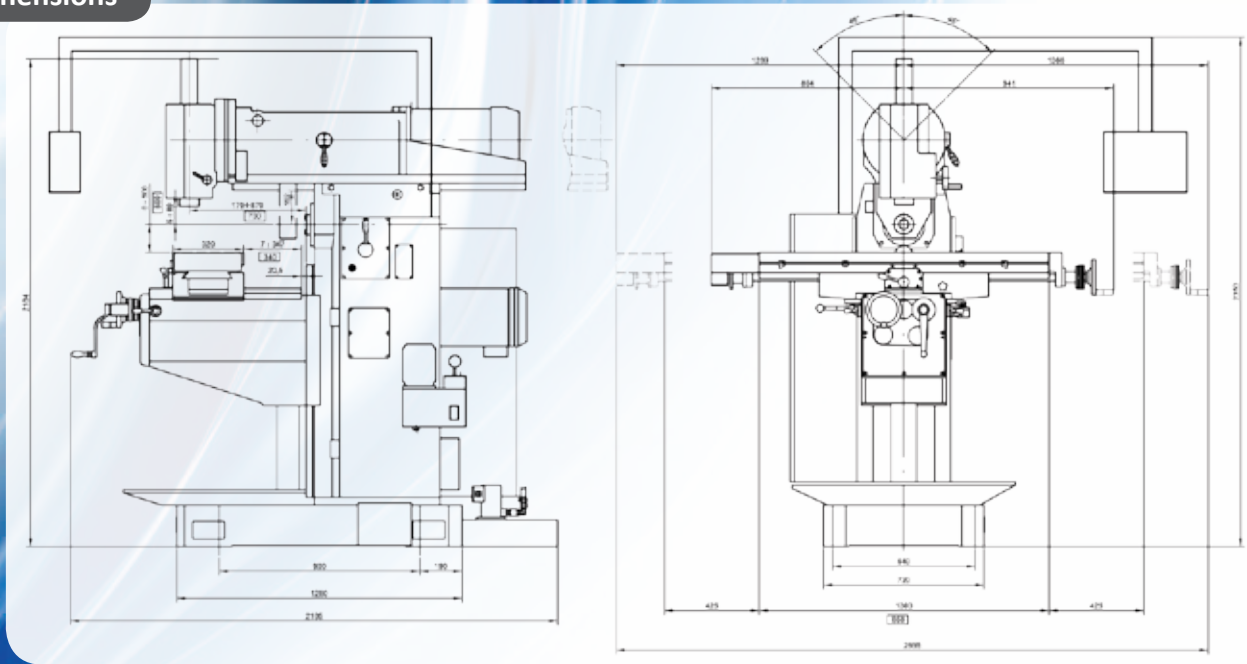
Overall dimensions