iTec

SENTRALGASSUTSTYR
SPECTROLAB

VERSJON 2.0. 2019

www.itec.as

FORORD

iTec AS leverer komplette maskinløsninger for plater, rør og profiler, samt gassutstyr, og har de siste 20 år vært en ledende leverandør til norsk industri.

iTec leverer gassutstyr fra den tyske høykvalitetsleverandøren Spectron. I samarbeid med leverandør kan vi levere gassutstyr til ulike industrier; medisinsk, farmasøytisk, prosess, akvakultur og næringsmiddel applikasjoner.

Spectron har en bred produktportefølje som inneholder komponenter for alle typer komprimerte gasser og bruksområder.

Denne katalogen inneholder teknisk spesifikasjon på gassutstyr i forkrommet utførelse (SpectroLab).

Generell informasjon:

Inngangstrykk	: fra 0 - 300 bar
Utgangstrykk	: fra 0 - 200 bar
Max volumstrøm gass	: 50 m^3/t
Lekkasjerate	: $1x10^{-8}$ mbar l/s

Alle produktene tilfredsstiller de normer og lovpålagte krav som gjelder for gass og trykkpåkjent utstyr.

iTec leverer komplette gass distribusjonsløsninger, med tilhørende prosjektering/ dimensjonering og dokumenterer jobben i henhold til kundens krav.

Det tas forbehold om endringer på produktenes visuelle utforming vist i denne katalogen.

Ta kontakt med iTec for nærmere informasjon om prosjektering/ dimensjonering, priser, normer og lovpålagte krav, installasjon, service og preventivt vedlikehold av dine gassystemer.

Med vennlig hilsen

Daniel R. Persen
Salgssjef Gassutstyr

ÆRLIG
INTERESSERT
PRESIS

INNHOLD

FORORD....02
LINJEREGULATOR (LINE PRESSURE REGULATORS)....04
LM51-2....04
LM51-4....06
LM51-6....08
LM52exact-2....10
LM52exact-4....12
LM52exact-6....14
LM53-2....16
LM53-6....18
LM61/LM62....20
LM71....22
FLASKEREGULATOR (CYLINDER PRESSURE REGULATORS)....25
FM45....25
FM51....27
FM52exact....29
FM53....31
FM61/ FM62....33
PANELREGULATOR (PANEL PRESSURE REGULATORS)....36
PM51-2....36
PM51-4....38
PM51-6....40
PM52exact-2....42
PM52exact-4....44
PM52exact-6....46
PM53-2....48
PM53-6....50
GASSENTRAL (PRESSURE CONTROL PANELS)....53
BM55-1....53
BM55-2....55
BM56-1....57
BM56-2....59
BM55-2U....61
BM56-2U....63
BM55-2A....65
BM50-1+2....66
BM55+56-E....67
BM65-1....69
BM66-1....71
BM65-2....73
BM65-2U....75
BM65-2L....77
BM65-E....79
BM65-AC....81
BM65-2A-AC....83
VENTILER (VALVES)....86
MV3-M....86
DVM....88
V6M-3....90
UTTAKSPOST (TAPPING POINTS)....92
EM55....92
EM65....94
EM15/EE15....96
EM55 (Spectrolab plus)....109
EM65-AC....119
TILBEHØR (ACCESSORIES)....120
Flowmeter FLM 32....120
Pigtails og Braketter....122
Høytrykksslanger HDS....124

LINJEREGULATOR
LM51-2

Line pressure regulator LM51-2

Line pressure regulator LM51-2

Specifications

- SPECTROLAB-components guarantee maximum quality by using high grade materials and a quality assurance program acc. to ISO 9001.
- All parts in the gas wetted surface area are cleaned in an ultrasonic cleaning system (CFC-free) with the special Cleaning process SPECTRO-CLEAN® and then baked out.
- SPECTROLAB-components undergo a 100% function- and Helium-leak-test.

Product features

- Brass (chrome plated) line pressure regulator
- For non-corrosive gases and gas mixtures up to quality 6.0
- 2 ports for flexible and individual configuration
- Very stable outlet pressure
- Suitable for inlet pressures up to 300 bar
- Max. outlet pressures 1,5 up to 200 bar *
- Metal-to-metal seal to atmosphere
- Suitable for ECD-applications
- Pressure regulator can be evacuated
- Inlet filter
- Approved for use with oxygen
- Simple outlet pressure limitation by handwheel
- Easy to install
- New laboratory-style design
- Ergonomically designed

* 1,5 / 4 bar only for inlet pressure ≤ 50 bar

Technical data

Type	single-stage
Inlet pressure P_1	max. 300 bar
Outlet pressure P_2	1,5 / 4 bar (P_1 ≤ 50 bar) 10 / 20 / 50 / 100 / 200 bar (P_1 > 50 bar)
Materials	
Body regulator:	chrome plated brass
Valve seat:	PA
Diaphragm:	Hastelloy C276
Filter:	Sintered SS 316L
In- and outlets	1/4" NPT-F
Temperature range	-30°C to +60°C
Leak rate (to atmosphere)	$1x10^{-8}$ mbar l/s He
(via seat)	$1x10^{-6}$ mbar l/s He
Flow capacitiy	C_V=0.15
Weight	1.0 kg

Dimensions
LM51-2

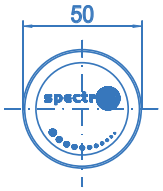

Side view

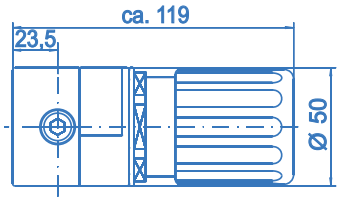

ÆRLIG
INTERESSERT
PRESIS

Line pressure regulator LM51-2

Ordering information:
Line pressure regulator LM51-2

In- / outlets

CM 1/4	- 1/8" / 1/4" / 1/2" - OD compression fitting (brass)
CM 6	- 3 / 6 / 8 / 10 / 12 mm compression fitting (brass)
CE 1/4	- 1/8" / 1/4" / 1/2" - OD compression fitting (stainless steel)
CE 6	- 3 / 6 / 8 / 10 / 12 mm compression fitting (stainless steel)
0	- 1/4"-NPT-F (port only)

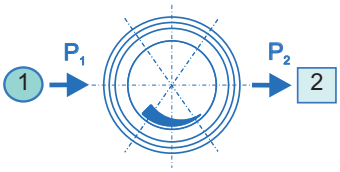

port selection

LM51 - 2 - 300 - 10 - 1 - 2 - N2

Inlet pressure P_1

10	- max. 10 bar	100	- max. 100 bar
20	- max. 20 bar	200	- max. 200 bar
50	- max. 50 bar	300	- max. 300 bar

Outlet pressure P_2

1,5	- to 1,5 bar ($P_1 \leq 50$ bar)
4	- to 4 bar ($P_1 \leq 50$ bar)
10	- to 10 bar
20	- to 20 bar
50	- to 50 bar
100	- to 100 bar
200	- to 200 bar

Type of gas

Please specify type of gas (for selection of valve seat materials)

Ordering example:
LM51-2-300-10-CE6-CE6-N2

LINJEREGULATOR
LM51-4

Line pressure regulator LM51-4

Line regulator LM51-4

Specifications

- SPECTROLAB-components guarantee maximum quality by using high grade materials and a quality assurance program acc. to ISO 9001.
- All parts in the gas wetted surface area are cleaned in an ultrasonic cleaning system (CFC-free) with the special Cleaning process SPECTRO-CLEAN® and then baked out.
- SPECTROLAB-components undergo a 100% function- and Helium-leak-test.

Product features

- Brass (chrome plated) line pressure regulator
- For non-corrosive gases and gas mixtures up to quality 6.0
- 4 ports for flexible and individual configuration
- Very stable outlet pressure
- Suitable for inlet pressures up to 300 bar
- Max. outlet pressures 1,5 up to 200 bar *
- Metal-to-metal seal to atmosphere
- Suitable for ECD-applications
- Pressure regulator can be evacuated
- Inlet filter
- Approved for use with oxygen
- Simple outlet pressure limitation by handwheel
- Easy to install
- New laboratory-style design
- Ergonomically designed

* 1,5 / 4 bar only for inlet pressure ≤ 50 bar

Technical data

Type	single-stage
Inlet pressure P_1	max. 300 bar
Outlet pressure P_2	1,5 / 4 bar (P_1 ≤ 50 bar) 10 / 20 / 50 / 100 / 200 bar (P_1 > 50 bar)
Materials	
Body regulator, relief valve:	chrome plated brass
Valve seat:	PA
Diaphragm:	Hastelloy C276
Filter:	Sintered SS 316L
In- and outlets	1/4" NPT-F
Temperature range	-30°C to +60°C
Leak rate (to atmosphere)	$1x10^{-8}$ mbar l/s He
(via seat)	$1x10^{-6}$ mbar l/s He
Pressure gauge	Safety pressure gauges ISO5171/Kl1.6/NG50
Flow capacitiy	C_V=0.15
Weight	1.0 kg

Dimensions
LM51-4

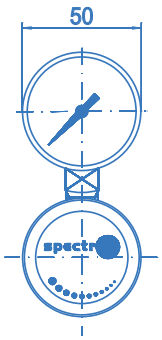

Side view

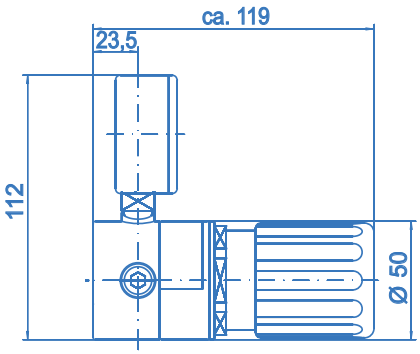

ÆRLIG
INTERESSERT
PRESIS

Line pressure regulator LM51-4

Ordering information:
Line regulator LM51-4

In- / outlets

CM 1/4	- 1/8" / 1/4" / 1/2" - OD compression fitting (brass)
CM 6	- 3 / 6 / 8 / 10 / 12 mm compression fitting (brass)
CE 1/4	- 1/8" / 1/4" / 1/2" - OD compression fitting (stainless steel)
CE 6	- 3 / 6 / 8 / 10 / 12 mm compression fitting (stainless steel)
B	- plug
A	- relief valve - 1/4"-18 NPT-F ($P_2 \leq 100$ bar)
K	- contact gauge
M	- pressure gauge
0	- 1/4"-NPT-F (port only)

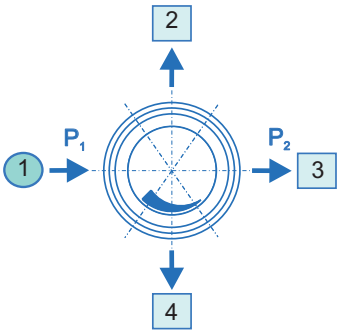

port selection

LM51 - 4 - 300 - 10 - 1 - 2 - 3 - 4 - N2

Inlet pressure P_1

10	- max. 10 bar	100	- max. 100 bar
20	- max. 20 bar	200	- max. 200 bar
50	- max. 50 bar	300	- max. 300 bar

Outlet pressure P_2

1,5	- to 1,5 bar ($P_1 \leq 50$ bar)
4	- to 4 bar ($P_1 \leq 50$ bar)
10	- to 10 bar
20	- to 20 bar
50	- to 50 bar
100	- to 100 bar
200	- to 200 bar

Type of gas

Please specify type of gas (for selection of valve seat materials)

Ordering example:
LM51-4-300-10-CE6-M-CE6-B-N2

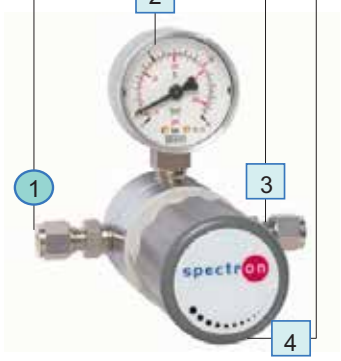

LINJEREGULATOR

LM51-6

Line pressure regulator LM51-6

Line regulator LM51-6

Specifications

- SPECTROLAB-components guarantee maximum quality by using high grade materials and a quality assurance program acc. to ISO 9001.
- All parts in the gas wetted surface area are cleaned in an ultrasonic cleaning system (CFC-free) with the special Cleaning process SPECTRO-CLEAN® and then baked out.
- SPECTROLAB-components undergo a 100% function- and Helium-leak-test.

Product features

- Brass (chrome plated) line pressure regulator
- For non-corrosive gases and gas mixtures up to quality 6.0
- 6 ports for flexible and individual configuration
- Extremly stable outlet pressure
- Suitable for inlet pressures up to 300 bar
- Max. outlet pressures 1,5 up to 200 bar *
- Metal-to-metal seal to atmosphere
- Suitable for ECD-applications
- Pressure regulator can be evacuated
- Inlet filter
- Approved for use with oxygen
- Simple outlet pressure limitation by handwheel
- Easy to install
- New laboratory-style design
- Ergonomically designed

* 1,5 / 4 bar only for inlet pressure ≤ 50 bar

Technical data

Type	single-stage
Inlet pressure P_1	max. 300 bar
Outlet pressure P_2	1,5 / 4 bar (P_1 ≤ 50 bar) 10 / 20 / 50 / 100 / 200 bar (P_1 > 50 bar)
Materials	
Body regulator, relief valve:	chrome plated brass
Valve seat:	PA
Diaphragm:	Hastelloy C276
Filter:	Sintered SS 316L
In- and outlets	1/4" NPT-F
Temperature range	-30°C to +60°C
Leak rate (to atmosphere)	$1x10^{-8}$ mbar l/s He
(via seat)	$1x10^{-6}$ mbar l/s He
Pressure gauge	Safety pressure gauges ISO5171/KI1.6/NG50
Flow capacitiy	C_V=0.15
Weight	1.1 kg

Dimensions
LM51-6

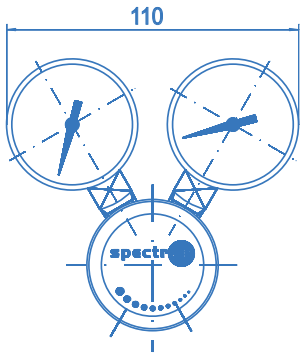

Side view

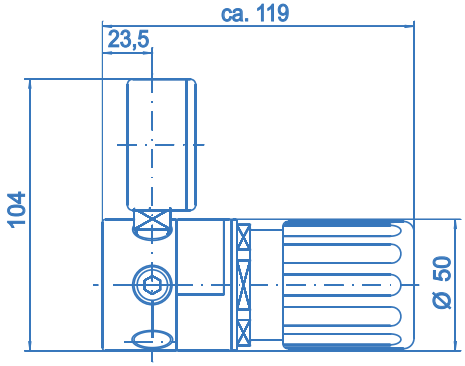

ÆRLIG
INTERESSERT
PRESIS

LINJEREGULATOR
LM51-6

Line pressure regulator LM51-6

Ordering information:
Line regulator LM51-6

In- / outlets

CM 1/4 - 1/8" / 1/4" / 1/2" - OD compression fitting (brass)
CM 6 - 3 / 6 / 8 / 10 / 12 mm compression fitting (brass)
CE 1/4 - 1/8" / 1/4" / 1/2" -OD compression fitting (stainless steel)
CE 6 - 3 / 6 / 8 / 10 / 12 mm compression fitting (stainless steel)
B - plug
A - relief valve - 1/4"-18 NPT-F ($P_2 \leq 100$ bar)
K - contact gauge
M - pressure gauge
0 - 1/4"-NPT-F (port only)

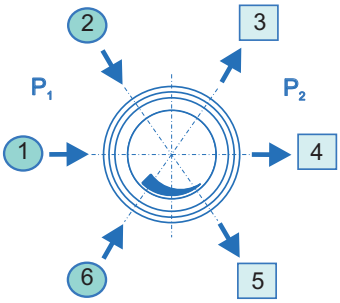

Inlet left: L

port selection

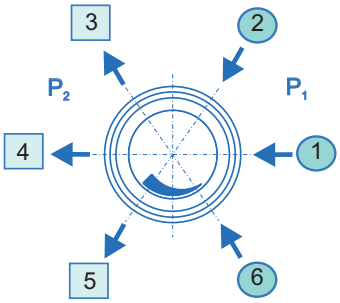

Inlet right: R

LM51 - 6 - L - 300 - 20 - 1 - 2 - 3 - 4 - 5 - 6 - N2

Inlet

L - left
R - right

Inlet pressure P_1

10 - max. 10 bar
20 - max. 20 bar
50 - max. 50 bar
100 - max. 100 bar
200 - max. 200 bar
300 - max. 300 bar

Outlet pressure P_2

1,5 - to 1,5 bar ($P_1 \leq 50$ bar)
4 - to 4 bar ($P_1 \leq 50$ bar)
10 - to 10 bar
20 - to 20 bar
50 - to 50 bar
100 - to 100 bar
200 - to 200 bar

Type of gas

Please specify type of gas (for selection of valve seat materials)

Ordering example:
LM51-6-L-20-10-CE6-M-M-CE6-B-0-N2

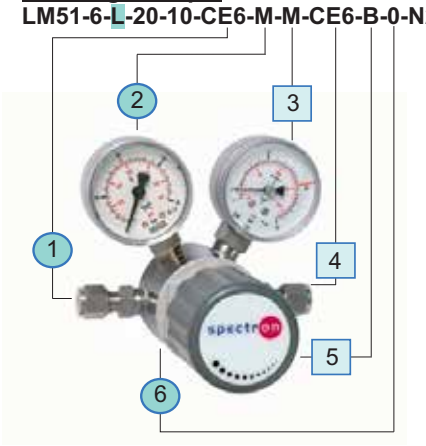

Ordering example:
LM51-6-R-200-10-0-M-M-CE1/8-A-B-Ar

LINJEREGULATOR

LM52^{exact}-2

Line regulator LM52^{exact}-2

Line regulator LM52^{exact}-2

Specifications

- SPECTROLAB-components guarantee maximum quality by using high grade materials and a quality assurance program acc. to ISO 9001.
- All parts in the gas wetted surface area are cleaned in an ultrasonic cleaning system (CFC-free) with the special Cleaning process SPECTRO-CLEAN® and then baked out.
- SPECTROLAB-components undergo a 100% function- and Helium-leak-test.

Product features

- Brass (chrome plated) line pressure regulator
- Extremly stable outlet pressure by applied extremly accurate Technology "exact" and anti- vibration device
- For non-corrosive gases and gas mixtures up to quality 6.0
- 2 ports for flexible and individual configuration
- Suitable for inlet pressures up to 300 bar
- Max. outlet pressures 1.5 up to 20 bar
- Light weight
- Compact design
- Metal-to-metal seal to atmosphere
- Suitable for ECD-applications
- Pressure regulator can be evacuated
- Central filter
- Approved for use with oxygen
- Simple outlet pressure limitation by handwheel
- Easy to install
- New laboratory-style design
- Ergonomically designed

exact = extremly accurate technology

Technical data

Type	single-stage EXACT
Inlet pressure P_1	max. 300 bar
Outlet pressure P_2	1.5 / 4 / 10 / 20 bar
Materials	
Body regulator:	chrome plated brass
Valve seat:	PA
Diaphragm:	Hastelloy C276
Soft goods:	EPDM
Filter:	Sintered SS 316L
In- and outlets	1/4" NPT female
Temperature range	-30°C to +60°C
Leak rate (to atmosphere)	$1x10^{-8}$ mbar l/s He
(via seat)	$1x10^{-6}$ mbar l/s He
Flow capacitiy	C_V=0.16
Weight	1.0 kg

Dimensions
LM52^{exact}-2

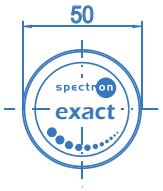

Side view

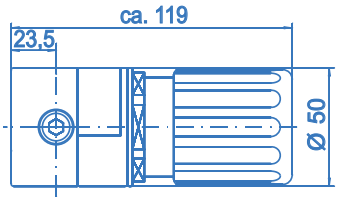

ÆRLIG
INTERESSERT
PRESIS

Line regulator LM52exact-2

Ordering information:
Line regulator LM52exact-2

In- / outlets

CM	1/4	- 1/8" / 1/4" / 1/2" - OD compression fitting (brass)
CM	6	- 3 / 6 / 8 / 10 / 12 mm compression fitting (brass)
CE	1/4	- 1/8" / 1/4" / 1/2" - OD compression fitting (stainless steel)
CE	6	- 3 / 6 / 8 / 10 / 12 mm compression fitting (stainless steel)
0		- 1/4"-NPT-F (port only)

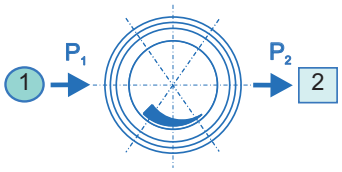

port selection

LM52 - 2 - 300 - 10 - 1 - 2 - N2

Inlet pressure P_1

100	- max. 100 bar
200	- max. 200 bar
300	- max. 300 bar

Outlet pressure P_2

1,5	- to 1.5 bar
4	- to 4 bar
10	- to 10 bar
20	- to 20 bar

Type of gas

Please specify type of gas (for selection of valve seat materials)

For inlet pressure up to 50 bar and outlet pressure of max. 1,5 or 4 bar please use M51

Ordering example:
LM52-2-300-10-CE6-CE6-N2

LINJEREGULATOR

LM52^{exact}-4

Line regulator LM52^{exact}-4

Line regulator
LM52^{exact}-4

Specifications

- SPECTROLAB-components guarantee maximum quality by using high grade materials and a quality assurance program acc. to ISO 9001.
- All parts in the gas wetted surface area are cleaned in an ultrasonic cleaning system (CFC-free) with the special Cleaning process SPECTRO-CLEAN® and then baked out.
- SPECTROLAB-components undergo a 100% function- and Helium-leak-test.

Product features

- Brass (chrome plated) line pressure regulator
- Extremly stable outlet pressure by applied extremly accurate Technology "exact" and anti- vibration device
- For non-corrosive gases and gas mixtures up to quality 6.0
- 4 ports for flexible and individual configuration
- Suitable for inlet pressures up to 300 bar
- Max. outlet pressures 1.5 up to 20 bar
- Light weight
- Compact design
- Metal-to-metal seal to atmosphere
- Suitable for ECD-applications
- Pressure regulator can be evacuated
- Central filter
- Approved for use with oxygen
- Simple outlet pressure limitation by handwheel
- Easy to install
- New laboratory-style design
- Ergonomically designed

exact = extremly accurate technology

Technical data

Type	single-stage EXACT
Inlet pressure P_1	max. 300 bar
Outlet pressure P_2	1.5 / 4 / 10 / 20 bar
Materials	
Body regulator, relief valve:	chrome plated brass
Valve seat:	PA
Diaphragm:	Hastelloy C276
Soft goods:	EPDM
Filter:	Sintered SS 316L
In- and outlets	1/4" NPT female
Temperature range	-30°C to +60°C
Leak rate (to atmosphere)	$1x10^{-8}$ mbar l/s He
(via seat)	$1x10^{-6}$ mbar l/s He
Pressure gauge	Safety pressure gauges ISO5171/KI1.6/NG50
Flow capacitiy	C_V=0.16
Weight	1.0 kg

Dimensions
LM52^{exact}-4

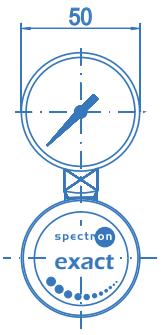

Side view

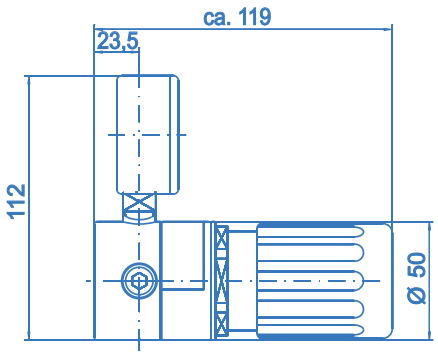

ÆRLIG
INTERESSERT
PRESIS

Line regulator LM52exact-4

Ordering information:
Line regulator LM52exact-4

In- / outlets

CM 1/4	- 1/8" / 1/4" / 1/2" - OD compression fitting (brass)
CM 6	- 3 / 6 / 8 / 10 / 12 mm compression fitting (brass)
CE 1/4	- 1/8" / 1/4" / 1/2" - OD compression fitting (stainless steel)
CE 6	- 3 / 6 / 8 / 10 / 12 mm compression fitting (stainless steel)
B	- plug
A	- relief valve - 1/4"-NPT-F
K	- contact gauge
M	- pressure gauge
0	- 1/4"-NPT-F (port only)

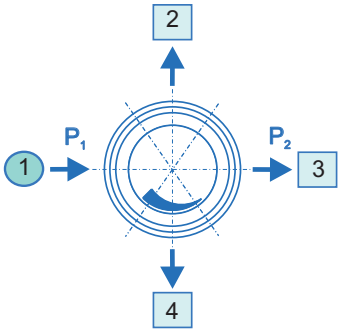

port selection

LM52 - 4 - 300 - 10 - 1 - 2 - 3 - 4 - N2

Inlet pressure P_1

100	- max. 100 bar
200	- max. 200 bar
300	- max. 300 bar

Outlet pressure P_2

1,5	- to 1.5 bar
4	- to 4 bar
10	- to 10 bar
20	- to 20 bar

Type of gas

Please specify type of gas (for selection of valve seat materials)

For inlet pressure up to 50 bar and outlet pressure of max. 1,5 or 4 bar please use M51

Ordering example:
LM52-4-300-10-CE6-M-CE6-B-N2

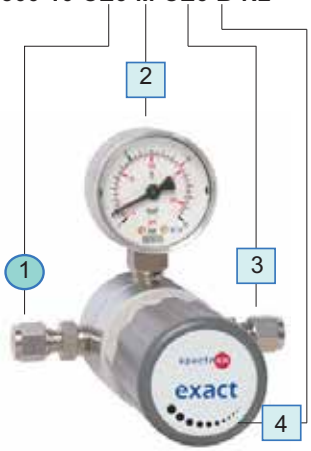

LINJEREGULATOR

LM52^{exact}-6

Line regulator LM52^{exact}-6

Line regulator
LM52^{exact}-6

Specifications

- SPECTROLAB-components guarantee maximum quality by using high grade materials and a quality assurance program acc. to ISO 9001.
- All parts in the gas wetted surface area are cleaned in an ultrasonic cleaning system (CFC-free) with the special Cleaning process SPECTRO-CLEAN® and then baked out.
- SPECTROLAB-components undergo a 100% function- and Helium-leak-test.

Product features

- Brass (chrome plated) line pressure regulator
- Extremly stable outlet pressure by applied extremly accurate Technology "exact" and anti- vibration device
- For non-corrosive gases and gas mixtures up to quality 6.0
- 6 ports for flexible and individual configuration
- Suitable for inlet pressures up to 300 bar
- Max. outlet pressures 1.5 up to 20 bar
- Light weight
- Compact design
- Metal-to-metal seal to atmosphere
- Suitable for ECD-applications
- Pressure regulator can be evacuated
- Central filter
- Approved for use with oxygen
- Simple outlet pressure limitation by handwheel
- Easy to install
- New laboratory-style design
- Ergonomically designed

exact = extremly accurate technology

Technical data

Type	single-stage EXACT
Inlet pressure P_1	max. 300 bar
Outlet pressure P_2	1.5 / 4 / 10 / 20 bar
Materials	
Body regulator, relief valve:	chrome plated brass
Valve seat:	PA
Diaphragm:	Hastelloy C276
Soft goods:	EPDM
Filter:	Sintered SS 316L
In- and outlets	1/4" NPT female
Temperature range	-30°C to +60°C
Leak rate (to atmosphere)	$1x10^{-8}$ mbar l/s He
(via seat)	$1x10^{-6}$ mbar l/s He
Pressure gauge	Safety pressure gauges ISO5171/KI1.6/NG50
Flow capacitiy	C_V=0.16
Weight	1.1 kg

Dimensions
LM52^{exact}-6

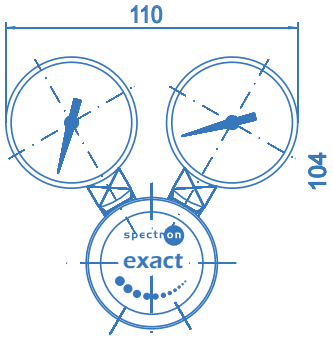

Side view

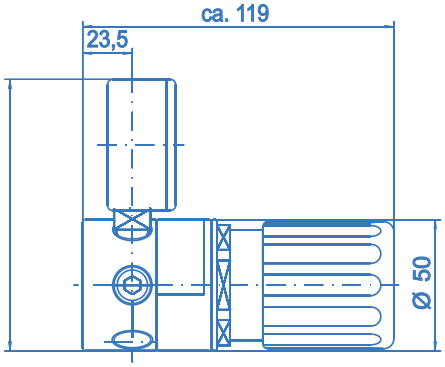

ÆRLIG
INTERESSERT
PRESIS

Line regulator LM52exact-6

spectrolab

Ordering information:
Line regulator LM52exact-6

In- / outlets

CM 1/4	- 1/8" / 1/4" / 1/2" - OD compression fitting (brass)
CM 6	- 3 / 6 / 8 / 10 / 12 mm compression fitting (brass)
CE 1/4	- 1/8" / 1/4" / 1/2" - OD compression fitting (stainless steel)
CE 6	- 3 / 6 / 8 / 10 / 12 mm compression fitting (stainless steel)
B	- plug
A	- relief valve - 1/4"-NPT-F
K	- contact gauge
M	- pressure gauge
0	- 1/4"-NPT-F (port only)

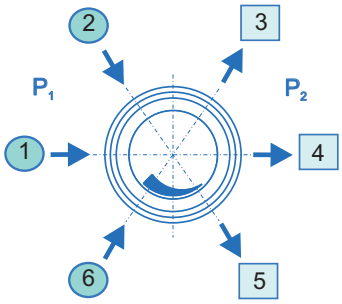

Inlet left: L

port selection

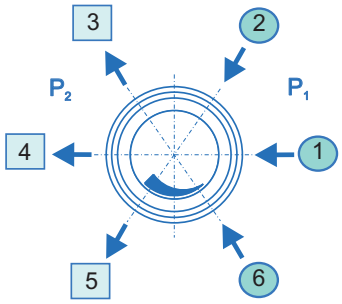

Inlet right: R

LM52 - 6 - L - 300 - 20 - 1 - 2 - 3 - 4 - 5 - 6 - N2

Inlet

L	- left
R	- right

Inlet pressure P_1

100	- max. 100 bar
200	- max. 200 bar
300	- max. 300 bar

Outlet pressure P_2

1,5	- to 1.5 bar
4	- to 4 bar
10	- to 10 bar
20	- to 20 bar

Type of gas

Please specify type of gas (for selection of valve seat materials)

For inlet pressure up to 50 bar and outlet pressure of max. 1,5 or 4 bar please use M51

Ordering example:
LM52-6-L-20-10-CE6-M-M-CE6-A-B-N2

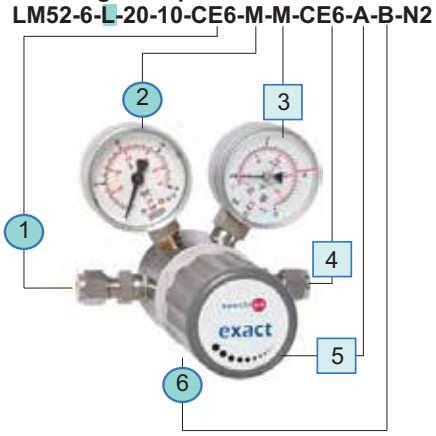

Ordering example:
LM52-6-R-200-10-0-M-M-CE1/8-A-B-Ar

LINJEREGULATOR
LM53-2

Line pressure regulator LM53-2

Line pressure regulator LM53-2

Specifications

- SPECTROLAB-components guarantee maximum quality by using high grade materials and a quality assurance program acc. to ISO 9001.
- All parts in the gas wetted surface area are cleaned in an ultrasonic cleaning system (CFC-free) with the special Cleaning process SPECTRO-CLEAN® and then baked out.
- SPECTROLAB-components undergo a 100% function- and Helium-leak-test.

Product features

- 2-stage diaphragm line pressure regulator with extremly stable outlet pressure and anti-vibration device
- For non-corrosive gases and gas mixtures up to quality 6.0
- 2 ports for flexible and individual configuration
- New laboratory-style design
- Central filter
- Suitable for ECD-applications
- Pressure regulator can be evacuated
- Suitable for inlet pressures up to 300 bar
- Max. outlet pressures 1.5 up to 20 bar
- Light weight
- Compact design
- Approved for use with oxygen
- Simple outlet pressure limitation by handwheel
- Easy to install

Technical data

Type	double-stage
Inlet pressure P_1	max. 300 bar
Outlet pressure P_2	1.5 / 4 / 10 / 20 bar
Materials	
Body regulator, relief valve:	chrome plated brass
Valve seat:	PA
Diaphragm:	Hastelloy C276
Soft goods:	EPDM
Filter:	Sintered bronze
In- and outlets	1/4" NPT-F
Temperature range	-30°C to +60°C
Leak rate (to atmosphere)	$1x10^{-8}$ mbar l/s He
(via seat)	$1x10^{-6}$ mbar l/s He
Weight	1.6 kg

Flow curves LM53

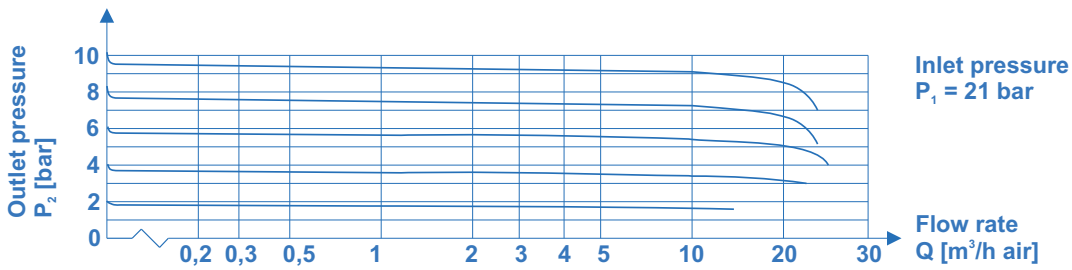

ÆRLIG INTERESSERT PRESIS

Line pressure regulator LM53-2

spectrolab

Dimensions

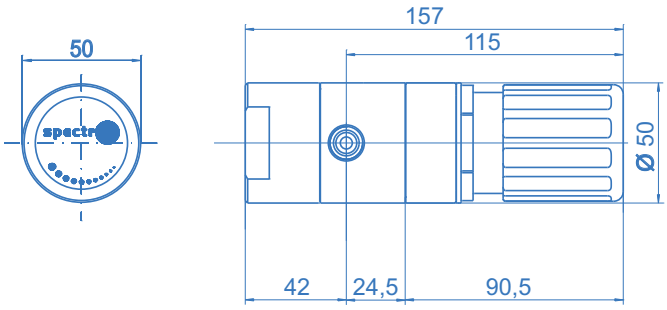

Ordering information:
Line pressure regulator LM53

In- / outlets

CM 1/4	- 1/8" / 1/4" / 1/2" - OD compression fitting (brass)
CM 6	- 3 / 6 / 8 / 10 / 12 mm compression fitting (brass)
CE 1/4	- 1/8" / 1/4" / ½" - OD compression fitting (stainless steel)
CE 6	- 3 / 6 / 8 / 10 / 12 mm compression fitting (stainless steel)
0	- 1/4" NPT-F (port only)

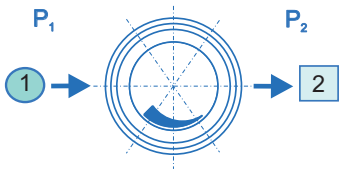

port selection

LM53 - 2 - 300 - 20 - 1 - 2 - N2

Inlet pressure P_1

100	- max. 100 bar
200	- max. 200 bar
300	- max. 300 bar

Outlet pressure P_2

1,5	- to 1.5 bar
4	- to 4 bar
10	- to 10 bar
20	- to 20 bar

Type of gas

Please specify type of gas (for selection of valve seat materials)

For inlet pressure up to 50 bar and outlet pressure of max. 1,5 or 4 bar please use M51

LINJEREGULATOR

LM53-6

Line pressure regulator LM53-6

Line pressure regulator LM53-6

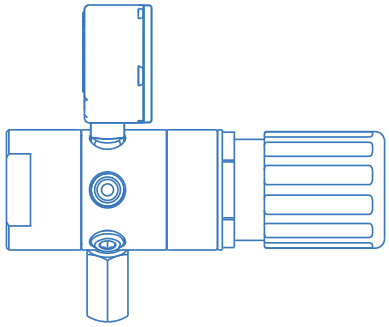

Product features

- 2-stage diaphragm line pressure regulator with extremly stable outlet pressure and anti-vibration device
- For non-corrosive gases and gas mixtures up to quality 6.0
- 6 ports for flexible and individual configuration
- New laboratory-style design
- Central filter
- Suitable for ECD-applications
- Pressure regulator can be evacuated
- Suitable for inlet pressures up to 300 bar
- Max. outlet pressures 1.5 up to 20 bar
- Light weight
- Compact design
- Approved for use with oxygen
- Simple outlet pressure limitation by handwheel
- Easy to install

Technical data

Type	double-stage
Inlet pressure P_1	max. 300 bar
Outlet pressure P_2	1.5 / 4 / 10 / 20 bar
Materials	
Body regulator, relief valve:	chrome plated brass
Valve seat:	PA
Diaphragm:	Hastelloy C276
Soft goods:	EPDM
Filter:	Sintered bronze
In- and outlets	1/4" NPT-F
Temperature range	-30°C to +60°C
Leak rate (to atmosphere)	$1x10^{-8}$ mbar l/s He
(via seat)	$1x10^{-6}$ mbar l/s He
Pressure gauge	Safety pressure gauges ISO5171/Kl1.6/NG50
Weight	1.7 kg

Flow curves LM53

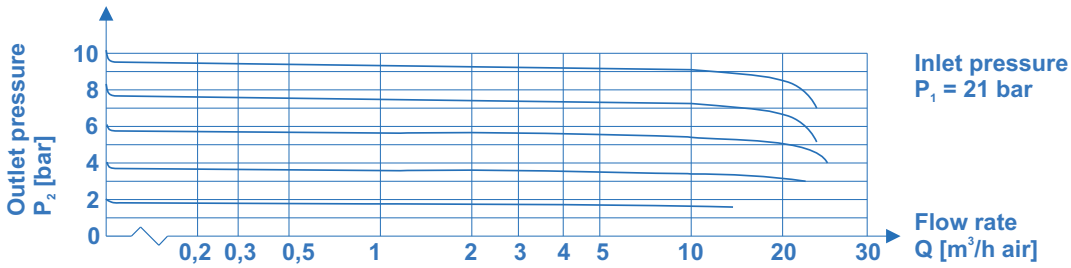

ÆRLIG
INTERESSERT
PRESIS

Line pressure regulator LM53-6

spectrolab

Dimensions

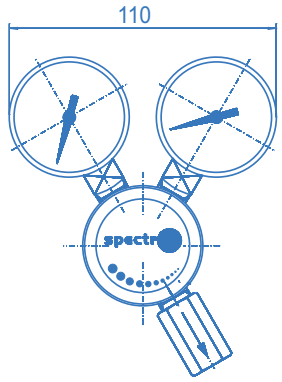

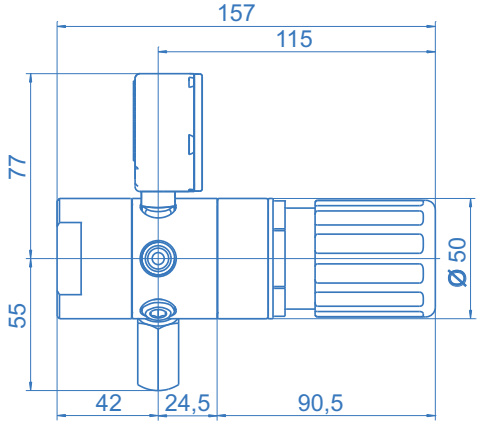

Ordering information:
Line pressure regulator LM53

In- / outlets

CM 1/4	- 1/8" / 1/4" / 1/2" - OD compression fitting (brass)
CM 6	- 3 / 6 / 8 / 10 / 12 mm compression fitting (brass)
CE 1/4	- 1/8" / 1/4" / ½" - OD compression fitting (stainless steel)
CE 6	- 3 / 6 / 8 / 10 / 12 mm compression fitting (stainless steel)
B	- plug
A	- relief valve - 1/4" NPT-F
K	- contact gauge
M	- pressure gauge
0	- 1/4" NPT-F (port only)

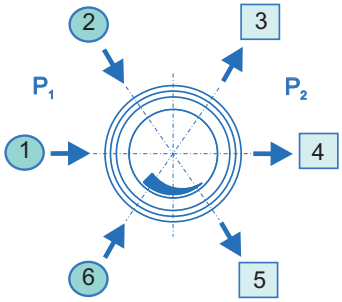

Inlet left: L

port selection

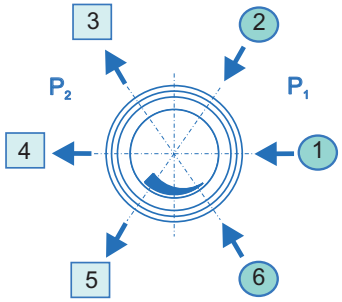

Inlet right: R

LM53 - L - 300 - 20 - 1 - 2 - 3 - 4 - 5 - 6 - N2

Inlet

L	- left
R	- right

Inlet pressure P_1

100	- max. 100 bar
200	- max. 200 bar
300	- max. 300 bar

Outlet pressure P_2

1,5	- to 1.5 bar
4	- to 4 bar
10	- to 10 bar
20	- to 20 bar

Type of gas

Please specify type of gas (for selection of valve seat materials)

For inlet pressure up to 50 bar and outlet pressure of max. 1,5 or 4 bar please use M51

LINJEREGULATOR
LM61/LM62

Line pressure regulator LM61 / LM62

Line pressure regulator LM61 / LM62

Dimensions
Pressure regulator LM61 / LM62

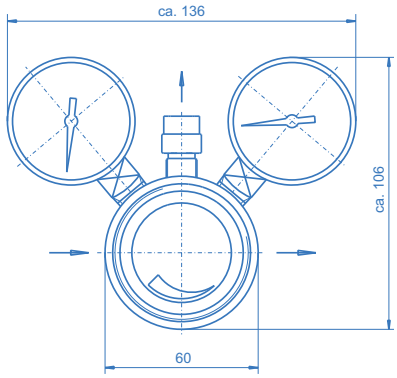

Product features

- Single- or double-stage line pressure regulator for non- corrosive gases and gas mixtures up to quality 6.0
- New laboratory-style design
- Central filter
- High control accuracy
- Integrated relief valve
- Tested for use with oxygen
- Suitable for ECD-applications
- Simple outlet pressure limitation by handwheel
- Powder-coated bonnet
- Piston type regulators for outlet pressure >20 bar

Technical data

Inlet pressure P_1	max. 300 bar
Max. outlet pressure P_2	1,5/4/10/20/50/100 bar
Flow rate Q	see flow curves
Materials	
Body:	chrome-plated brass
Diaphragm:	stainless steel 1.4310
Valve seat:	PA 11 or EPDM
Piston (P_2>20 bar):	Messing
Connectors	1/4” NPT female
Relief valve connector	1/8” NPT female
Leak rate	$1x10^{-8}$ mbar l/s He
Weight	1,3 kg (LM61) 1,6 kg (LM62)

Flow curves LM61 / LM62

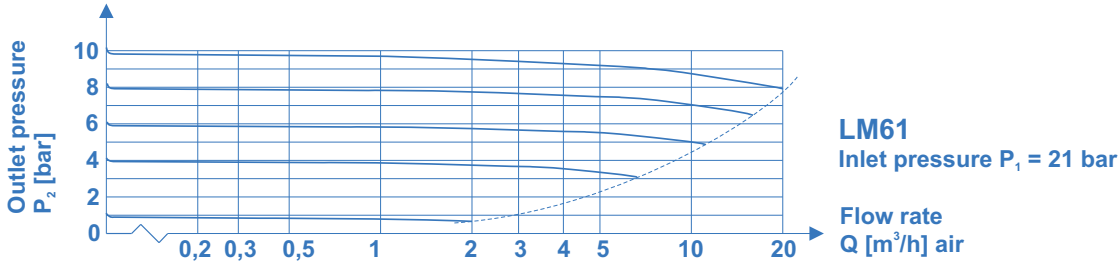

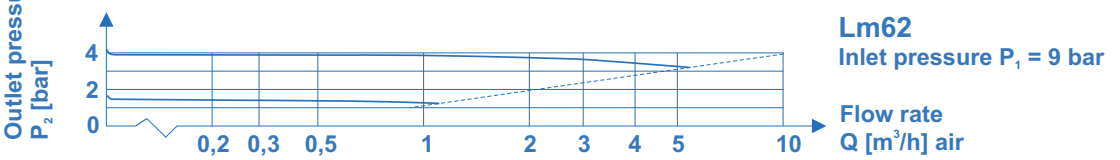

ÆRLIG
INTERESSERT
PRESIS

Line pressure regulator LM61 / LM62

spectrolab

Dimensions - pressure regulator LM61 / LM62

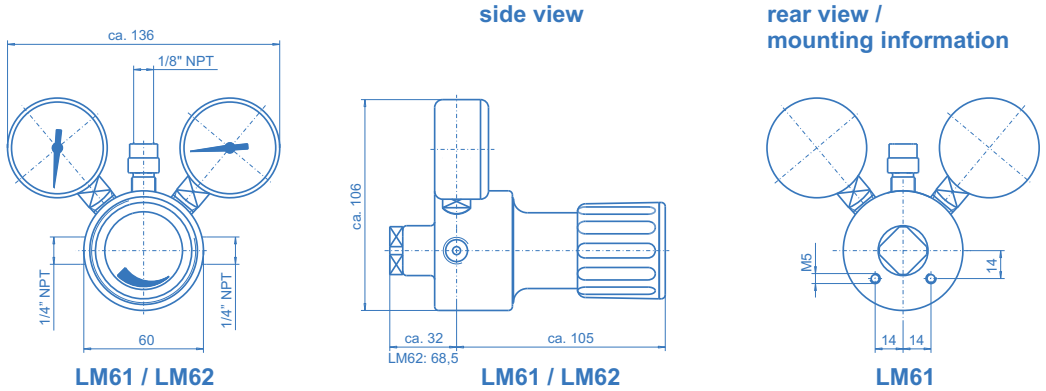

Additional configurations upon request!

Ordering information:
LM61 / LM62 series line pressure regulators

LM 61 - 200 - 10 - M - M - A - N_2

Type
- 61 - single-stage
- 62 - double-stage

Inlet pressure P_1
- 40 - max. 40 bar (only LM61)
- 200 - max. 200 bar
- 300 - max. 300 bar

Outlet pressure P_2
- 1,5 - to 1,5 bar (LM62)
- 4 - to 4 bar (LM62)
- 10 - to 10 bar
- 20 - to 20 bar
- 50 - to 50 bar (piston type)
- 100 - to 100 bar (piston type)

Inlet press. indication
- B - plug
- M - pressure gauge
- 0 - 1/4"-NPT-F (port only)

Type of gas
Please specify type of gas!

Relief valve
- B - without relief valve (plug)
- A - relief valve

Outlet press. indication
- B - plug
- M - pressure gauge
- 0 - 1/4"-NPT-F (port only)

Specifications

- SPECTROLAB - components guarantee maximum quality by using high grade materials and a quality assurance program acc. to ISO 9001.
- All components which come into contact with the medium are cleaned in an ultrasonic cleaning system (CFC-free) with the special cleaning process SPECTRO-CLEAN® and are then baked out.
- SPECTROLAB - components undergo a 100% Helium-leak-test.

Pressure indication

- All pressure regulators are equipped with pressure gauges for inlet- and outlet pressure indication.

Important note regarding component selection

- In order to assure safe operation it is essential to take the configuration of the whole system into account when selecting a pressure regulator.
- The function of the regulator, the compatibility of the materials, correlating temperature ranges, correct installation, operation and maintenance in accordance with the relevant regulations are the responsibility of the system designer and the user.

LINJEREGULATOR
LM71

Line pressure regulator LM71

Pressure regulator LM71

Dimensions
Pressure regulator LM71

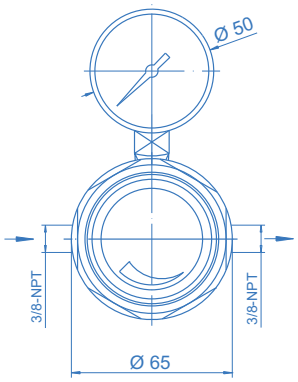

Product features

- Single-stage line pressure regulator for non-corrosive gases and gas mixtures up to quality 6.0.
- New laboratory-style design
- High control accuracy
- Suitable for ECD-applications
- Simple outlet pressure limitation by handwheel
- Powder-coated bonnet

Technical data

Inlet pressure P_1	max. 50 bar
Outlet pressure P_2	max. 20 bar
Flow rate Q	see flow curves
Materials	
Body:	chrome-plated brass
Diaphragm:	Hastelloy
Valve seat:	PTFE
In- / outlet	3/8”-NPT female
Pressure gauge connect.	1/4”-NPT female
Leak rate	$1x10^{-8}$ mbar l/s He
Weight	1,5 kg

Flow curves LM71

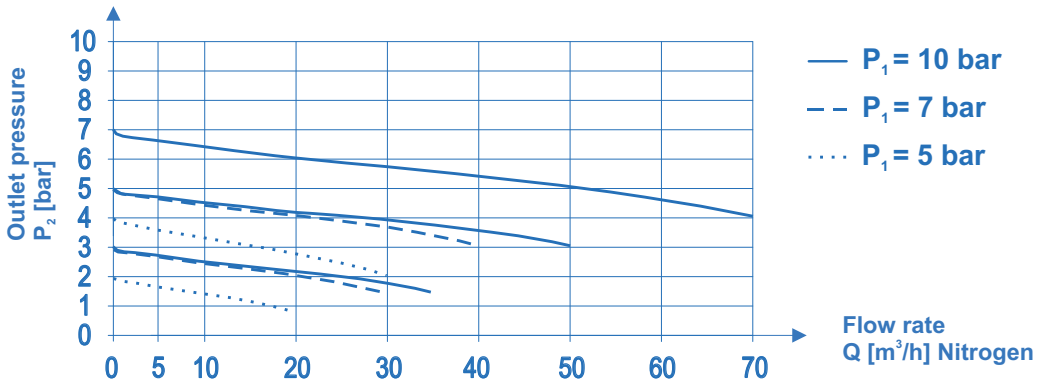

ÆRLIG
INTERESSERT
PRESIS

LINJEREGULATOR
LM71

Line pressure regulator LM71

Dimensions - LM71

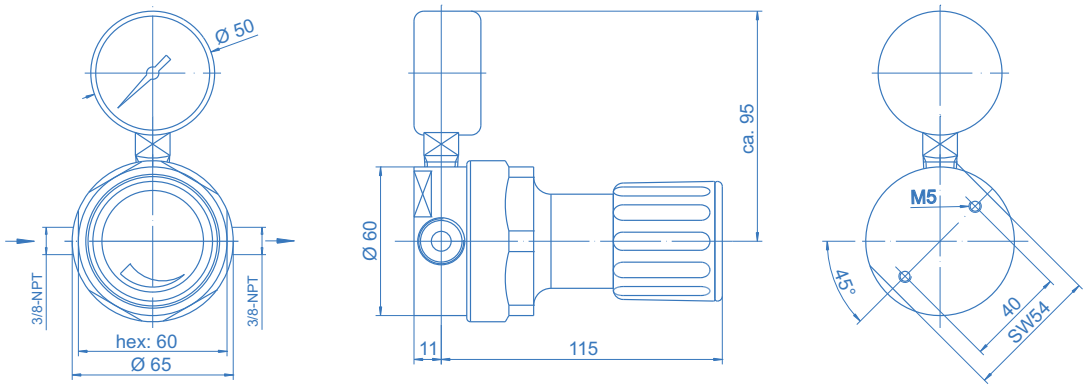

Ordering information:
LM71 series pressure regulators

LM71 - 50 - 10 - 0 - M - 0 - N_2

Inlet pressure P_1

50 - max. 50 bar

Outlet pressure P_2

1,5 - to 1,5 bar
4 - to 4 bar
10 - to 10 bar
20 - to 20 bar

Type of gas

Please specify type of gas!

Outlet press. indication

B - plug
M - pressure gauge
0 - 1/4"-NPT port

Specifications

- SPECTROLAB - components guarantee maximum quality by using high grade materials and a quality assurance program acc. to ISO 9001.
- All components which come into contact with the medium are cleaned in an ultrasonic cleaning system (CFC-free) with the special cleaning process SPECTRO-CLEAN® and are then baked out.
- SPECTROLAB - components undergo a 100% function- and Helium-leak-test.

Important note regarding component selection

- In order to assure safe operation it is essential to take the configuration of the whole system into account when selecting a control panel.
- The function of the components, the compatibility of the materials, correlating temperature ranges, correct installation, operation and maintenance in accordance with the relevant regulations are the responsibility of the system designer and the user.

Flaskeregulator FM53/FE53

FLASKEREGULATOR
FM45

Cylinder regulator FM45

Cylinder pressure regulator FM45

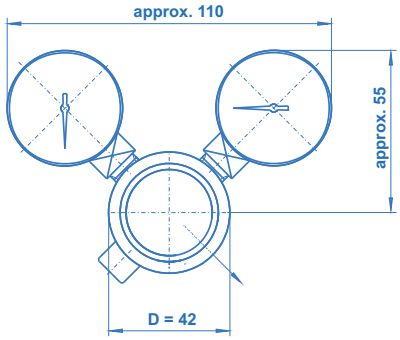

Product features

- Single-stage cylinder pressure regulator with compensated main valve for improved performance
- Simple and safe gas withdrawal from gas cylinders, for non-corrosive gases and gas mixtures up to quality 6.0
- Compensated main valve for significantly improved outlet pressure accuracy similar to a dual-stage regulator
- Compact design, light weight
- New laboratory-style design
- Manual cylinder connection (for non-metal-to-metal sealing cylinder connections)
- Suitable for ECD-applications
- High control accuracy
- Integrated relief valve
- Hastelloy-diaphragm
- Minimised gas-wetted surface

Technical data

Inlet pressure P_1	max. 230 bar 300 bar on request
Outlet pressure P_2	0.1 - 10 bar
Materials	
Body:	chrome-plated brass
Diaphragm:	Hastelloy C276
Valve seat:	PCTFE [1)]
Cylinder connection	acc. to international standards and gas type
Outlet connector	1/8"-NPT female
Temperature range	-30°C to +60°C
Leak rate (to atmosphere)	10^{-8} mbar l/sec He
Weight	520 g

[1]) Other valve seat materials such as PVDF upon request

Flow curves FM45

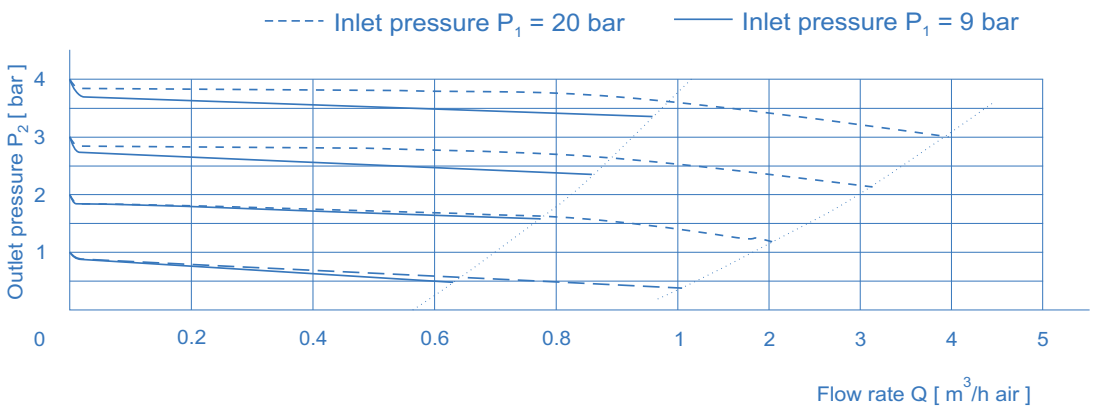

FLASKEREGULATOR
FM45

Cylinder regulator FM45

Dimensions

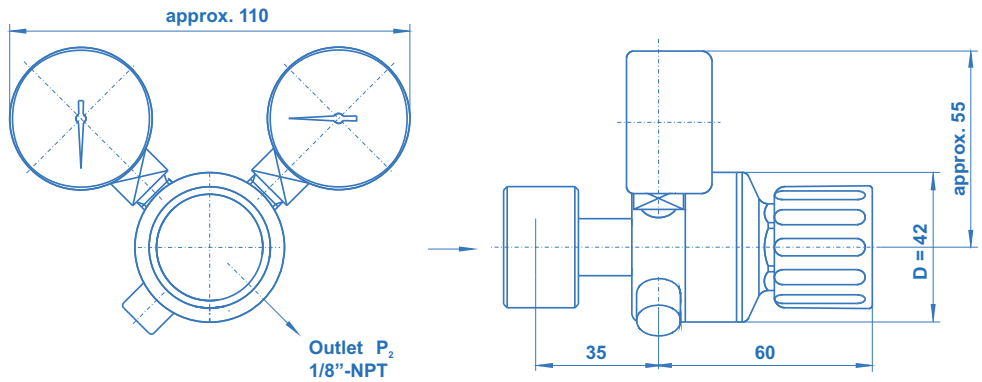

Additional configurations upon request!

Ordering information:
FM45 series cylinder regulators

FM45 - 230 - 4 - DIN477-1 - H_2

Inlet pressure P_1

230 - max. 230 bar

Outlet pressure P_2

1,5 - up to 1.5 bar
4 - up to 4 bar
10 - up to 10 bar

Type of gas

Please specify type of gas (for selection of valve seat material)

Cylinder connection

Detailed description of the cylinder connection including the relevant standard and the number of the connection (e.g. DIN477-1)

Specifications

- SPECTROLAB - components guarantee maximum quality by using high grade materials and a quality assurance program acc. to ISO 9001.
- All components which come into contact with the medium are cleaned in an ultrasonic cleaning system (CFC-free) with the special cleaning process SPECTRO-CLEAN® and are then baked out.
- SPECTROLAB - components undergo a 100% function- and Helium-leak-test.

Pressure indication

- All pressure regulators are equipped with pressure gauges for inlet- and outlet pressure indication.

Important note regarding component selection

- In order to assure safe operation it is essential to take the configuration of the whole gas supply system into account when selecting a pressure regulator.
- The function of the regulator, the compatibility of the materials, correlating temperature ranges, correct installation, operation and maintenance in accordance with the relevant regulations are the responsibility of the system designer and the user.

ÆRLIG INTERESSERT PRESIS

FLASKEREGULATOR
FM51

Cylinder regulator FM51

Cylinder regulator FM51

Specifications

- SPECTROLAB-components guarantee maximum quality by using high grade materials and a quality assurance program acc. to ISO 9001.
- All parts in the gas wetted surface area are cleaned in an ultrasonic cleaning system (CFC-free) with the special Cleaning process SPECTRO-CLEAN® and then baked out.
- SPECTROLAB-components undergo a 100% function- and Helium-leak-test.

Product features

- Brass (chrome plated) cylinder pressure regulator
- For non-corrosive gases and gas mixtures up to quality 6.0
- 6 ports for flexible and individual configuration
- Very stable outlet pressure
- Suitable for inlet pressures up to 300 bar
- Max. outlet pressures 1,5 up to 200 bar *
- Metal-to-metal seal to atmosphere
- Suitable for ECD-applications
- Pressure regulator can be evacuated
- Inlet filter
- Approved for use with oxygen
- Simple outlet pressure limitation by handwheel
- Easy to install
- New laboratory-style design
- Ergonomically designed

* 1,5 / 4 bar only for inlet pressure ≤ 50 bar

Technical data

Type	single-stage
Inlet pressure P_1	max. 300 bar
Outlet pressure P_2	1,5 / 4 bar (P_1 ≤ 50 bar) 10 / 20 / 50 / 100 / 200 bar (P_1 > 50 bar)
Materials	
Body regulator, relief valve:	chrome plated brass
Valve seat:	PA
Diaphragm:	Hastelloy C276
Filter:	Sintered SS 316L
In- and outlets	1/4" NPT-F
Temperature range	-30°C to +60°C
Leak rate (to atmosphere)	$1x10^{-8}$ mbar l/s He
(via seat)	$1x10^{-6}$ mbar l/s He
Pressure gauge	Safety pressure gauges ISO5171/Kl1.6/NG50
Flow capacitiy	C_V=0.15
Weight	1.2 kg

Dimensions
FM51

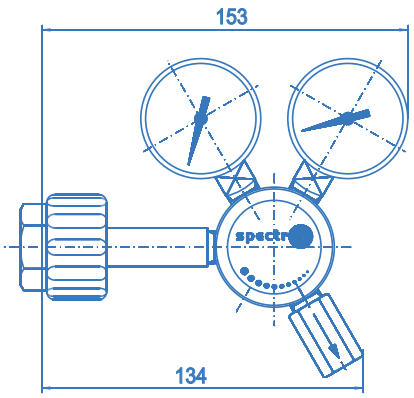

Side view

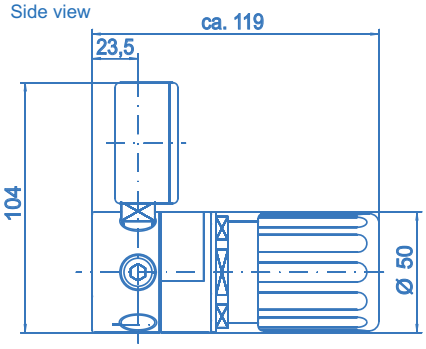

FLASKEREGULATOR
FM51

Cylinder regulator FM51

Ordering information:
Cylinder regulator FM51

In- / outlets

CM 1/4 - 1/8" / 1/4" / 1/2" - OD compression fitting (brass)
CM 6 - 3 / 6 / 8 / 10 / 12 mm compression fitting (brass)
CE 1/4 - 1/8" / 1/4" / ½" - OD compression fitting (stainless steel)
CE 6 - 3 / 6 / 8 / 10 / 12 mm compression fitting (stainless steel)
B - plug
A - relief valve - 1/4"-18 NPT-F ($P_2 \leq 100$ bar)
xxxx - detailed specification of cylinder connection including the relevant standard and number (e.g. BS no.3 for nitrogen up to 230 bar)
K - contact gauge
M - pressure gauge
0 - 1/4"-NPT-F (port only)

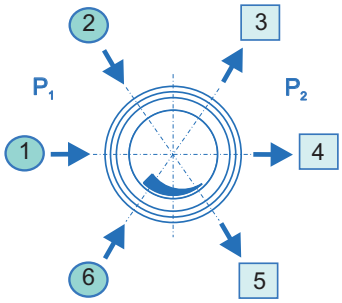

Inlet left: L

port selection

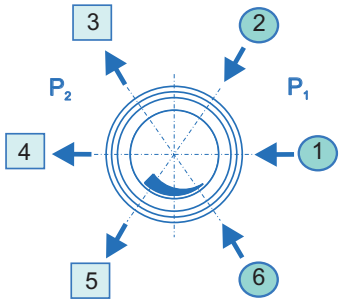

Inlet right: R

FM51 - L - 300 - 20 - 1 - 2 - 3 - 4 - 5 - 6 - N2

Inlet

L - left
R - right

Inlet pressure P_1

10 - max. 10 bar
20 - max. 20 bar
50 - max. 50 bar
100 - max. 100 bar
200 - max. 200 bar
300 - max. 300 bar

Outlet pressure P_2

1,5 - to 1,5 bar ($P_1 \leq 50$ bar)
4 - to 4 bar ($P_1 \leq 50$ bar)
10 - to 10 bar
20 - to 20 bar
50 - to 50 bar
100 - to 100 bar
200 - to 200 bar

Type of gas

Please specify type of gas (for selection of valve seat materials)

Ordering example:
FM51-L-200-10-DIN10-M-M-CE6-A-B-N2

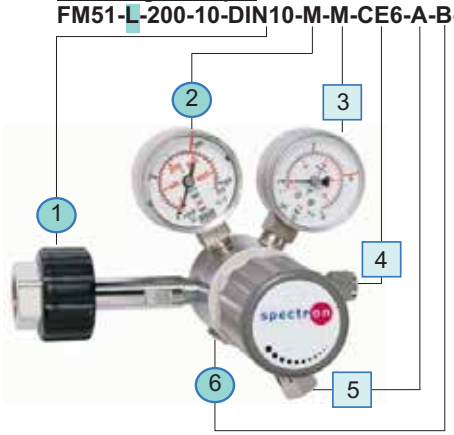

Ordering example:
FM51-R-200-10-CGA540-M-M-CE1/8-A-B-Ar

ÆRLIG
INTERESSERT
PRESIS

FLASKEREGULATOR

FM52exact

Cylinder regulator FM52exact

Cylinder regulator FM52exact

Specifications

- SPECTROLAB-components guarantee maximum quality by using high grade materials and a quality assurance program acc. to ISO 9001.
- All parts in the gas wetted surface area are cleaned in an ultrasonic cleaning system (CFC-free) with the special Cleaning process SPECTRO-CLEAN® and then baked out.
- SPECTROLAB-components undergo a 100% function- and Helium-leak-test.

Product features

- Brass (chrome plated) cylinder pressure regulator
- Extremly stable outlet pressure by applied extremly accurate Technology "exact" and anti- vibration device
- For non-corrosive gases and gas mixtures up to quality 6.0
- 6 ports for flexible and individual configuration
- Suitable for inlet pressures up to 300 bar
- Max. outlet pressures 1.5 up to 20 bar
- Light weight
- Compact design
- Metal-to-metal seal to atmosphere
- Suitable for ECD-applications
- Pressure regulator can be evacuated
- Central filter
- Approved for use with oxygen
- Simple outlet pressure limitation by handwheel
- Easy to install
- New laboratory-style design
- Ergonomically designed

exact = extremly accurate technology

Technical data

Type	single-stage EXACT
Inlet pressure P_1	max. 300 bar
Outlet pressure P_2	1.5 / 4 / 10 / 20 bar
Materials	
Body regulator, relief valve:	chrome plated brass
Valve seat:	PA
Diaphragm:	Hastelloy C276
Soft goods:	EPDM
Filter:	Sintered SS 316L
In- and outlets	1/4" NPT female
Temperature range	-30°C to +60°C
Leak rate (to atmosphere)	$1x10^{-8}$ mbar l/s He
(via seat)	$1x10^{-6}$ mbar l/s He
Pressure gauge	Safety pressure gauges ISO5171/KI1.6/NG50
Flow capacitiy	C_V=0.16
Weight	1.2 kg

Dimensions

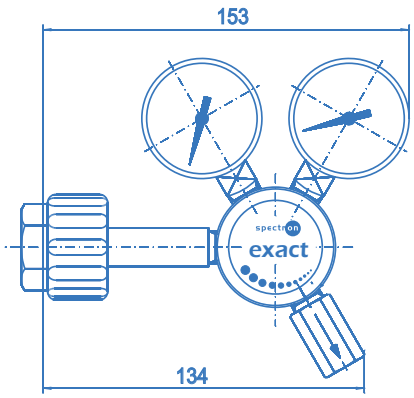

Side view FM52exact

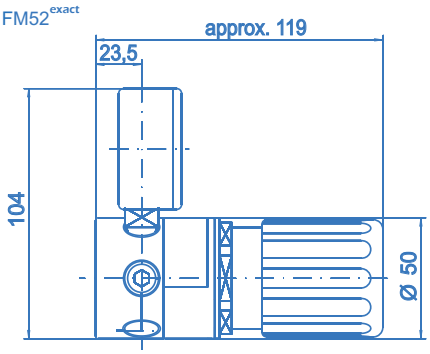

Cylinder regulator FM52exact

spectrolab

Ordering information:
Cylinder regulator FM52exact

In- / outlets

CM 1/4	- 1/8" / 1/4" / 1/2" - OD compression fitting (brass)
CM 6	- 3 / 6 / 8 / 10 / 12 mm compression fitting (brass)
CE 1/4	- 1/8" / 1/4" / ½" - OD compression fitting (stainless steel)
CE 6	- 3 / 6 / 8 / 10 / 12 mm compression fitting (stainless steel)
B	- plug
A	- relief valve - 1/4"-NPT-F
xxxx	- detailed specification of cylinder connection including the relevant standard and number (e.g. BS no.3 for nitrogen up to 230 bar)
K	- contact gauge
M	- pressure gauge
0	- 1/4"-NPT-F (port only)

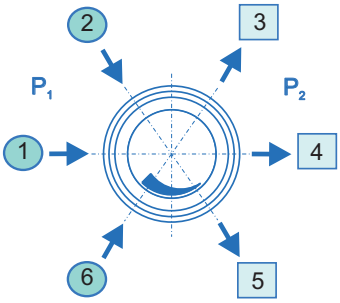

Inlet left: L

port selection

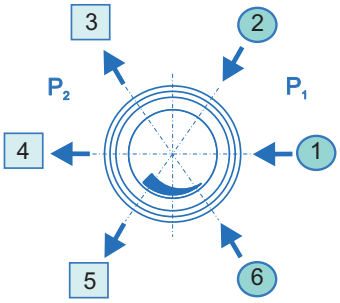

Inlet right: R

FM52 - L - 300 - 20 - 1 - 2 - 3 - 4 - 5 - 6 - N2

Inlet

L	- left
R	- right

Inlet pressure P_1

100	- max. 100 bar
200	- max. 200 bar
300	- max. 300 bar

Outlet pressure P_2

1,5	- to 1.5 bar
4	- to 4 bar
10	- to 10 bar
20	- to 20 bar

Type of gas

Please specify type of gas (for selection of valve seat materials)

For inlet pressure up to 50 bar and outlet pressure of max. 1,5 or 4 bar please use M51

Ordering example:
FM52-L-200-10-DIN10-M-M-CE6-A-B-N2

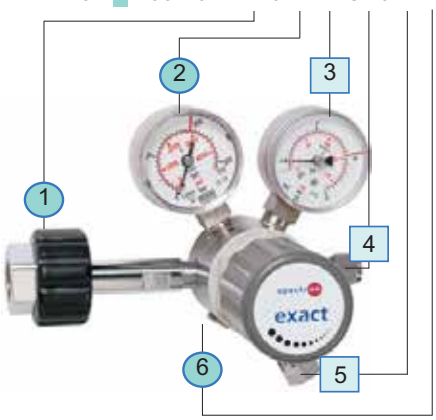

Ordering example:
FM52-R-200-10-CGA540-M-M-CE1/8-A-B-Ar

ÆRLIG INTERESSERT PRESIS

FLASKEREGULATOR

FM53

Cylinder pressure regulator FM53

Cylinder pressure regulator FM53

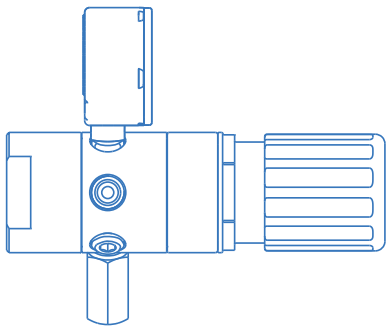

Product features

- 2-stage diaphragm cylinder pressure regulator with extremly stable outlet pressure and anti-vibration device
- For non-corrosive gases and gas mixtures up to quality 6.0
- 6 ports for flexible and individual configuration
- New laboratory-style design
- Central filter
- Suitable for ECD-applications
- Pressure regulator can be evacuated
- Suitable for inlet pressures up to 300 bar
- Max. outlet pressures 1.5 up to 20 bar
- Light weight
- Compact design
- Approved for use with oxygen
- Simple outlet pressure limitation by handwheel
- Easy to install

Technical data

Type	double-stage
Inlet pressure P_1	max. 300 bar
Outlet pressure P_2	1.5 / 4 / 10 / 20 bar
Materials	
Body regulator, relief valve:	chrome plated brass
Valve seat:	PA
Diaphragm:	Hastelloy C276
Soft goods:	EPDM
Filter:	Sintered bronze
In- and outlets	1/4" NPT-F
Temperature range	-30°C to +60°C
Leak rate (to atmosphere)	$1x10^{-8}$ mbar l/s He
(via seat)	$1x10^{-6}$ mbar l/s He
Pressure gauge	Safety pressure gauges ISO5171/Kl1.6/NG50
Weight	1.7 kg

Flow curves FM53

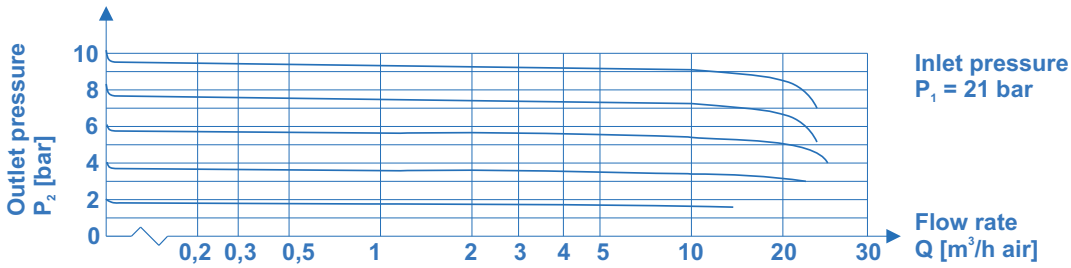

FLASKEREGULATOR

FM53

Cylinder pressure regulator FM53

spectrolab

Dimensions

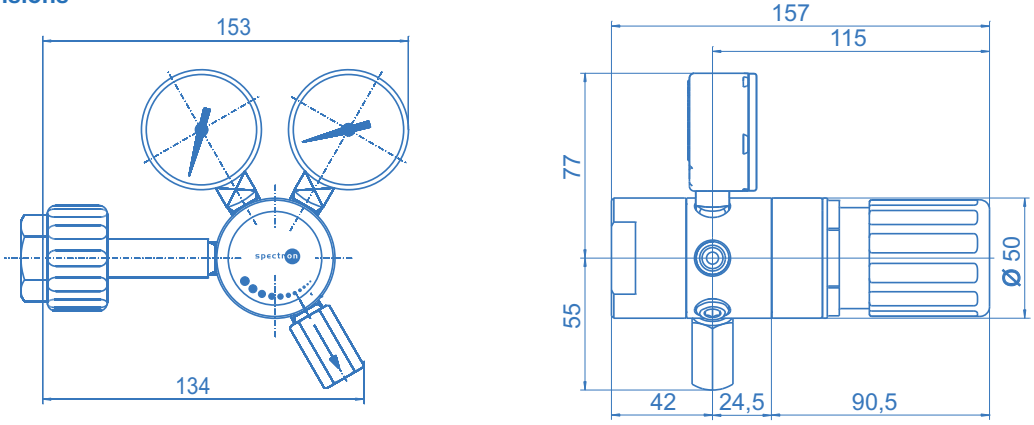

Ordering information:
Cylinder pressure regulator FM53

In- / outlets

CM 1/4	- 1/8" / 1/4" / 1/2" - OD compression fitting (brass)
CM 6	- 3 / 6 / 8 / 10 / 12 mm compression fitting (brass)
CE 1/4	- 1/8" / 1/4" / ½" - OD compression fitting (stainless steel)
CE 6	- 3 / 6 / 8 / 10 / 12 mm compression fitting (stainless steel)
B	- plug
A	- relief valve - 1/4" NPT-F
xxxx	- detailed specification of cylinder connection including the relevant standard and number (e.g. BS no.3 for nitrogen up to 230 bar)
K	- contact gauge
M	- pressure gauge
0	- 1/4" NPT-F (port only)

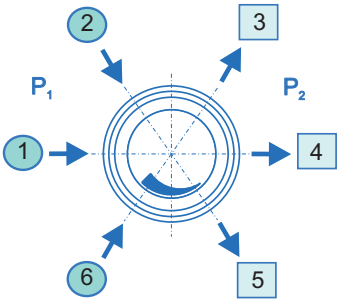

Inlet left: L

port selection

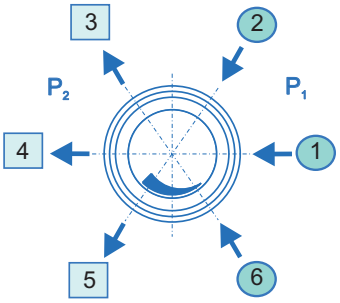

Inlet right: R

FM53 - L - 300 - 20 - 1 - 2 - 3 - 4 - 5 - 6 - N2

Inlet

L	- left
R	- right

Inlet pressure P_1

100	- max. 100 bar
200	- max. 200 bar
300	- max. 300 bar

Outlet pressure P_2

1,5	- to 1.5 bar
4	- to 4 bar
10	- to 10 bar
20	- to 20 bar

Type of gas

Please specify type of gas (for selection of valve seat materials)

For inlet pressure up to 50 bar and outlet pressure of max. 1,5 or 4 bar please use M51

ÆRLIG INTERESSERT PRESIS

FLASKEREGULATOR

FM61/FM62

Cylinder regulator FM 61/ FM 62

Cylinder regulator FM 61

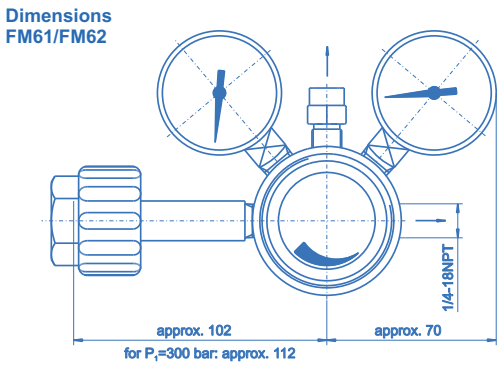

Product features

- Single- and dual-stage cylinder pressure regulators
- Simple and safe gas withdrawal from gas cylinders, for non- corrosive gases and gas mixtures up to quality 6.0
- New laboratory-style design
- Manual cylinder connection (not for metal-to-metal sealing connections)
- Ergonomically designed
- Filter at the regulator inlet
- Suitable for ECD-applications
- High control accuracy
- Integrated relief valve
- Simple outlet pressure limitation by handwheel
- Powder-coated bonnet
- Piston type regulators for outlet pressure >20 bar
- Tested for use with oxygen
- Compact design

Technical data

Inlet pressure P_1	max. 200/300 bar
Max. Outlet pressure P_2	1,5/4/10/20/50/100 bar
Flow rate Q	see flow curves
Materials	
Body:	chrome-plated brass
Diaphragms:	SS 1.4310 (SS 301)
Valve seat:	PA11 or EPDM, depending on gas type
Piston (P_2>20 bar):	brass
Cylinder connection	acc. to international standards and gas type
Outlet connector	1/4"-18 NPT-F
Relief valve connector	1/8"-27 NPT-F
Leak rate	10^{-8} mbar l/s He
Weight	1,8 kg (FM61) 2,1 kg (FM62)

Flow curves FM 61 / FM 62

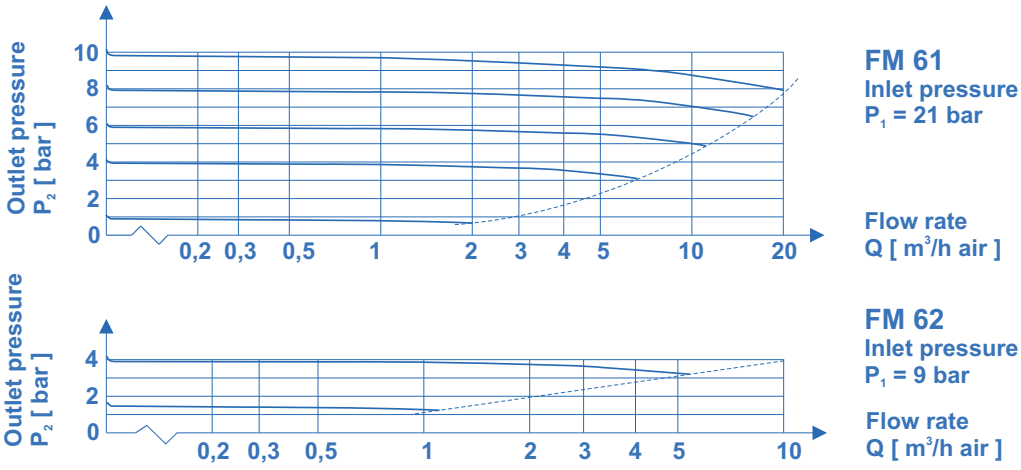

FLASKEREGULATOR

FM61/FM62

Cylinder regulator FM 61/ FM 62

spectrolab

Cylinder pressure regulator FM61/FM62

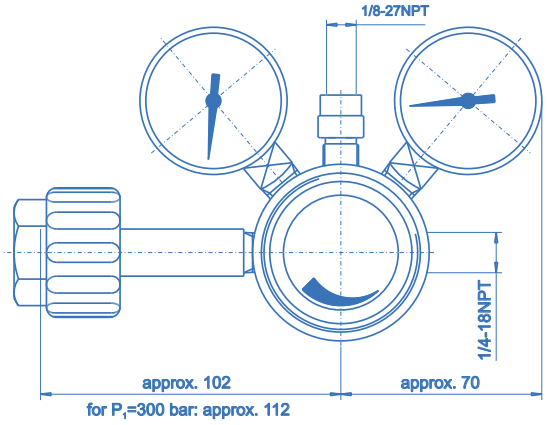

Side view

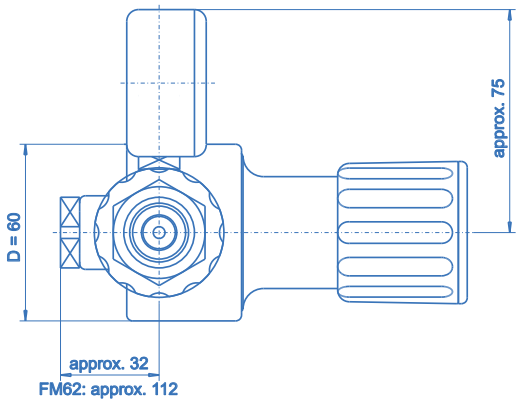

Additional configurations upon request!

Ordering information:
FM 61/ FM 62 series cylinder regulators

FM 61 - 200 - 10 - DIN 10 - N_2

Please specify gas type with your order (valve seat material)

Type

61 - single-stage regulator
62 - dual-stage regulator

Inlet pressure P_1

200 - max. 200 bar
300 - max. 300 bar

Outlet pressure P_2

1,5 - up to 1,5 bar (2-stage only)
4 - up to 4 bar (2-stage only)
10 - up to 10 bar (2-stage only)
20 - up to 20 bar (1-stage)
50 - up to 50 bar (1-stage, piston type regulator)
100 - up to 100 bar (1-stage, piston type regulator)

Type of gas

Please specify gas type!

Cylinder connection

Detailed description of the cylinder connection including the relevant standard and the number of the connection (e.g. BS no. 3)

Specifications

- SPECTROLAB - components guarantee maximum quality by using high grade materials and a quality assurance program acc. to ISO 9001.
- All components which come into contact with the medium are cleaned in an ultrasonic cleaning system (CFC-free) with the special cleaning process SPECTRO-CLEAN® and are then baked out.
- SPECTROLAB - components undergo a 100% Helium-leak-test.

Pressure indication

- All pressure regulators are equipped with pressure gauges for inlet- and outlet pressure indication.

Important note regarding component selection

- In order to assure safe operation it is essential to take the configuration of the whole system into account when selecting a pressure regulator.
- The function of the regulator, the compatibility of the materials, correlating temperature ranges, correct installation, operation and maintenance in accordance with the relevant regulations are the responsibility of the system designer and the user.

ÆRLIG INTERESSERT PRESIS

Flaskeregulator FM51/FE51

PANELREGULATOR
PM51-2

Panel regulator PM51-2

Panel regulator PM51-2

Example:
PM51
panel mounted

Product features

- Brass (chrome plated) panel pressure regulator
- For non-corrosive gases and gas mixtures up to quality 6.0
- 2 ports for flexible and individual configuration
- Very stable outlet pressure
- Suitable for inlet pressures up to 300 bar
- Max. outlet pressures 1,5 up to 200 bar *
- Metal-to-metal seal to atmosphere
- Suitable for ECD-applications
- Pressure regulator can be evacuated
- Inlet filter
- Approved for use with oxygen
- Simple outlet pressure limitation by handwheel
- Easy to install
- New laboratory-style design
- Ergonomically designed

* 1,5 / 4 bar only for inlet pressure ≤ 50 bar

Technical data

Type	single-stage
Inlet pressure P_1	max. 300 bar
Outlet pressure P_2	1,5 / 4 bar (P_1 ≤ 50 bar) 10 / 20 / 50 / 100 / 200 bar (P_1 > 50 bar)
Materials	
Body regulator:	chrome plated brass
Valve seat:	PA
Diaphragm:	Hastelloy C276
Filter:	Sintered SS 316L
In- and outlets	1/4" NPT-F
Temperature range	-30°C to +60°C
Leak rate (to atmosphere)	$1x10^{-8}$ mbar l/s He
(via seat)	$1x10^{-6}$ mbar l/s He
Flow capacitiy	C_V=0.15
Weight	1.0 kg

Dimensions
PM51-2

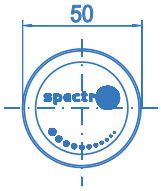

Side view

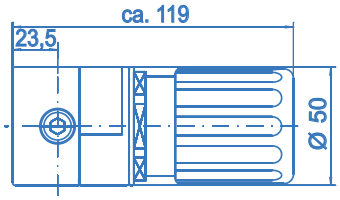

Bore template
for panel
mounting

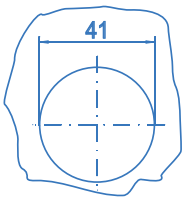

Fixing holes
for panel surface
mounting

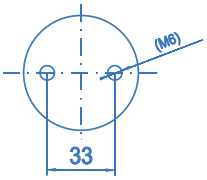

ÆRLIG
INTERESSERT
PRESIS

Panel regulator PM51-2

Ordering information:
Panel regulator PM51-2

In- / outlets

CM 1/4	- 1/8" / 1/4" / 1/2" - OD compression fitting (brass)
CM 6	- 3 / 6 / 8 / 10 / 12 mm compression fitting (brass)
CE 1/4	- 1/8" / 1/4" / 1/2" - OD compression fitting (stainless steel)
CE 6	- 3 / 6 / 8 / 10 / 12 mm compression fitting (stainless steel)
0	- 1/4"-NPT-F (port only)

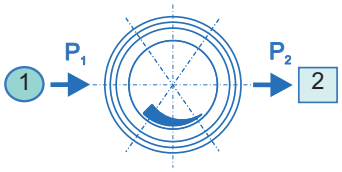

port selection

PM51 - 2 - 300 - 10 - 1 - 2 - N2

Inlet pressure P_1

10	- max. 10 bar	100	- max. 100 bar
20	- max. 20 bar	200	- max. 200 bar
50	- max. 50 bar	300	- max. 300 bar

Outlet pressure P_2

1,5	- to 1,5 bar ($P_1 \leq 50$ bar)
4	- to 4 bar ($P_1 \leq 50$ bar)
10	- to 10 bar
20	- to 20 bar
50	- to 50 bar
100	- to 100 bar
200	- to 200 bar

Type of gas

Please specify type of gas (for selection of valve seat materials)

Ordering example:
PM51-2-300-10-CE6-CE6-N2

PANELREGULATOR
PM51-4

Panel regulator PM51-4

Panel regulator PM51-4

Example:
PM51
panel mounted

Product features

- Brass (chrome plated) panel pressure regulator for panel and panel surface mounting
- For non-corrosive gases and gas mixtures up to quality 6.0
- 4 ports for flexible and individual configuration
- Very stable outlet pressure
- Suitable for inlet pressures up to 300 bar
- Max. outlet pressures 1,5 up to 200 bar *
- Metal-to-metal seal to atmosphere
- Suitable for ECD-applications
- Pressure regulator can be evacuated
- Inlet filter
- Approved for use with oxygen
- Simple outlet pressure limitation by handwheel
- Easy to install
- New laboratory-style design
- Ergonomically designed

* 1,5 / 4 bar only for inlet pressure ≤ 50 bar

Technical data

Type	single-stage
Inlet pressure P_1	max. 300 bar
Outlet pressure P_2	1,5 / 4 bar (P_1 ≤ 50 bar) 10 / 20 / 50 / 100 / 200 bar (P_1 > 50 bar)
Materials	
Body regulator, relief valve:	chrome plated brass
Valve seat:	PA
Diaphragm:	Hastelloy C276
Filter:	Sintered SS 316L
In- and outlets	1/4" NPT-F
Temperature range	-30°C to +60°C
Leak rate (to atmosphere)	$1x10^{-8}$ mbar l/s He
(via seat)	$1x10^{-6}$ mbar l/s He
Pressure gauge	Safety pressure gauges ISO5171/CI1.6/NG50
Flow capacitiy	C_V=0.15
Weight	1.0 kg

Dimensions
PM51-4

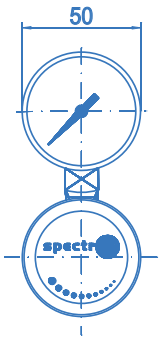

Side view

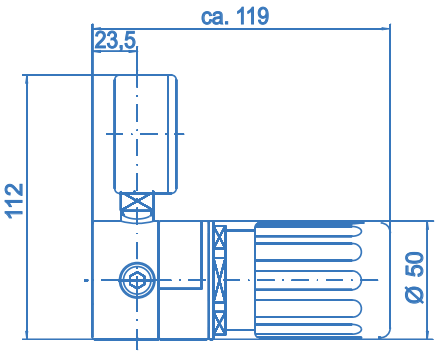

Bore template
for panel
mounting

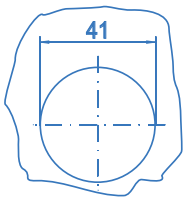

Fixing holes
for panel surface
mounting

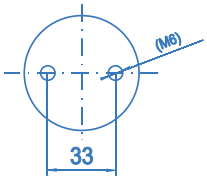

ÆRLIG
INTERESSERT
PRESIS

Panel regulator PM51-4

Ordering information:
Panel regulator PM51-4

In- / outlets

CM 1/4	- 1/8" / 1/4" / 1/2" - OD compression fitting (brass)
CM 6	- 3 / 6 / 8 / 10 / 12 mm compression fitting (brass)
CE 1/4	- 1/8" / 1/4" / 1/2" - OD compression fitting (stainless steel)
CE 6	- 3 / 6 / 8 / 10 / 12 mm compression fitting (stainless steel)
B	- plug
A	- relief valve - 1/4"-NPT-F ($P_2 \leq 100$ bar)
K	- contact gauge
M	- pressure gauge
0	- 1/4"-NPT-F (port only)

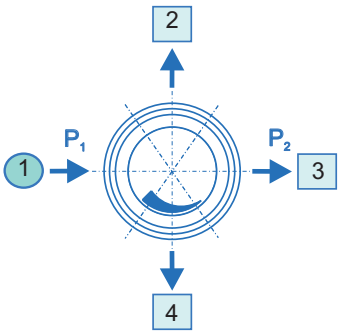

port selection

PM51 - 4 - 300 - 10 - 1 - 2 - 3 - 4 - N2

Inlet

L	- left
R	- right

Inlet pressure P_1

10	- max. 10 bar	100	- max. 100 bar
20	- max. 20 bar	200	- max. 200 bar
50	- max. 50 bar	300	- max. 300 bar

Outlet pressure P_2

1,5	- to 1,5 bar ($P_1 \leq 50$ bar)
4	- to 4 bar ($P_1 \leq 50$ bar)
10	- to 10 bar
20	- to 20 bar
50	- to 50 bar
100	- to 100 bar
200	- to 200 bar

Type of gas

Please specify type of gas (for selection of valve seat materials)

Ordering example:
PM51-4-300-10-CE6-M-CE6-B-N2

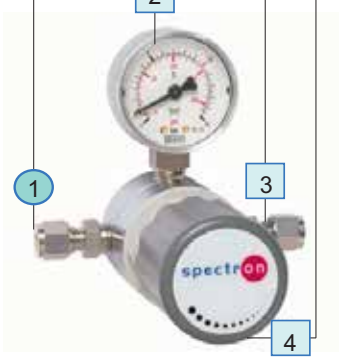

PANELREGULATOR

PM51-6

Panel regulator PM51-6

Panel regulator PM51-6

Example:
PM51
panel mounted

Product features

- Brass (chrome plated) panel pressure regulator for panel and panel surface mounting
- For non-corrosive gases and gas mixtures up to quality 6.0
- 6 ports for flexible and individual configuration
- Extremly stable outlet pressure
- Suitable for inlet pressures up to 300 bar
- Max. outlet pressures 1,5 up to 200 bar *
- Metal-to-metal seal to atmosphere
- Suitable for ECD-applications
- Pressure regulator can be evacuated
- Inlet filter
- Approved for use with oxygen
- Simple outlet pressure limitation by handwheel
- Easy to install
- New laboratory-style design
- Ergonomically designed

* 1,5 / 4 bar only for inlet pressure ≤ 50 bar

Technical data

Type	single-stage
Inlet pressure P_1	max. 300 bar
Outlet pressure P_2	1,5 / 4 bar (P_1 ≤ 50 bar) 10 / 20 / 50 / 100 / 200 bar (P_1 > 50 bar)
Materials	
Body regulator, relief valve:	chrome plated brass
Valve seat:	PA
Diaphragm:	Hastelloy C276
Filter:	Sintered SS 316L
In- and outlets	1/4" NPT-F
Temperature range	-30°C to +60°C
Leak rate (to atmosphere)	$1x10^{-8}$ mbar l/s He
(via seat)	$1x10^{-6}$ mbar l/s He
Pressure gauge	Safety pressure gauges ISO5171/Cl1.6/NG50
Flow capacitiy	C_V=0.15
Weight	1.1 kg

Dimensions
PM51-6

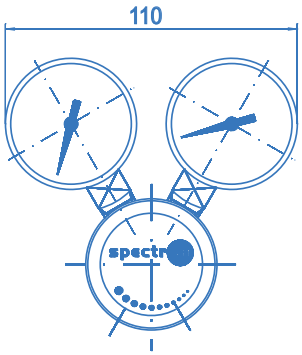

Side view

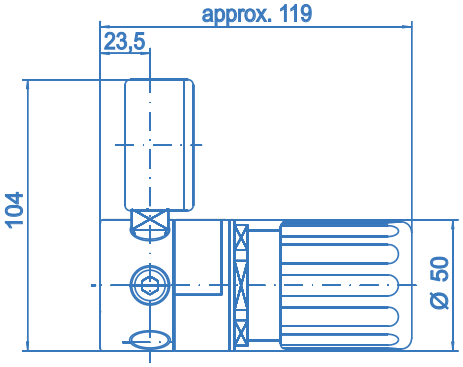

Bore template
for panel
mounting

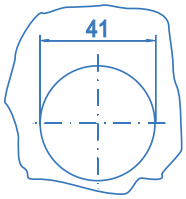

Fixing holes
for panel surface
mounting

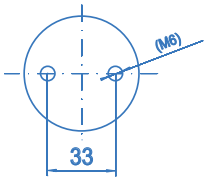

ÆRLIG
INTERESSERT
PRESIS

PANELREGULATOR
PM51-6

Panel regulator PM51-6

Ordering information:
Panel regulator PM51-6

In- / outlets

CM 1/4	- 1/8" / 1/4" / 1/2" - OD compression fitting (brass)
CM 6	- 3 / 6 / 8 / 10 / 12 mm compression fitting (brass)
CE 1/4	- 1/8" / 1/4" / 1/2" -OD compression fitting (stainless steel)
CE 6	- 3 / 6 / 8 / 10 / 12 mm compression fitting (stainless steel)
B	- plug
A	- relief valve - 1/4"-NPT-F ($P_2 \leq 100$ bar)
K	- contact gauge
M	- pressure gauge
0	- 1/4"-NPT-F (port only)

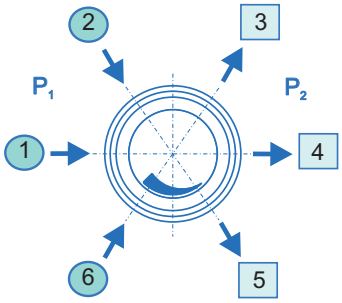

Inlet left: L

port selection

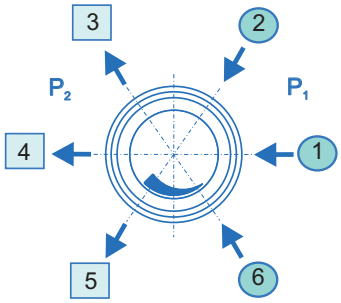

Inlet right: R

PM51 - 6 - L - 300 - 20 - 1 - 2 - 3 - 4 - 5 - 6 - N2

Inlet

L	- left
R	- right

Inlet pressure P_1

10	- max. 10 bar	100	- max. 100 bar
20	- max. 20 bar	200	- max. 200 bar
50	- max. 50 bar	300	- max. 300 bar

Outlet pressure P_2

1,5	- to 1,5 bar ($P_1 \leq 50$ bar)
4	- to 4 bar ($P_1 \leq 50$ bar)
10	- to 10 bar
20	- to 20 bar
50	- to 50 bar
100	- to 100 bar
200	- to 200 bar

Type of gas

Please specify type of gas (for selection of valve seat materials)

Ordering example:
PM51-6-L-20-10-CE6-M-M-CE6-B-0-N2

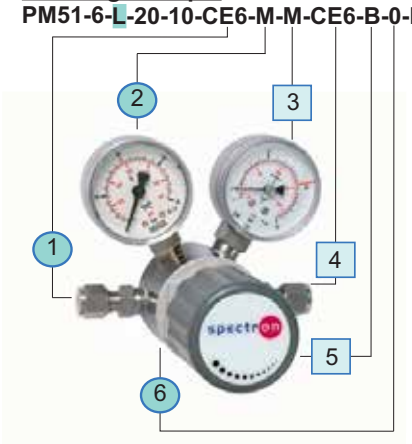

Ordering example:
PM51-6-R-200-10-0-M-M-CE1/8-A-B-Ar

PANELREGULATOR

PM52^{exact}-2

Panel regulator PM52^{exact}-2

Panel regulator PM52^{exact}-2

Example:
PM52^{exact}
panel mounted

Product features

- Brass (chrome plated) panel pressure regulator for panel and panel surface mounting
- Extremly stable outlet pressure by applied extremly accurate Technology "exact" and anti- vibration device
- For non-corrosive gases and gas mixtures up to quality 6.0
- 2 ports for flexible and individual configuration
- Suitable for inlet pressures up to 300 bar
- Max. outlet pressures 1.5 up to 20 bar
- Light weight
- Compact design
- Metal-to-metal seal to atmosphere
- Suitable for ECD-applications
- Pressure regulator can be evacuated
- Central filter
- Approved for use with oxygen
- Simple outlet pressure limitation by handwheel
- Easy to install
- New laboratory-style design
- Ergonomically designed

exact = extremly accurate technology

Technical data

Type	single-stage EXACT
Inlet pressure P_1	max. 300 bar
Outlet pressure P_2	1.5 / 4 / 10 / 20 bar
Materials	
Body regulator:	chrome plated brass
Valve seat:	PA
Diaphragm:	Hastelloy C276
Soft goods:	EPDM
Filter:	Sintered SS 316L
In- and outlets	1/4" NPT female
Temperature range	-30°C to +60°C
Leak rate (to atmosphere)	$1x10^{-8}$ mbar l/s He
(via seat)	$1x10^{-6}$ mbar l/s He
Flow capacitiy	C_V=0.16
Weight	1.0 kg

Dimensions
PM52^{exact}-2

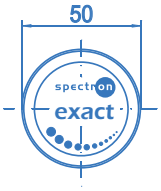

Side view

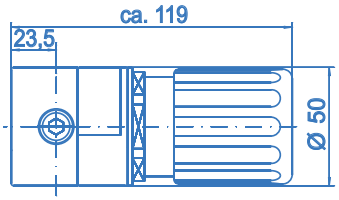

Bore template
for panel
mounting

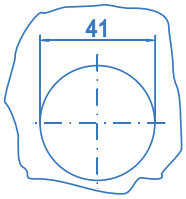

Fixing holes
for panel surface
mounting

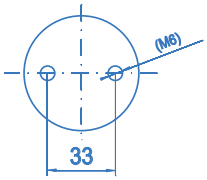

ÆRLIG
INTERESSERT
PRESIS

Panel regulator PM52^{exact}-2

Ordering information:
Panel regulator PM52^{exact}-2

In- / outlets

CM	1/4	- 1/8" / 1/4" / 1/2" - OD compression fitting (brass)
CM	6	- 3 / 6 / 8 / 10 / 12 mm compression fitting (brass)
CE	1/4	- 1/8" / 1/4" / 1/2" - OD compression fitting (stainless steel)
CE	6	- 3 / 6 / 8 / 10 / 12 mm compression fitting (stainless steel)
0		- 1/4"-NPT-F (port only)

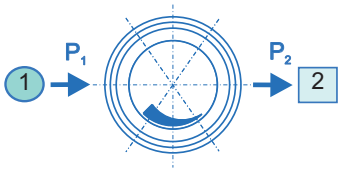

port selection

PM52 - 2 - 300 - 10 - 1 - 2 - N2

Inlet pressure P_1

100	- max. 100 bar
200	- max. 200 bar
300	- max. 300 bar

Outlet pressure P_2

1,5	- to 1.5 bar
4	- to 4 bar
10	- to 10 bar
20	- to 20 bar

Type of gas

Please specify type of gas (for selection of valve seat materials)

For inlet pressure up to 50 bar and outlet pressure of max. 1,5 or 4 bar please use M51

Ordering example:
PM52-2-300-10-CE6-CE6-N2

Specifications

- SPECTROLAB-components guarantee maximum quality by using high grade materials and a quality assurance program acc. to ISO 9001.
- All parts in the gas wetted surface area are cleaned in an ultrasonic cleaning system (CFC-free) with the special Cleaning process SPECTRO-CLEAN® and then baked out.
- SPECTROLAB-components undergo a 100% function- and Helium-leak-test.

PANELREGULATOR

PM52^{exact}-4

Panel regulator PM52^{exact}-4

Panel regulator
PM52^{exact}-4

Example:
PM52^{exact}
panel mounted

Product features

- Brass (chrome plated) panel pressure regulator for panel and panel surface mounting
- Extremly stable outlet pressure by applied extremly accurate Technology "exact" and anti- vibration device
- For non-corrosive gases and gas mixtures up to quality 6.0
- 4 ports for flexible and individual configuration
- Suitable for inlet pressures up to 300 bar
- Max. outlet pressures 1.5 up to 20 bar
- Light weight
- Compact design
- Metal-to-metal seal to atmosphere
- Suitable for ECD-applications
- Pressure regulator can be evacuated
- Central filter
- Approved for use with oxygen
- Simple outlet pressure limitation by handwheel
- Easy to install
- New laboratory-style design
- Ergonomically designed

exact = extremly accurate technology

Technical data

Type	single-stage EXACT
Inlet pressure P_1	max. 300 bar
Outlet pressure P_2	1.5 / 4 / 10 / 20 bar
Materials	
Body regulator, relief valve:	chrome plated brass
Valve seat:	PA
Diaphragm:	Hastelloy C276
Soft goods:	EPDM
Filter:	Sintered SS 316L
In- and outlets	1/4" NPT female
Temperature range	-30°C to +60°C
Leak rate (to atmosphere)	$1x10^{-8}$ mbar l/s He
(via seat)	$1x10^{-6}$ mbar l/s He
Pressure gauge	Safety pressure gauges ISO5171/KI1.6/NG50
Flow capacitiy	C_V=0.16
Weight	1.0 kg

Dimensions
PM52^{exact}-4

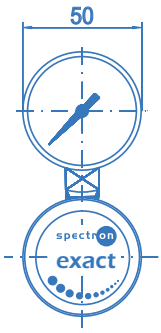

Side view

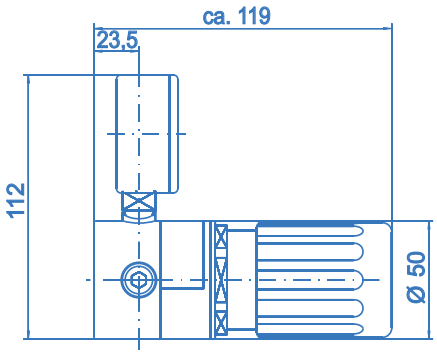

Bore template
for panel
mounting

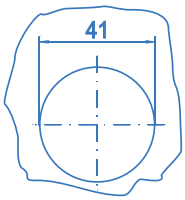

Fixing holes
for panel surface
mounting

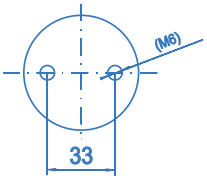

ÆRLIG
INTERESSERT
PRESIS

PANELREGULATOR

PM52^{exact}-4

Panel regulator PM52^{exact}-4

spectro lab

Ordering information:
Panel regulator PM52^{exact}-4

In- / outlets

CM 1/4	- 1/8" / 1/4" / 1/2" - OD compression fitting (brass)
CM 6	- 3 / 6 / 8 / 10 / 12 mm compression fitting (brass)
CE 1/4	- 1/8" / 1/4" / 1/2" - OD compression fitting (stainless steel)
CE 6	- 3 / 6 / 8 / 10 / 12 mm compression fitting (stainless steel)
B	- plug
A	- relief valve - 1/4"-NPT-F
K	- contact gauge
M	- pressure gauge
0	- 1/4"-NPT-F (port only)

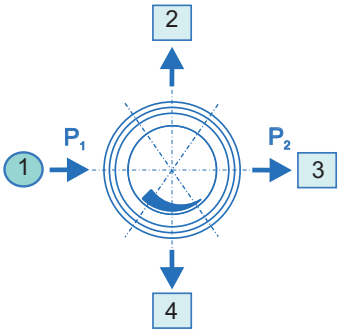

port selection

PM52 - 4 - 300 - 10 - 1 - 2 - 3 - 4 - N2

Inlet pressure P_1

100	- max. 100 bar
200	- max. 200 bar
300	- max. 300 bar

Outlet pressure P_2

1,5	- to 1.5 bar
4	- to 4 bar
10	- to 10 bar
20	- to 20 bar

Type of gas

Please specify type of gas (for selection of valve seat materials)

For inlet pressure up to 50 bar and outlet pressure of max. 1,5 or 4 bar please use M51

Ordering example:
PM52-4-300-10-CE6-M-CE6-B-N2

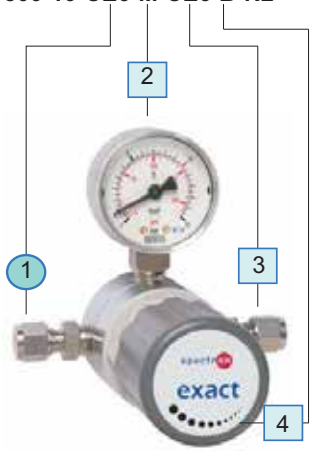

Specifications

- SPECTROLAB-components guarantee maximum quality by using high grade materials and a quality assurance program acc. to ISO 9001.
- All parts in the gas wetted surface area are cleaned in an ultrasonic cleaning system (CFC-free) with the special Cleaning process SPECTRO-CLEAN® and then baked out.
- SPECTROLAB-components undergo a 100% function- and Helium-leak-test.

PANELREGULATOR

PM52^{exact}-6

Panel regulator PM52^{exact}-6

Panel regulator
PM52^{exact}-6

Example:
PM52^{exact}
panel mounted

Product features

- Brass (chrome plated) panel pressure regulator for panel and panel surface mounting
- Extremly stable outlet pressure by applied extremly accurate Technology "exact" and anti- vibration device
- For non-corrosive gases and gas mixtures up to quality 6.0
- 6 ports for flexible and individual configuration
- Suitable for inlet pressures up to 300 bar
- Max. outlet pressures 1.5 up to 20 bar
- Light weight
- Compact design
- Metal-to-metal seal to atmosphere
- Suitable for ECD-applications
- Pressure regulator can be evacuated
- Central filter
- Approved for use with oxygen
- Simple outlet pressure limitation by handwheel
- Easy to install
- New laboratory-style design
- Ergonomically designed

exact = extremly accurate technology

Technical data

Type	single-stage EXACT
Inlet pressure P_1	max. 300 bar
Outlet pressure P_2	1.5 / 4 / 10 / 20 bar
Materials	
Body regulator, relief valve:	chrome plated brass
Valve seat:	PA
Diaphragm:	Hastelloy C276
Soft goods:	EPDM
Filter:	Sintered SS 316L
In- and outlets	1/4" NPT female
Temperature range	-30°C to +60°C
Leak rate (to atmosphere)	$1x10^{-8}$ mbar l/s He
(via seat)	$1x10^{-6}$ mbar l/s He
Pressure gauge	Safety pressure gauges ISO5171/KI1.6/NG50
Flow capacitiy	C_V=0.16
Weight	1.1 kg

Dimensions
PM52^{exact}-6

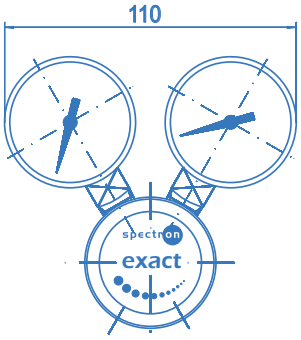

Side view

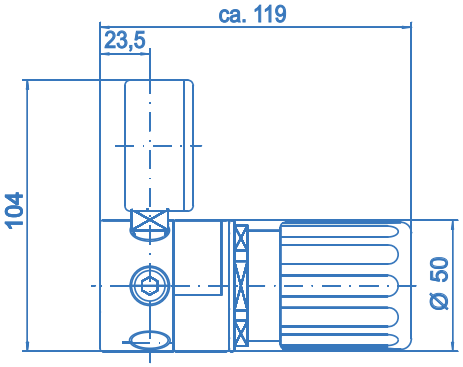

Bore template
for panel
mounting

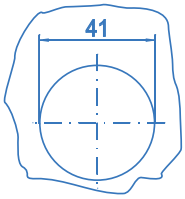

Fixing holes
for panel surface
mounting

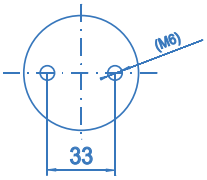

ÆRLIG
INTERESSERT
PRESIS

Panel regulator PM52^{exact}-6

spectro lab

Ordering information:
Panel regulator PM52^{exact}-6

In- / outlets

CM 1/4	- 1/8" / 1/4" / 1/2" - OD compression fitting (brass)
CM 6	- 3 / 6 / 8 / 10 / 12 mm compression fitting (brass)
CE 1/4	- 1/8" / 1/4" / 1/2" - OD compression fitting (stainless steel)
CE 6	- 3 / 6 / 8 / 10 / 12 mm compression fitting (stainless steel)
B	- plug
A	- relief valve - 1/4"-NPT-F
K	- contact gauge
M	- pressure gauge
0	- 1/4"-NPT-F (port only)

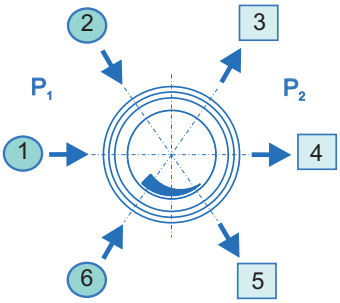

Inlet left: L

port selection

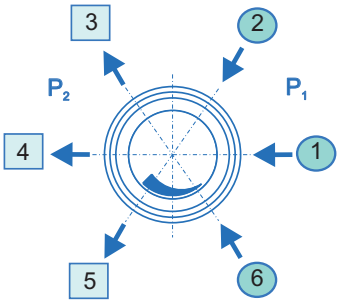

Inlet right: R

PM52 - 6 - L - 300 - 20 - 1 - 2 - 3 - 4 - 5 - 6 - N2

Inlet

L	- left
R	- right

Inlet pressure P_1

100	- max. 100 bar
200	- max. 200 bar
300	- max. 300 bar

Outlet pressure P_2

1,5	- to 1.5 bar
4	- to 4 bar
10	- to 10 bar
20	- to 20 bar

Type of gas

Please specify type of gas (for selection of valve seat materials)

For inlet pressure up to 50 bar and outlet pressure of max. 1,5 or 4 bar please use M51

Ordering example:
PM52-6-L-20-10-CE6-M-M-CE6-A-B-N2

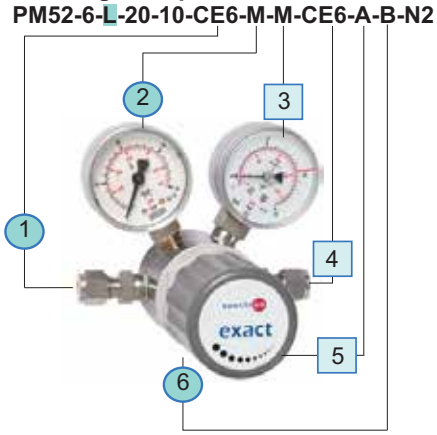

Ordering example:
PM52-6-R-200-10-0-M-M-CE1/8-A-B-Ar

PANELREGULATOR

PM53-2

Panel pressure regulator PM53-2

Panel pressure regulator PM53-2

Product features

- 2-stage diaphragm panel pressure regulator with extremly stable outlet pressure and anti-vibration device
- For non-corrosive gases and gas mixtures up to quality 6.0
- 2 ports for flexible and individual configuration
- New laboratory-style design
- Central filter
- Suitable for ECD-applications
- Pressure regulator can be evacuated
- Suitable for inlet pressures up to 300 bar
- Max. outlet pressures 1.5 up to 20 bar
- Light weight
- Compact design
- Approved for use with oxygen
- Simple outlet pressure limitation by handwheel
- Easy to install

Technical data

Type	double-stage
Inlet pressure P_1	max. 300 bar
Outlet pressure P_2	1.5 / 4 / 10 / 20 bar
Materials	
Body regulator, relief valve:	chrome plated brass
Valve seat:	PA
Diaphragm:	Hastelloy C276
Soft goods:	EPDM
Filter:	Sintered bronze
In- and outlets	1/4" NPT-F
Temperature range	-30°C to +60°C
Leak rate (to atmosphere)	$1x10^{-8}$ mbar l/s He
(via seat)	$1x10^{-6}$ mbar l/s He
Weight	1.6 kg

Flow curves PM53

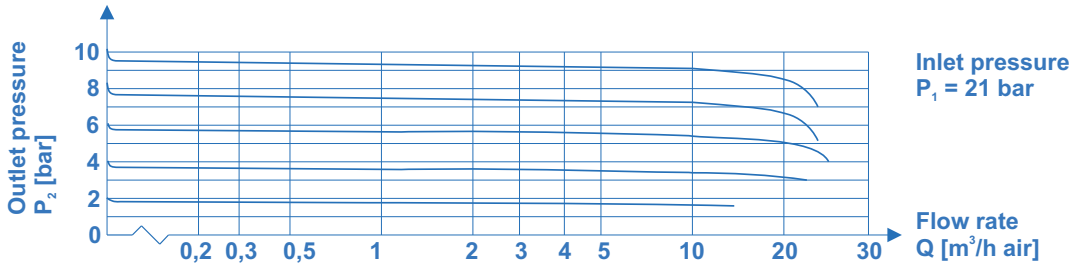

ÆRLIG
INTERESSERT
PRESIS

Panel pressure regulator PM53-2

spectrolab

Dimensions

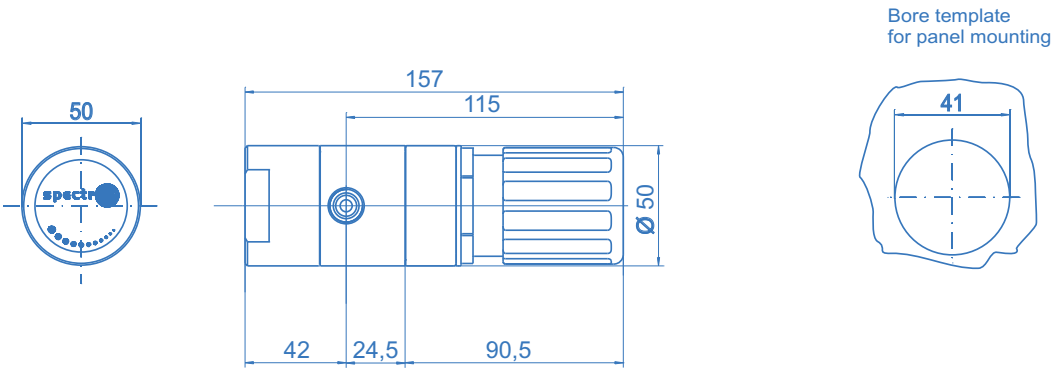

Ordering information:
Panel pressure regulator PM53

In- / outlets

CM 1/4	- 1/8" / 1/4" / 1/2" - OD compression fitting (brass)
CM 6	- 3 / 6 / 8 / 10 / 12 mm compression fitting (brass)
CE 1/4	- 1/8" / 1/4" / ½" - OD compression fitting (stainless steel)
CE 6	- 3 / 6 / 8 / 10 / 12 mm compression fitting (stainless steel)
0	- 1/4" NPT-F (port only)

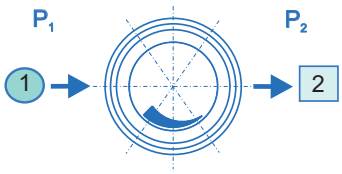

port selection

PM53 - 2 - 300 - 20 - 1 - 2 - N2

Inlet pressure P_1

100	- max. 100 bar
200	- max. 200 bar
300	- max. 300 bar

Outlet pressure P_2

1,5	- to 1.5 bar
4	- to 4 bar
10	- to 10 bar
20	- to 20 bar

Type of gas

Please specify type of gas (for selection of valve seat materials)

For inlet pressure up to 50 bar and outlet pressure of max. 1,5 or 4 bar please use M51

PANELREGULATOR

PM53-6

Panel pressure regulator PM53-6

Panel pressure regulator PM53-6

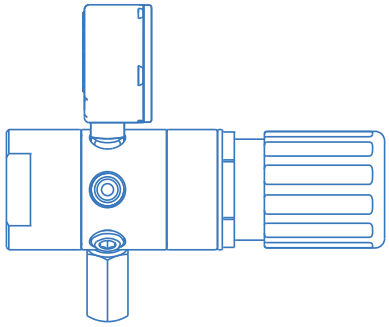

Product features

- 2-stage diaphragm panel pressure regulator with extremly stable outlet pressure and anti-vibration device
- For non-corrosive gases and gas mixtures up to quality 6.0
- 6 ports for flexible and individual configuration
- New laboratory-style design
- Central filter
- Suitable for ECD-applications
- Pressure regulator can be evacuated
- Suitable for inlet pressures up to 300 bar
- Max. outlet pressures 1.5 up to 20 bar
- Light weight
- Compact design
- Approved for use with oxygen
- Simple outlet pressure limitation by handwheel
- Easy to install

Technical data

Type	double-stage
Inlet pressure P_1	max. 300 bar
Outlet pressure P_2	1.5 / 4 / 10 / 20 bar
Materials	
Body regulator, relief valve:	chrome plated brass
Valve seat:	PA
Diaphragm:	Hastelloy C276
Soft goods:	EPDM
Filter:	Sintered bronze
In- and outlets	1/4" NPT-F
Temperature range	-30°C to +60°C
Leak rate (to atmosphere)	$1x10^{-8}$ mbar l/s He
(via seat)	$1x10^{-6}$ mbar l/s He
Pressure gauge	Safety pressure gauges ISO5171/KI1.6/NG50
Weight	1.7 kg

Flow curves PM53

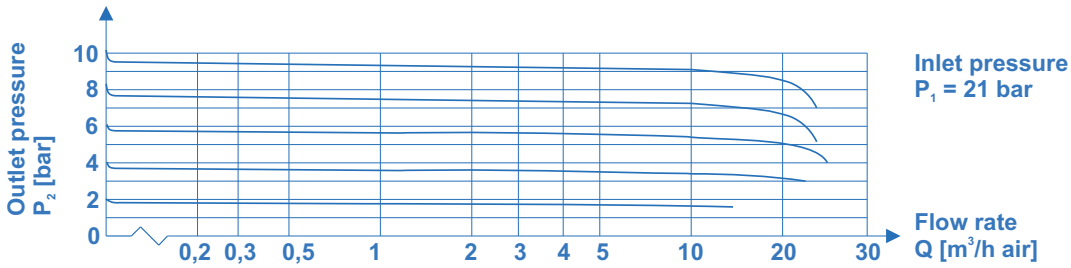

ÆRLIG
INTERESSERT
PRESIS

Panel pressure regulator PM53-6

spectrolab

Dimensions

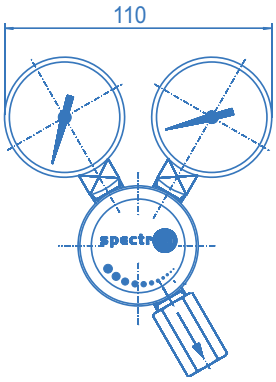

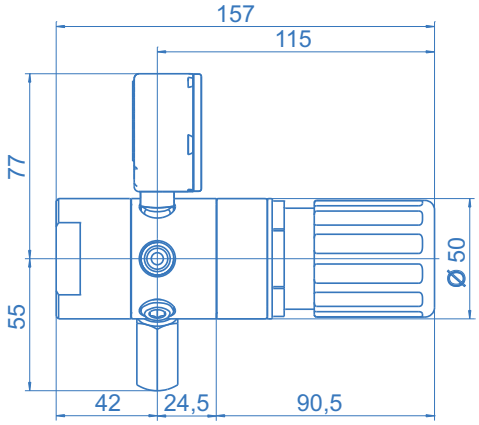

Bore template
for panel mounting

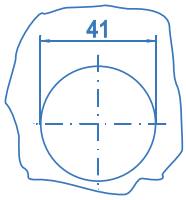

Ordering information:
Panel pressure regulator PM53

In- / outlets

CM 1/4	- 1/8" / 1/4" / 1/2" - OD compression fitting (brass)
CM 6	- 3 / 6 / 8 / 10 / 12 mm compression fitting (brass)
CE 1/4	- 1/8" / 1/4" / ½" - OD compression fitting (stainless steel)
CE 6	- 3 / 6 / 8 / 10 / 12 mm compression fitting (stainless steel)
B	- plug
A	- relief valve - 1/4" NPT-F
K	- contact gauge
M	- pressure gauge
0	- 1/4" NPT-F (port only)

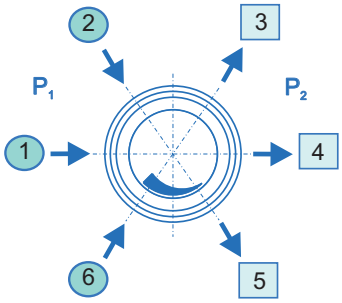

Inlet left: L

port selection

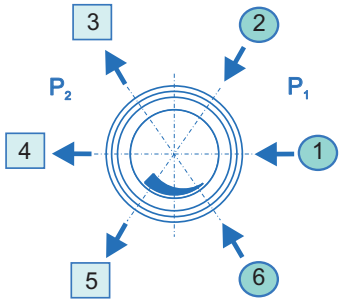

Inlet right: R

PM53 - L - 300 - 20 - 1 - 2 - 3 - 4 - 5 - 6 - N2

Inlet

L	- left
R	- right

Inlet pressure P_1

100	- max. 100 bar
200	- max. 200 bar
300	- max. 300 bar

Outlet pressure P_2

1,5	- to 1.5 bar
4	- to 4 bar
10	- to 10 bar
20	- to 20 bar

Type of gas

Please specify type of gas (for selection of valve seat materials)

For inlet pressure up to 50 bar and outlet pressure of max. 1,5 or 4 bar please use M51

P1: 300 bar
P2: 10 bar
S-Nr.:
Typ:
WIKA
bar
psi
Kl. 1,6
0
1000
2000
3000
4000
300

Pressure control panel BM55-1

Pressure control panel BM55-1
with valve in the outlet adapter

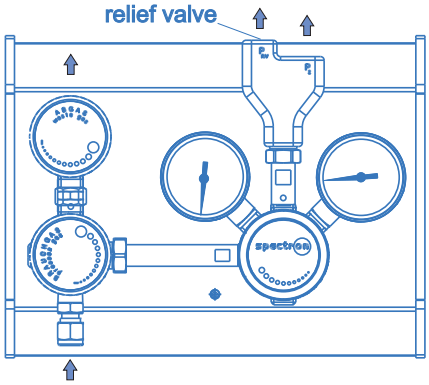

Product features

- Wall- and cabinet-mounting pressure control panels
- For non-corrosive gases up to quality 6.0
- Laboratory-style design
- Ergonomically designed
- Modular design (to be extended to 2, 3 etc. cylinders)
- Filter at the process gas inlet valve
- Diaphragm-type shut-off valves optimised for low internal volume with On/Off position indicator
- Suitable for ECD-applications
- Diaphragm-type pressure regulator with high control accuracy and anti-vibration device
- Outlet adapter with integrated relief valve and optional diaphragm-shut-off valve (this prevents the outlet piping from draining during disconnecting the panel)
- Designed for easy installation
- Approved for use with oxygen
- Suitable for inlet pressure values up to 300 bar
- Compact design especially for installation into safety cabinets for gas cylinders
- Dual-stage model: BM56-1

Technical data

Type	single-stage
Inlet pressure P_1	max. 300 bar
Outlet pressure P_2	10/20/50/100/200 bar
Materials	
Body regulator and valves:	chrome-plated brass
Valve seat regulator:	PA 11
Valve seat valves:	PVDF
Diaphragm regulator:	Hastelloy C276
Diaphragm valve:	Hastelloy C276
Soft goods:	EPDM, FKM
Filter:	Sintered SS 316L
Inlet connector	SS compression ring fitting 6x1 mm
Temperature range	-30°C to +60°C
Leak rate (to atmosphere)	$1x10^{-8}$mbar l/s He
(via seat)	$1x10^{-6}$mbar l/s He
Pressure gauges	Safety pressure gauges ISO5171/cl 1.6/NG50
Weight	4,5 kg

Flow curves BM55-1

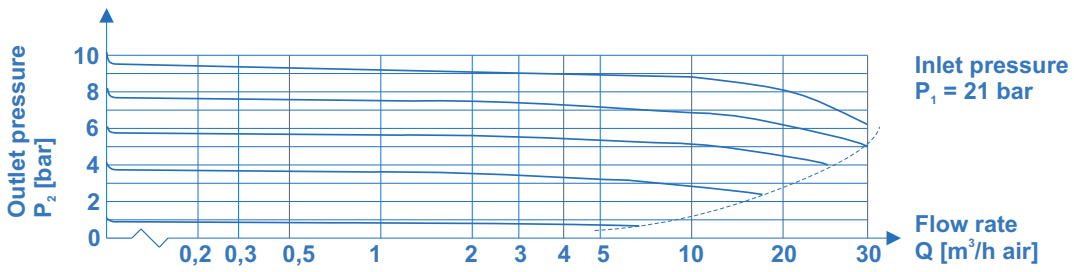

Pressure control panel BM55-1

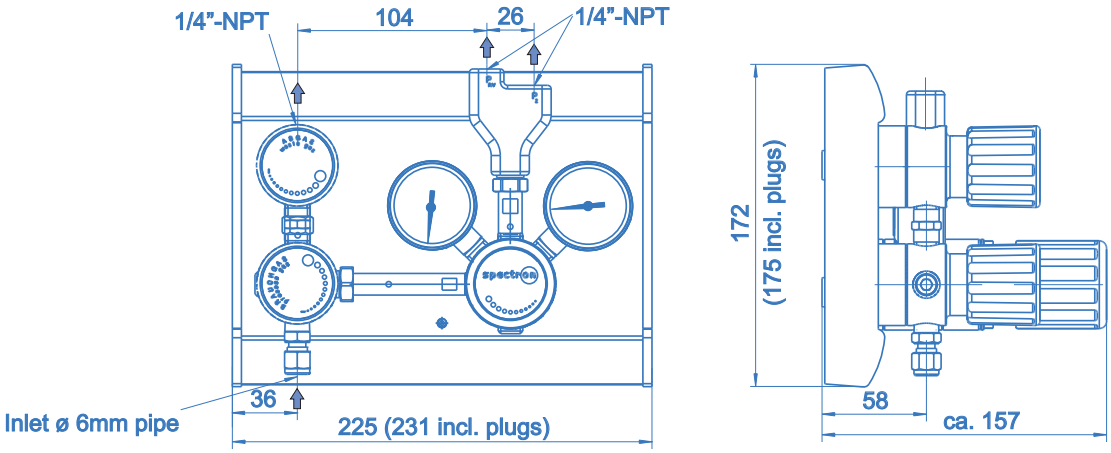

Process gas valve also with 300 bar - pneumatic-actuator upon request!

Ordering information:
Pressure control panels BM55-1

BM55 - 1 - 300 - 10 - M - M - V - N_2

Inlet pressure P_1

100 - max. 100 bar
200 - max. 200 bar
300 - max. 300 bar

Outlet pressure P_2

10 - max. 10 bar
20 - max. 20 bar
50 - max. 50 bar
100 - max. 100 bar
200 - max. 200 bar

Inlet press. indication

M - pressure gauge
K - contact pressure gauge

Gas type

Please specify gas type with your order (selection of valve seat material)

Outlet adapter

0 - without valve
V - valve (manual)
VP - pneumatic-valve

Outlet press. indication

M - pressure gauge
K - contact pressure gauge

Specifications

- SPECTROLAB - components guarantee maximum quality by using high grade materials and a quality assurance program acc. to ISO 9001.
- All components which come into contact with the medium are cleaned in an ultrasonic cleaning system (CFC-free) with the special cleaning process SPECTRO-CLEAN® and are then baked out.
- SPECTROLAB - components undergo a 100% Helium-leak-test.

Pressure indication

- All pressure reguators can be equipped with pressure gauges or contact gauges for in- and outlet pressure indication.

Important note regarding component selection

- In order to assure safe operation it is essential to take the configuration of the whole system into account when selecting a control panel.
- The function of the components, the compatibility of the materials, correlating temperature ranges, correct installation, operation and maintenance in accordance with the relevant regulations are the responsibility of the system designer and the user.

ÆRLIG INTERESSERT PRESIS

Pressure control panel BM55-2

Pressure control panel BM55-2
Outlet adapter without valve

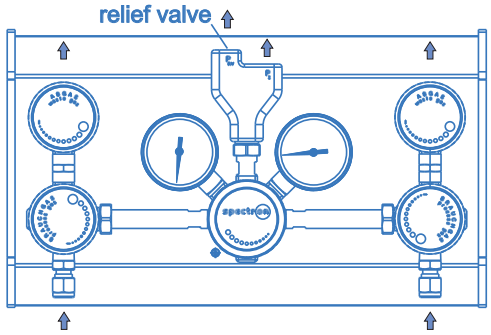

Product features

- Wall- and cabinet-mounting pressure control panels
- For non-corrosive gases up to quality 6.0
- Laboratory-style design
- Ergonomically designed
- Modular design (to be extended to 2, 3 etc. cylinders)
- Filter at the process gas inlet valve
- Diaphragm-type shut-off valves optimised for low internal volume with On/Off position indicator
- Suitable for ECD-applications
- Diaphragm-type pressure regulator with high control accuracy and anti-vibration device
- Outlet adapter with integrated relief valve and optional diaphragm-shut-off valve (this prevents the outlet piping from draining during disconnecting the panel)
- Designed for easy installation
- Approved for use with oxygen
- Suitable for inlet pressure values up to 300 bar
- Compact design especially for installation into safety cabinets for gas cylinders
- Double-stage model: BM56-2

Technical data

Type	single-stage
Inlet pressure P_1	max. 300 bar
Outlet pressure P_2	10/20/50/100/200 bar
Materials	
Body regulator and valves:	chrome-plated brass
Valve seat regulator:	PA 11
Valve seat valves:	PVDF
Diaphragm regulator:	Hastelloy C276
Diaphragm valve:	Hastelloy C276
Soft goods:	EPDM, FKM
Filter:	Sintered SS 316L
Inlet connector	SS compression ring fitting 6x1 mm
Temperature range	-30°C to +60°C
Leak rate (to atmosphere)	$1x10^{-8}$ mbar l/s He
(via seat)	$1x10^{-6}$ mbar l/s He
Pressure gauges	Safety pressure gauges ISO5171/cl 1.6/NG50
Weight	6 kg

Flow curves BM55-2

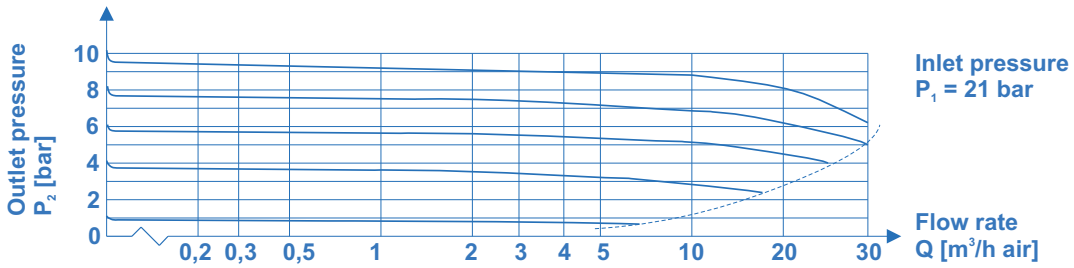

Pressure control panel BM55-2

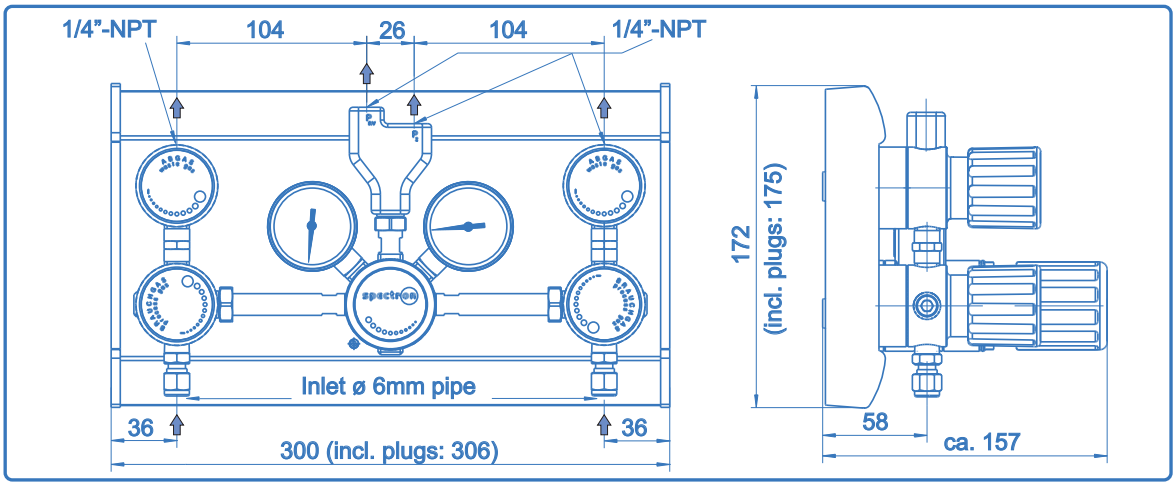

Process gas valve also with 300 bar - pneumatic-actuator upon request!

Ordering information:
Pressure control panels BM55-2

BM55 - 2 - 300 - 10 - M - M - V - N_2

Inlet pressure P_1

100 - max. 100 bar
200 - max. 200 bar
300 - max. 300 bar

Outlet pressure P_2

10 - max. 10 bar
20 - max. 20 bar
50 - max. 50 bar
100 - max. 100 bar
200 - max. 200 bar

Inlet press. indication

M - pressure gauge
K - contact pressure gauge

Gas type

Please specify gas type with your order (selection of valve seat material)

Outlet adapter

0 - without valve
V - valve (manual)
VP - pneumatic-valve

Outlet press. indication

M - pressure gauge
K - contact pressure gauge

Specifications

- SPECTROLAB - components guarantee maximum quality by using high grade materials and a quality assurance program acc. to ISO 9001.
- All components which come into contact with the medium are cleaned in an ultrasonic cleaning system (CFC-free) with the special cleaning process SPECTRO-CLEAN® and are then baked out.
- SPECTROLAB - components undergo a 100% Helium-leak-test.

Pressure indication

- All pressure reguators can be equipped with pressure gauges or contact gauges for in- and outlet pressure indication.

Important note regarding component selection

- In order to assure safe operation it is essential to take the configuration of the whole system into account when selecting a control panel.
- The function of the components, the compatibility of the materials, correlating temperature ranges, correct installation, operation and maintenance in accordance with the relevant regulations are the responsibility of the system designer and the user.

ÆRLIG INTERESSERT PRESIS

Pressure control panel BM56-1

Pressure control panel BM56-1
with valve in the outlet adapter

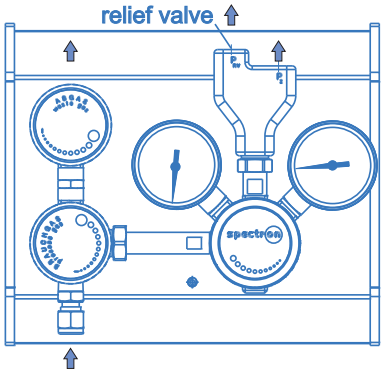

Product features

- Double-stage wall- and cabinet-mounting pressure control panels
- For non-corrosive gases up to quality 6.0
- Laboratory-style design
- Modular design (to be extended to 2, 3 etc. cylinders)
- Filter at the process gas inlet valve
- Diaphragm-type shut-off valves optimised for low internal volume with On/Off position indicator
- Suitable for ECD-applications
- Double-stage diaphragm-type pressure regulator with high control accuracy and anti-vibration device
- Outlet adapter with integrated relief valve and optional diaphragm-shut-off valve (this prevents the outlet piping from draining during disconnecting the panel)
- Designed for easy installation
- Approved for use with oxygen
- Suitable for inlet pressure values up to 300 bar
- Compact design especially for installation into safety cabinets for gas cylinders
- Single-stage model: BM55-1

Technical data

Type	double-stage
Inlet pressure P_1	max. 300 bar
Outlet pressure P_2	1,5 / 4 / 10 bar
Materials	
Body regulator and valves:	chrome-plated brass
Valve seat regulator:	PA
Valve seat valves:	PVDF
Diaphragm regulator:	Hastelloy C276
Diaphragm valve:	Hastelloy C276
Soft goods:	EPDM, FKM
Filter:	Sintered bronze B60
Inlet connector	SS compression ring fitting 6x1 mm
Temperature range	-30°C to +60°C
Leak rate (to atmosphere)	$1x10^{-8}$ mbar l/s He
(via seat)	$1x10^{-6}$ mbar l/s He
Pressure gauges	Safety pressure gauges ISO5171/cl 1.6/NG50
Weight	4,9 kg

Flow curves BM56-1

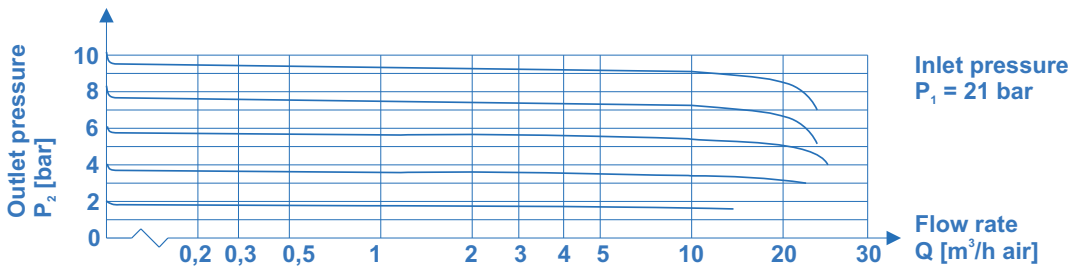

Pressure control panel BM56-1

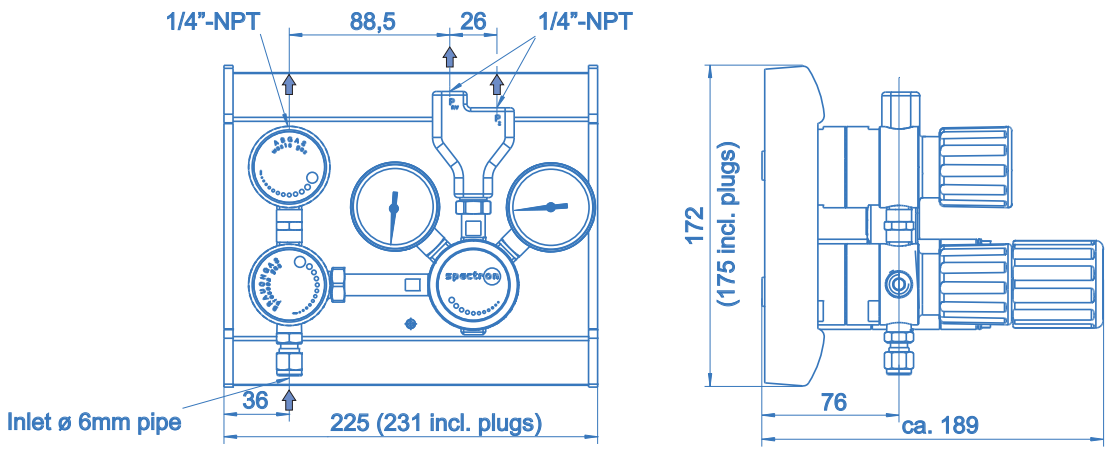

Process gas valve also with 300 bar - pneumatic-actuator upon request!

Ordering information:
Pressure control panels BM56-1

BM56 - 1 - 300 - 1,5 - M - M - V - N_2

Inlet pressure P_1

100 - max. 100 bar
200 - max. 200 bar
300 - max. 300 bar

Outlet pressure P_2

1,5 - max. 1,5 bar
4 - max. 4 bar
10 - max. 10 bar

Inlet press. indication

M - pressure gauge
K - contact pressure gauge

Gas type

Please specify gas type with your order (selection of valve seat material)

Outlet adapter

0 - without valve
V - valve (manual)
VP - pneumatic-valve

Outlet press. indication

M - pressure gauge
K - contact pressure gauge

Specifications

- SPECTROLAB - components guarantee maximum quality by using high grade materials and a quality assurance program acc. to ISO 9001.
- All components which come into contact with the medium are cleaned in an ultrasonic cleaning system (CFC-free) with the special cleaning process SPECTRO-CLEAN® and are then baked out.
- SPECTROLAB - components undergo a 100% Helium-leak-test.

Pressure indication

- All pressure reguators can be equipped with pressure gauges or contact gauges for in- and outlet pressure indication.

Important note regarding component selection

- In order to assure safe operation it is essential to take the configuration of the whole system into account when selecting a control panel.
- The function of the components, the compatibility of the materials, correlating temperature ranges, correct installation, operation and maintenance in accordance with the relevant regulations are the responsibility of the system designer and the user.

ÆRLIG INTERESSERT PRESIS

Pressure control panel BM56-2

Pressure control panel BM56-2
Outlet adapter without valve

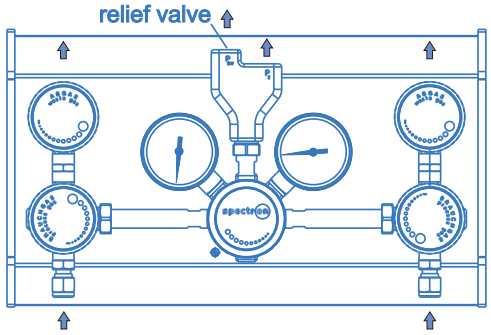

Product features

- Double-stage wall- and cabinet-mounting pressure control panels
- For non-corrosive gases up to quality 6.0
- Laboratory-style design
- Modular design (to be extended to 2, 3 etc. cylinders)
- Filter at the process gas inlet valve
- Diaphragm-type shut-off valves optimised for low internal volume with On/Off position indicator
- Suitable for ECD-applications
- Double-stage diaphragm-type pressure regulator with high control accuracy and anti-vibration device
- Outlet adapter with integrated relief valve and optional diaphragm-shut-off valve (this prevents the outlet piping from draining during disconnecting the panel)
- Designed for easy installation
- Approved for use with oxygen
- Suitable for inlet pressure values up to 300 bar
- Compact design especially for installation into safety cabinets for gas cylinders
- Single-stage model: BM55-2

Technical data

Type	double-stage
Inlet pressure P_1	max. 300 bar
Outlet pressure P_2	1,5 / 4 / 10 bar
Materials	
Body regulator and valves:	chrome-plated brass
Valve seat regulator:	PA
Valve seat valves:	PVDF
Diaphragm regulator:	Hastelloy C276
Diaphragm valve:	Hastelloy C276
Soft goods:	EPDM, FKM
Filter:	Sintered bronze B60
Inlet connector	SS compression ring fitting 6x1 mm
Temperature range	-30°C to +60°C
Leak rate (to atmosphere)	$1x10^{-8}$ mbar l/s He
(via seat)	$1x10^{-6}$ mbar l/s He
Pressure gauges	Safety pressure gauges ISO5171/cl 1.6/NG50
Weight	6,5 kg

Flow curves BM56-2

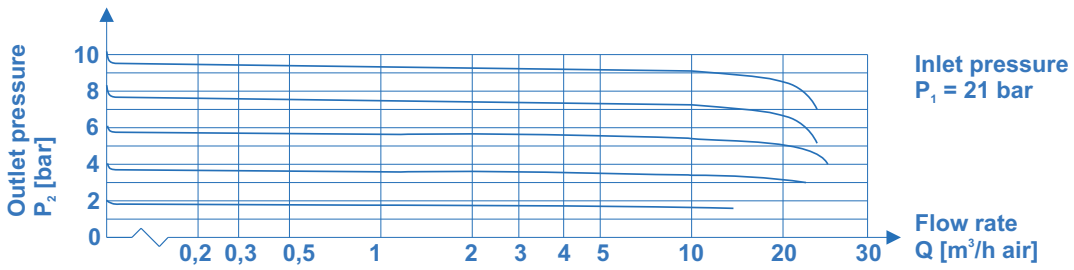

GASSENTRAL

BM56-2

Pressure control panel BM56-2

spectrolab

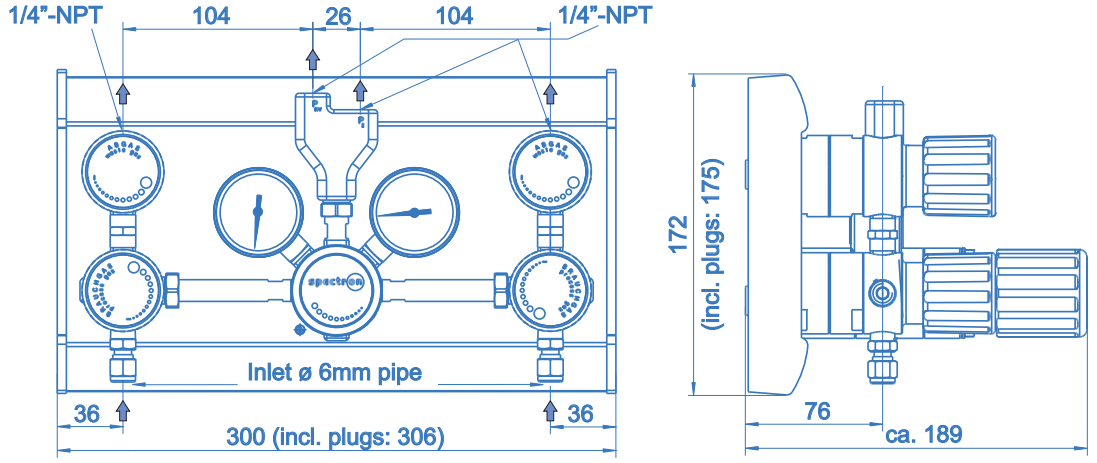

Process gas valve also with 300 bar - pneumatic-actuator upon request!

Ordering information:
Pressure control panels BM56-2

BM56 - 2 - 300 - 1,5 - M - M - V - N_2

Inlet pressure P_1

100 - max. 100 bar
200 - max. 200 bar
300 - max. 300 bar

Outlet pressure P_2

1,5 - max. 1,5 bar
4 - max. 4 bar
10 - max. 10 bar

Inlet press. indication

M - pressure gauge
K - contact pressure gauge

Gas type

Please specify gas type with your order (selection of valve seat material)

Outlet adapter

0 - without valve
V - valve (manual)
VP - pneumatic-valve

Outlet press. indication

M - pressure gauge
K - contact pressure gauge

Specifications

- SPECTROLAB - components guarantee maximum quality by using high grade materials and a quality assurance program acc. to ISO 9001.
- All components which come into contact with the medium are cleaned in an ultrasonic cleaning system (CFC-free) with the special cleaning process SPECTRO-CLEAN® and are then baked out.
- SPECTROLAB - components undergo a 100% Helium-leak-test.

Pressure indication

- All pressure reguators can be equipped with pressure gauges or contact gauges for in- and outlet pressure indication.

Important note regarding component selection

- In order to assure safe operation it is essential to take the configuration of the whole system into account when selecting a control panel.
- The function of the components, the compatibility of the materials, correlating temperature ranges, correct installation, operation and maintenance in accordance with the relevant regulations are the responsibility of the system designer and the user.

ÆRLIG INTERESSERT PRESIS

GASSENTRAL

BM55-2U

Pressure control panel BM55-2U

spectro lab

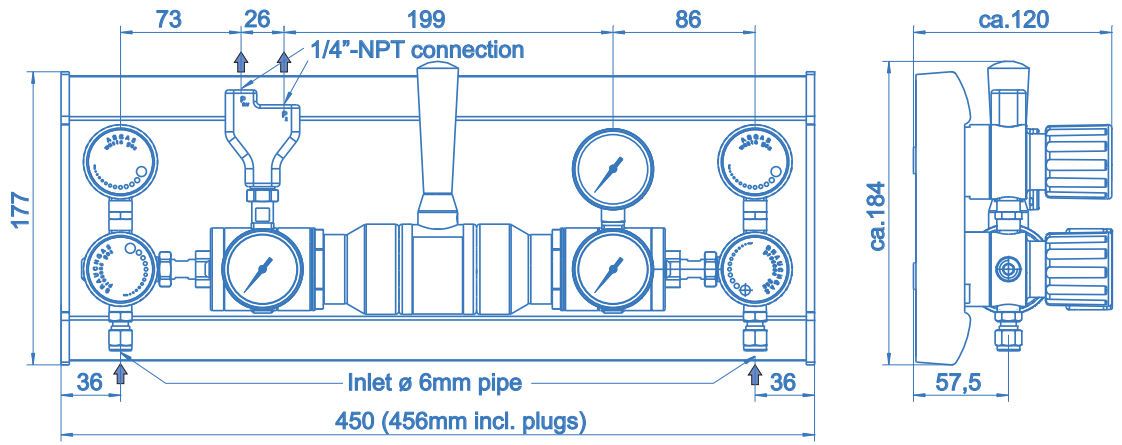

Process gas valve also with 300 bar - pneumatic-actuator upon request!

Ordering information:
Pressure control panels BM55-2U

BM55 - 2U - 300 - 10 - M - M - V - N_2

Inlet pressure P_1

100 - max. 100 bar
200 - max. 200 bar
300 - max. 300 bar

Outlet pressure P_2

10 - max. 10 bar (middle position = 10 bar; $P_{2\,max\,/\,min}$ = ± 1,5 bar)
20 - max. 20 bar (middle position = 20 bar; $P_{2\,max\,/\,min}$ = ± 1,5 bar)
50 - max. 50 bar (middle position = 50 bar; $P_{2\,max\,/\,min}$ = ± 5 bar)
100 - max. 100 bar (middle position = 100 bar; $P_{2\,max\,/\,min}$ = ± 10 bar)
200 - max. 200 bar (middle position = 200 bar; $P_{2\,max\,/\,min}$ = ± 10 bar)

Inlet press. indication

M - pressure gauge
K - contact pressure gauge

Gas type

Please specify gas type with your order (selection of valve seat material)

Outlet adapter

0 - without valve
V - valve (manual)
VP - pneumatic-valve

Outlet press. indication

M - pressure gauge
K - contact pressure gauge

Specifications

- SPECTROLAB - components guarantee maximum quality by using high grade materials and a quality assurance program acc. to ISO 9001.
- All components which come into contact with the medium are cleaned in an ultrasonic cleaning system (CFC-free) with the special cleaning process SPECTRO-CLEAN® and are then baked out.
- SPECTROLAB - components undergo a 100% Helium-leak-test.

Pressure indication

- All pressure reguators can be equipped with pressure gauges or contact gauges for in- and outlet pressure indication.

Important note regarding component selection

- In order to assure safe operation it is essential to take the configuration of the whole system into account when selecting a control panel.
- The function of the components, the compatibility of the materials, correlating temperature ranges, correct installation, operation and maintenance in accordance with the relevant regulations are the responsibility of the system designer and the user.

GASSENTRAL

BM55-2U

Pressure control panel BM55-2U

Pressure control panel BM55-2U
Outlet adapter without valve

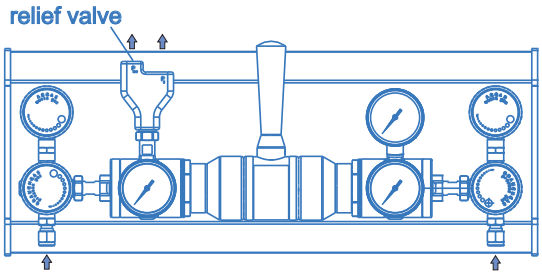

Product features

- Wall- and cabinet-mounting pressure control panels with automatic change-over function
- For non-corrosive gases up to quality 6.0
- Laboratory-style design
- Ergonomically designed
- Modular design (to be extended to 2, 3 etc. cylinders)
- Filter at the process gas inlet valve
- Diaphragm-type shut-off valves optimised for low internal volume with On/Off position indicator
- Suitable for ECD-applications
- Diaphragm-type pressure regulator with high control accuracy and anti-vibration device
- Outlet adapter with integrated relief valve and optional diaphragm-shut-off valve (this prevents the outlet piping from draining during disconnecting the panel)
- Designed for easy installation
- Approved for use with oxygen
- Compact design especially for installation into safety cabinets for gas cylinders
- Minimised pressure difference between left and right hand side outlet pressure
- Double-stage model: BM56-2U

Technical data

Type	single-stage
Inlet pressure P_1	max. 300 bar
Outlet pressure P_2	10/20/50/100/200 bar
Materials	
Body regulator and valves:	chrome-plated brass
Valve seat regulator:	PA 11
Valve seat valves:	PVDF
Diaphragm regulator:	Hastelloy C276
Diaphragm valve:	Hastelloy C276
Soft goods:	EPDM, FKM
Filter:	Sintered SS 316L
Inlet connector	SS compression ring fitting 6x1 mm
Temperature range	-30°C to +60°C
Leak rate (to atmosphere)	$1x10^{-8}$ mbar l/s He
(via seat)	$1x10^{-6}$ mbar l/s He
Pressure gauges	Safety pressure gauges ISO5171/cl 1.6/NG50
Weight	7,7 kg

Flow curves BM55-2U

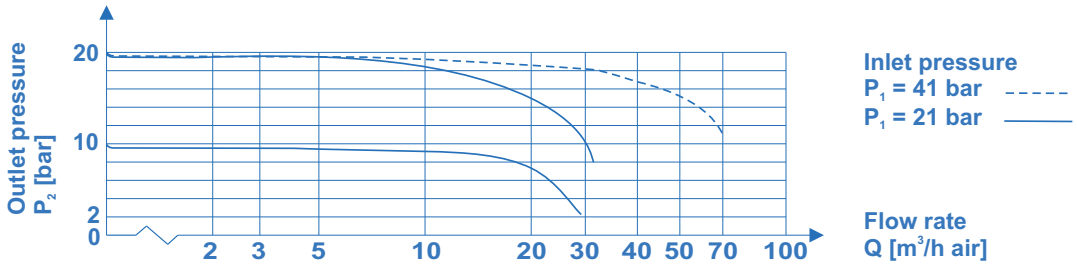

ÆRLIG INTERESSERT PRESIS

Pressure control panel BM56-2U

Pressure control panel BM56-2U

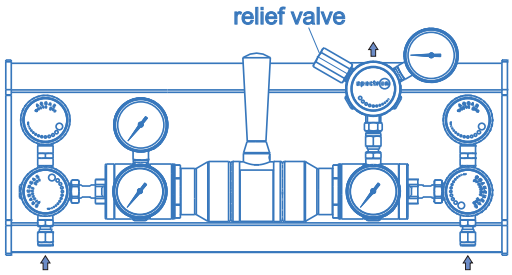

Product features

- Double-stage wall- and cabinet-mounting pressure control panels with automatic change-over function
- For non-corrosive gases up to quality 6.0
- Laboratory-style design
- Ergonomically designed
- Modular design (to be extended to 2, 3 etc. cylinders)
- Filter at the process gas inlet valve
- Diaphragm-type shut-off valves optimised for low internal volume with On/Off position indicator
- Suitable for ECD-applications
- Double stage pressure control with 3 diaphragm-type pressure regulators with high control accuracy, anti-vibration device and integrated relief valve
- Designed for easy installation
- Approved for use with oxygen
- Compact design especially for installation into safety cabinets for gas cylinders
- Minimised pressure difference between left and right hand side outlet pressure
- Single-stage model: BM55-2U

Technical data

Type	double-stage
Inlet pressure P_1	max. 300 bar
Outlet pressure P_2	1,5 / 4 / 10 bar
Materials	
Body regulator and valves:	chrome-plated brass
Valve seat regulator:	PA 11
Valve seat valves:	PVDF
Diaphragm regulator:	Hastelloy C276
Diaphragm valve:	Hastelloy C276
Soft goods:	EPDM, FKM
Filter:	Sintered bronze B60
Inlet connector	SS compression ring fitting 6x1 mm
Temperature range	-30°C to +60°C
Leak rate (to atmosphere)	$1x10^{-8}$ mbar l/s He
(via seat)	$1x10^{-6}$ mbar l/s He
Pressure gauges	Safety pressure gauges ISO5171/cl 1.6/NG50
Weight	8,7 kg

Flow curves BM56-2U

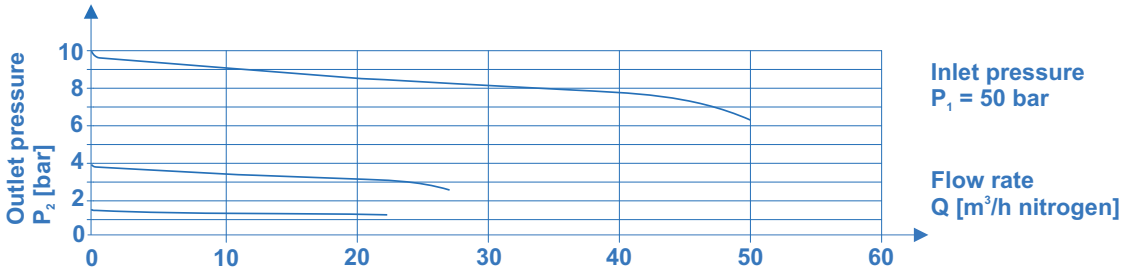

GASSENTRAL

BM56-2U

Pressure control panel BM56-2U

spectrolab

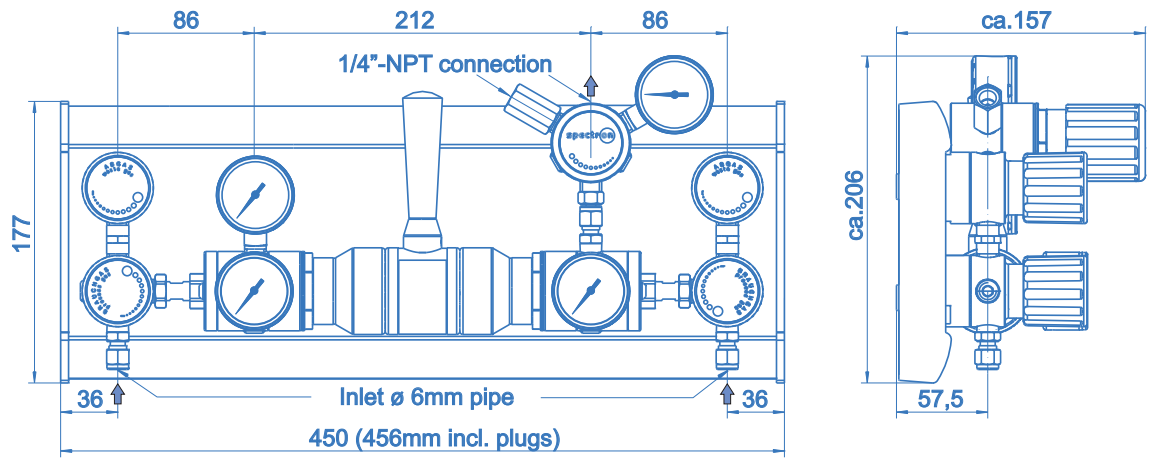

Process gas valve also with 300 bar - pneumatic-actuator upon request!

Ordering information:
Pressure control panels BM56-2U

BM56 - 2U - 300 - 1,5 - M - M - N_2

Inlet pressure P_1

100 - max. 100 bar
200 - max. 200 bar
300 - max. 300 bar

Outlet pressure P_2

1,5 - max. 1,5 bar
4 - max. 4 bar
10 - max. 10 bar

Inlet press. indication

M - pressure gauge
K - contact pressure gauge

Gas type

Please specify gas type with your order (selection of valve seat material)

Outlet press. indication

M - pressure gauge
K - contact pressure gauge

Specifications

- SPECTROLAB - components guarantee maximum quality by using high grade materials and a quality assurance program acc. to ISO 9001.
- All components which come into contact with the medium are cleaned in an ultrasonic cleaning system (CFC-free) with the special cleaning process SPECTRO-CLEAN® and are then baked out.
- SPECTROLAB - components undergo a 100% Helium-leak-test.

Pressure indication

- All pressure reguators can be equipped with pressure gauges or contact gauges for in- and outlet pressure indication.

Important note regarding component selection

- In order to assure safe operation it is essential to take the configuration of the whole system into account when selecting a control panel.
- The function of the components, the compatibility of the materials, correlating temperature ranges, correct installation, operation and maintenance in accordance with the relevant regulations are the responsibility of the system designer and the user.

ÆRLIG INTERESSERT PRESIS

GASSENTRAL

BM55-2A

Pressure control panel BM55-2A

Pressure control panel BM55-2A
without outlet pressure connection

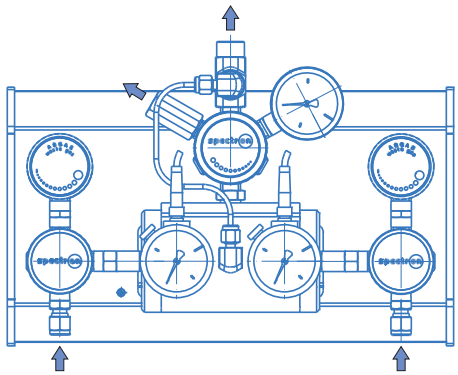

Product features

- Wall- and cabinet-mounting pressure control panels with fully automatic change-over function
- For non-corrosive gases up to quality 5.0
- No pressure difference between the two gas source sides due to Ambimat
- Maximum emptying of the gas cylinders
- Laboratory-style design
- Ergonomically designed
- Modular design (to be extended to 2, 3 etc. cylinders)
- Filter at the process gas inlet valve
- Diaphragm-type shut-off valves optimised for low internal volume with On/Off position indicator
- Diaphragm-type pressure regulator with high control accuracy and anti-vibration device
- Designed for easy installation
- Approved for use with oxygen
- Suitable for inlet pressure values up to 300 bar
- Compact design especially for installation into safety cabinets for gas cylinders

Technical data

Type	single-stage
Inlet pressure P_1	max. 300 bar
Outlet pressure P_2	max. 10 / 20 / 50 / 100 / 200 bar
Materials	
Body regulator and valves:	chrome-plated brass
Valve seat regulator:	PA 11
Valve seat valves:	PVDF
Diaphragm regulator:	Hastelloy C276
Diaphragm valve:	Hastelloy C276
Soft goods:	EPDM, FKM
Filter pressure regulator:	Sintered SS 316L
Filter Ambimat:	Sintered bronze
Inlet connector	SS compression ring fitting 6x1 mm
Temperature range	-15°C to +60°C
Leak rate (to atmosphere)	$1x10^{-8}$ mbar l/s He
(via seat)	$1x10^{-6}$ mbar l/s He
Pressure gauges	Safety pressure gauges ISO5171/cl 1.6/NG50
Weight	ca. 10 kg

Flow curves BM55-2A

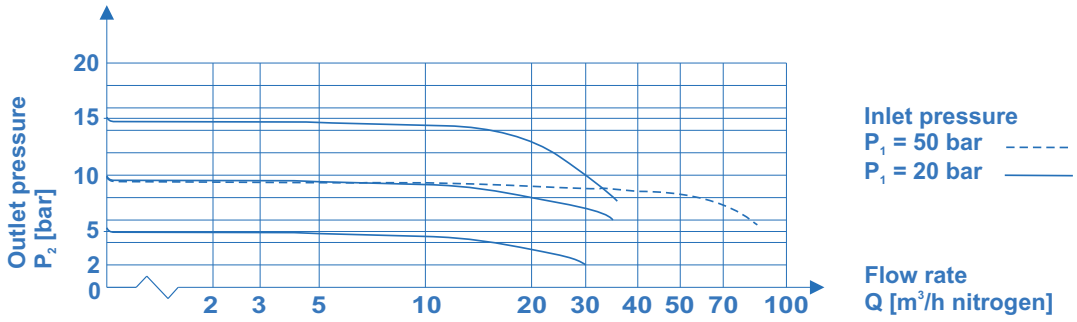

High pressure panel BM50-1+2

High pressure panel BM50-1

High pressure panel BM50-2

Product features

- Wall- and cabinet-mounting high pressure panels
- For non-corrosive gases up to quality 6.0
- Laboratory-style design
- Ergonomically designed
- Modular design (to be extended to 2, 3 etc. cylinders)
- Filter at the process gas inlet valve
- Diaphragm-type shut-off valves optimised for low internal volume with On/Off position indicator
- Pressure gauge (optional)
- Suitable for ECD-applications
- Designed for easy installation
- Approved for use with oxygen
- Suitable for inlet pressure values up to 300 bar
- Compact design

Technical data

Type		withour regulator
Working pressure P		max. 300 bar
Materials		
Body:		chrome-plated brass
Valve seat valves:		PVDF
Diaphragm valve:		Hastelloy C276
Filter:		Sintered bronze
Inlet connector		SS compression ring fitting 6x1 mm
Temperature range		-30°C to +60°C
Leak rate	(to atmosphere)	$1x10^{-8}$mbar l/s He
	(via seat)	$1x10^{-6}$mbar l/s He
Weight	BM50-1:	3,3 kg
	BM50-2:	5,3 kg

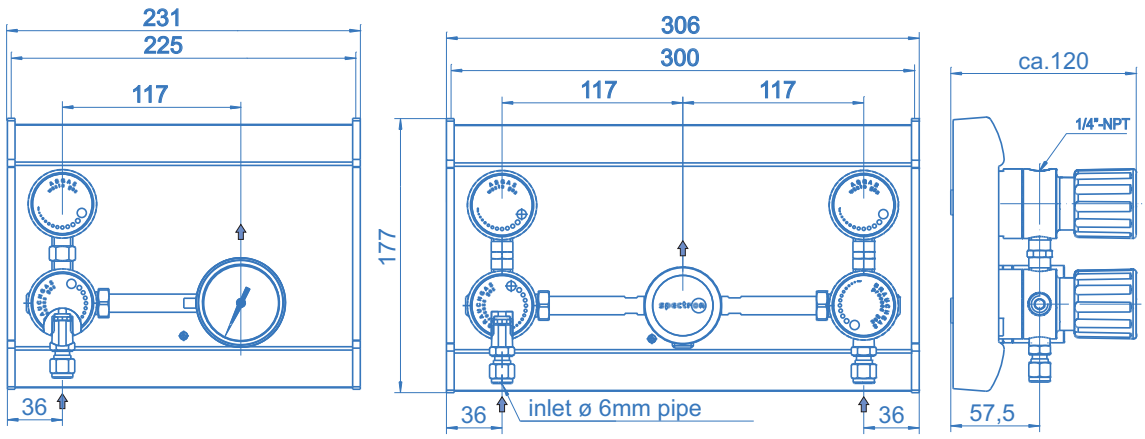

ÆRLIG INTERESSERT PRESIS

Extensions BM55+56-E

Extensions BM55-E

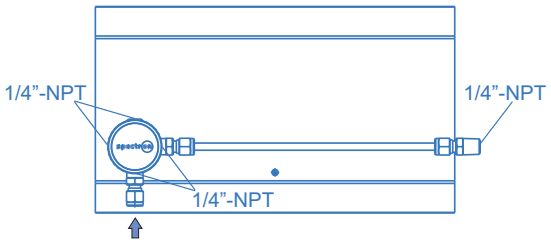

Product features

- Extension modules for pressure control panels Spectrolab BM55 and BM56 series
- For non-corrosive gases up to quality 6.0
- Laboratory-style design
- Designed for easy installation
- With filter at the inlet of the individual extension modules

Technical data

Inlet pressure P_1	max. 300 bar
Materials	
Manifold body:	chrome-plated brass
Filter:	Sintered SS 316L
Inlet connection	SS compression ring fitting 6x1 mm
Temperature range	-30°C to +60°C
Weight	approx. 1 kg per side

Extensions right and left for pressure control panels BM55 and BM56 with **connection block**:

BM55-E-**LH**-CB BM55-E-**RH**-CB BM**55**-E-LH-CB BM**56**-E-LH-CB

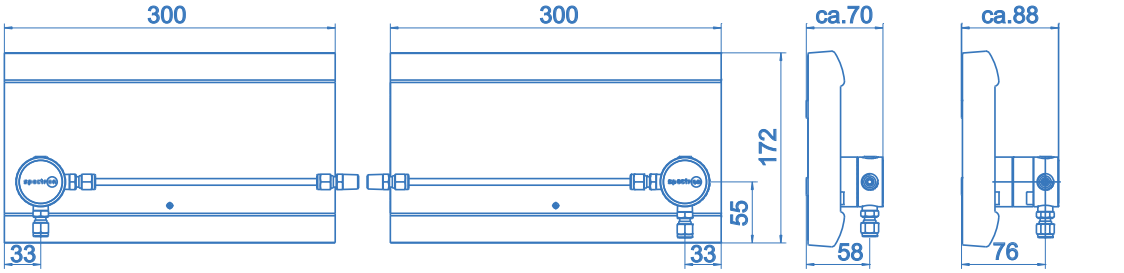

Extensions right and left for pressure control panels BM55 and BM56 with **valve**:

BM55-E-**LH**-V BM55-E-**RH**-V BM**55**-E-LH-V BM**56**-E-LH-V

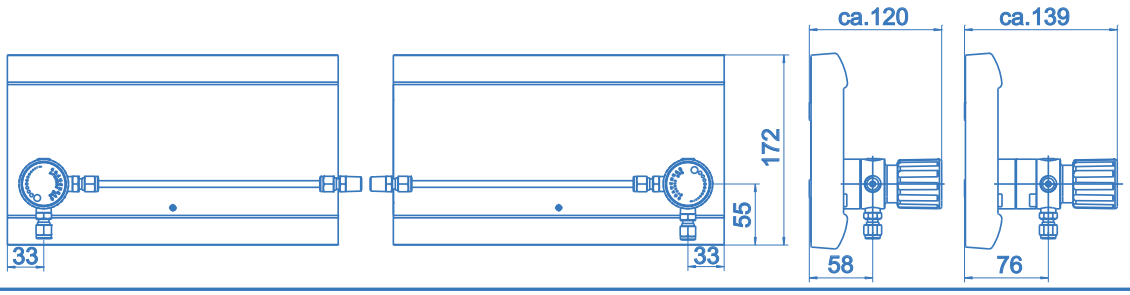

Extensions BM55+56-E

Extension modules completely assembled
Example: pressure control panel BM55-2
with BM55-E-LH-CB and BM55-E-RH-CB

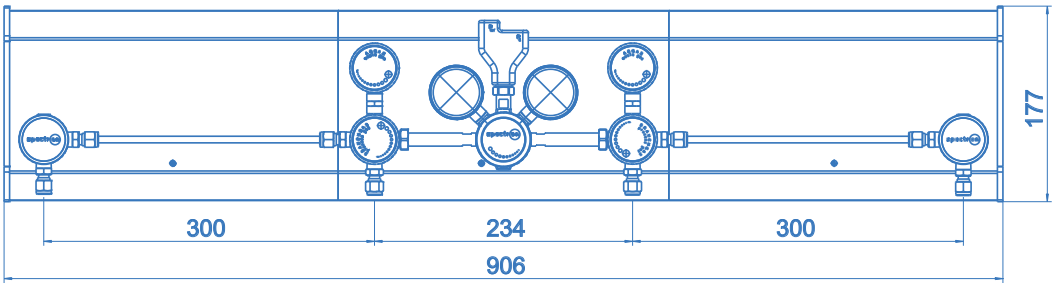

Ordering information:
Extensions BM55+56-E

BM55 - E - LH - CB

Type

55 - single-stage pressure control panel BM55 or BM56-2U
56 - double-stage pressure control panel BM56-1 and BM56-2

Side

RH - right
LH - left

Inlet

CB - connection block
V - valvel (manual)
VP - pneumatic-valve

Specifications

- SPECTROLAB - components guarantee maximum quality by using high grade materials and a quality assurance program acc. to ISO 9001.
- All components which come into contact with the medium are cleaned in an ultrasonic cleaning system (CFC-free) with the special cleaning process SPECTRO-CLEAN® and are then baked out.
- SPECTROLAB - components undergo a 100% Helium-leak-test.

Important note regarding component selection

- In order to assure safe operation it is essential to take the configuration of the whole system into account when selecting system components.
- The function of the components, the compatibility of the materials, correlating temperature ranges, correct installation, operation and maintenance in accordance with the relevant regulations are the responsibility of the system designer and the user.

ÆRLIG
INTERESSERT
PRESIS

Pressure control panel BM65-1

Pressure control panel BM65-1
with outlet connection

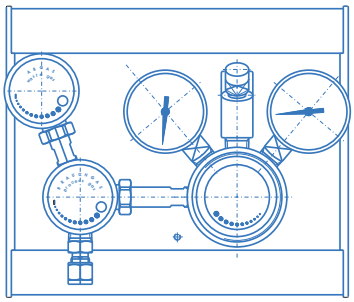

Product features

- Wall- and cabinet-mounting pressure control panels
- For non-corrosive gases up to quality 6.0
- Laboratory-style design
- Ergonomically designed
- Modular design (to be extended to 2, 3 etc. cylinders)
- Filter at the process gas inlet valve
- Diaphragm-type shut-off valves optimised for low internal volume with On/Off position indicator
- Suitable for ECD-applications
- Regulator with high control accuracy and integrated relief valve
- Designed for easy installation
- Tested for use with oxygen
- Suitable for inlet pressure values up to 300 bar
- Compact design especially for installation into safety cabinets for gas cylinders
- Models for outlet pressure values of up to 50 and 100 bar
  available (piston type regulators)
- For dual-stage models see data sheet BM66-1

Technical data

Type	single-stage
Inlet pressure P_1	max. 300 bar
Outlet pressure P_2	10 / 20 / 50 / 100 bar
Materials	
Body regulator and valves:	chrome-plated brass
Valve seat regulator:	PA 11
Valve seat shut-off valve:	PVDF
Diaphragm regulator:	SS 301 (SS 1.4310)
Diaphragm valve:	Hastelloy C276
Piston (P_2 = 50 / 100 bar):	brass
Soft goods:	Viton (FKM)
Filter:	Sintered SS 316L
Inlet connector	SS compression ring fitting 6x1 mm
Temperature range	-30°C to +60°C
Leak rate (to atmosphere)	$1x10^{-8}$mbar l/s He
(via seat)	$1x10^{-6}$mbar l/s He
Pressure gauges	Safety pressure gauges ISO5171/cl 1.6/NG50
Weight	4 kg

Flow curves BM65

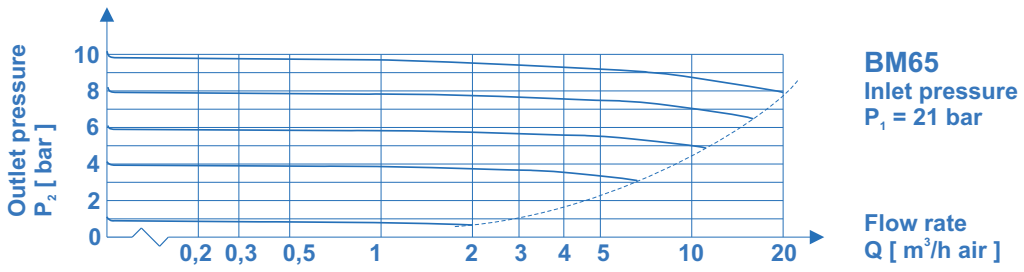

Pressure control panel BM65-1

spectrolab

Dimensions

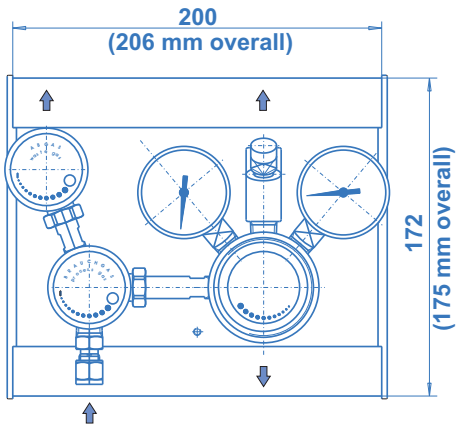

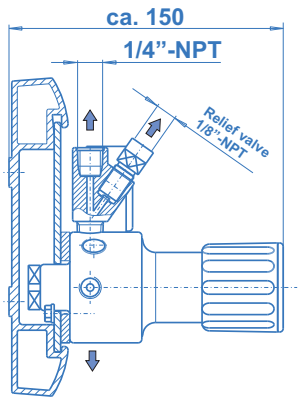

Ordering information:
Pressure control panels BM65-1

BM65 - 1 - 300 - 10 - M - M - N_2

Type

65 - single-stage control panel
66 - dual-stage control panel

Inlet pressure P_1

300 - max. 300 bar

Outlet pressure P_2

4 - up to 4 bar (dual-stage)
10 - up to 10 bar
20 - up to 20 bar
50 - up to 50 bar (piston type pressure regulator)
100 - up to 100 bar (piston type pressure regulator)

Gas type

Please specify gas type with your order (selection of valve seat material)

Outlet press. indication

M - pressure gauge
K - contact pressure gauge

Inlet press. indication

M - pressure gauge
K - contact pressure gauge

Specifications

- SPECTROLAB - components guarantee maximum quality by using high grade materials and a quality assurance program acc. to ISO 9001.
- All components which come into contact with the medium are cleaned in an ultrasonic cleaning system (CFC-free) with the special cleaning process SPECTRO-CLEAN® and are then baked out.
- SPECTROLAB - components undergo a 100% Helium-leak-test.

Pressure indication

- All pressure reguators can be equipped with pressure gauges or contact gauges for in- and outlet pressure indication.

Important note regarding component selection

- In order to assure safe operation it is essential to take the configuration of the whole system into account when selecting a control panel.
- The function of the components, the compatibility of the materials, correlating temperature ranges, correct installation, operation and maintenance in accordance with the relevant regulations are the responsibility of the system designer and the user.

ÆRLIG INTERESSERT PRESIS

Pressure control panel BM66-1

Pressure control panel BM66-1

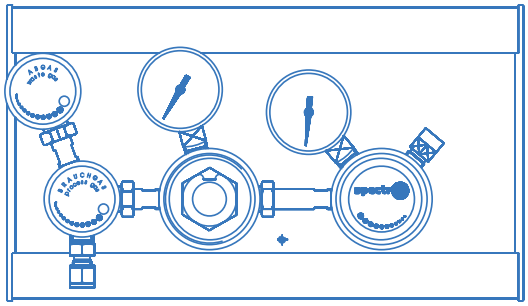

Product features

- Double stage wall- and cabinet-mounting pressure control panels
- For non-corrosive gases up to quality 6.0
- Laboratory-style design
- Ergonomically designed
- Modular design (to be extended to 2x2, 2x3 etc. cylinders)
- Filter at the process gas inlet valve
- Diaphragm-type shut-off valves optimised for low internal volume with On/Off position indicator
- Suitable for ECD-applications
- 2 pressure regulators with very high control accuracy and integrated relief valve
- Designed for easy installation
- Tested for use with oxygen
- Suitable for inlet pressure values up to 300 bar
- Compact design especially for installation into safety cabinets for gas cylinders

Technical data

Type:	double-stage
Inlet pressure P_1:	max. 300 bar
Outlet pressure P_2:	1.5 / 4 / 10 bar
Materials:	
Body regulator and valves:	chrome-plated brass
Valve seat regulator:	PA 11
Valve seat valves:	PVDF
Diaphragm regulator:	SS 301 (SS 1.4310)
Diaphragm valve:	Hastelloy C276
Soft goods:	Viton (FKM)
Filter:	sintered SS 316L
Inlet connector:	SS compression fitting 6x1 mm
Temperature range:	-30°C to +60°C
Leak rate: (to atmosphere)	$1x10^{-8}$mbar l/s He
(via seat)	$1x10^{-6}$mbar l/s He
Pressure gauge:	Safety pressure gauges ISO5171/KI1.6/NG50
Weight:	approx. 6 kg

Flow curves BM66

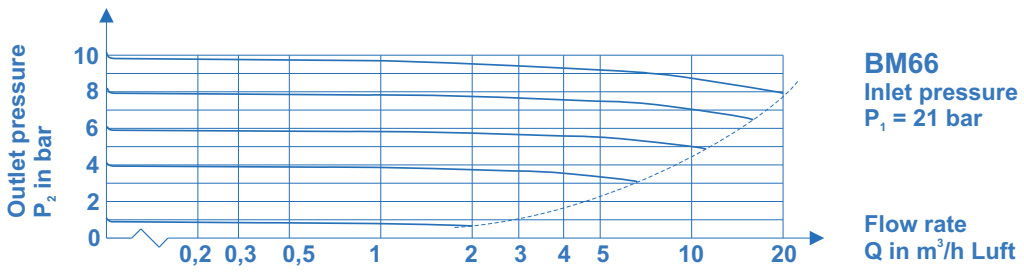

Pressure control panel BM66-1

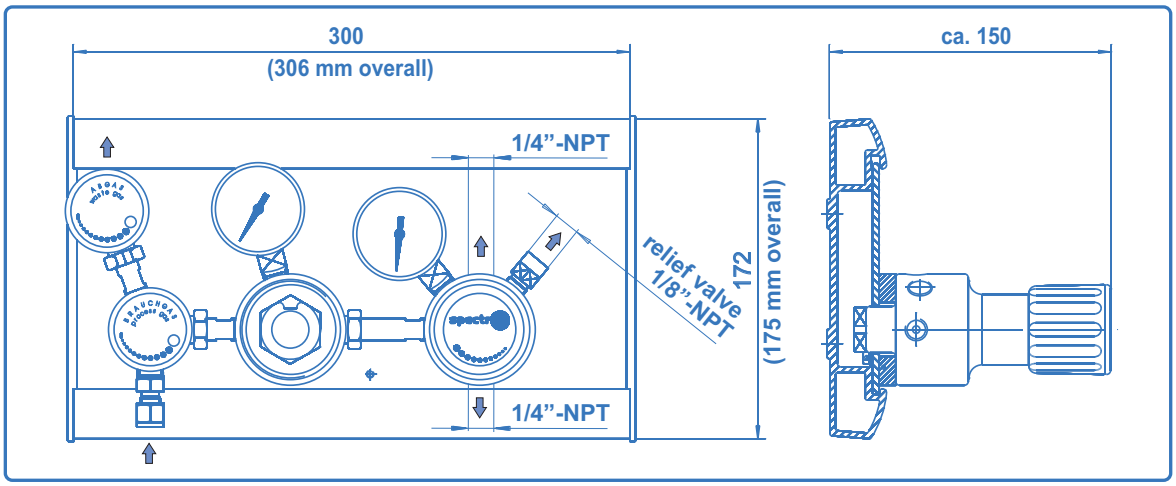

Ordering information:
Pressure control panels BM66-1

BM - 66 - 1 - 300 - 10 - M - M - O - N_2

Please specify gas type with your order (valve seat material)

Inlet pressure P_1

300 - max. 300 bar

Outlet pressure P_2

1,5 - max. 1,5 bar
4 - max. 4 bar
10 - max. 10 bar

Vordruckanzeige

M - pressure gauge
K - contact gauge

Gas type

Please specify gas type with your order (selection of valve seat material)

Outlet

O - top
U - bottom

Outlet press. indication

M - pressure gauge
K - contact gauge

Specifications

- SPECTROLAB - components guarantee maximum quality by using high grade materials and a quality assurance program acc. to ISO 9001.
- All components which come into contact with the medium are cleaned in an ultrasonic cleaning system (CFC-free) with the special cleaning process SPECTRO-CLEAN® and are then baked out.
- SPECTROLAB - components undergo a 100% function- and Helium-leak-test.

Pressure indication

- All pressure reguators can be equipped with pressure gauges or contact gauges for in- and outlet pressure indication.

Important note regarding component selection

- In order to assure safe operation it is essential to take the configuration of the whole system into account when selecting a control panel.
- The function of the components, the compatibility of the materials, correlating temperature ranges, correct installation, operation and maintenance in accordance with the relevant regulations are the responsibility of the system designer and the user.

ÆRLIG INTERESSERT PRESIS

Pressure control panel BM65-2

Pressure control panel BM65-2
with outlet fitting

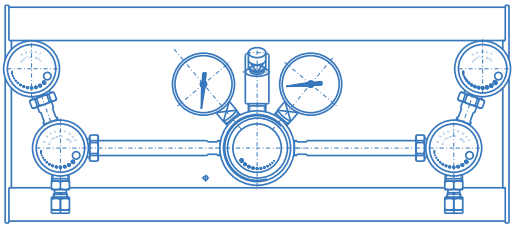

Product features

- Wall- and cabinet-mounting pressure control panels
- For non-corrosive gases up to quality 6.0
- Laboratory-style design
- Ergonomically designed
- Modular design (to be extended to 2x2, 2x3 etc. cylinders)
- Filter at the process gas inlet valve
- Diaphragm-type shut-off valves optimised for low internal volume with On/Off position indicator
- Suitable for ECD-applications
- Regulator with high control accuracy and integrated relief valve
- Designed for easy installation
- Tested for use with oxygen
- Suitable for inlet pressure values up to 300 bar
- Compact design especially for installation into safety cabinets for gas cylinders
- Models for outlet pressure values of up to 50 and 100 bar available (piston type regulators)
- Dual-stage models: see BM66-2

Technical data

Type	single-stage
Inlet pressure P_1	max. 300 bar
Outlet pressure P_2	10/20/50/100 bar
Materials	
Body regulator and valves:	chrome-plated brass
Valve seat regulator:	PA 11
Valve seat shut-off valve:	PVDF
Diaphragm regulator:	SS 301 (SS 1.4310)
Diaphragm valve:	Hastelloy C276
Piston (P_2=50/100bar):	brass
Soft goods:	Viton (FKM)
Filter:	Sintered SS 316L
Inlet connector	SS compression ring fitting 6x1 mm
Temperature range	-30°C to +60°C
Leak rate (to atmosphere)	$1x10^{-8}$mbar l/s He
(via seat)	$1x10^{-6}$mbar l/s He
Pressure gauges	Safety pressure gauges ISO5171/cl 1.6/NG50
Weight	6 kg

Flow curves BM65

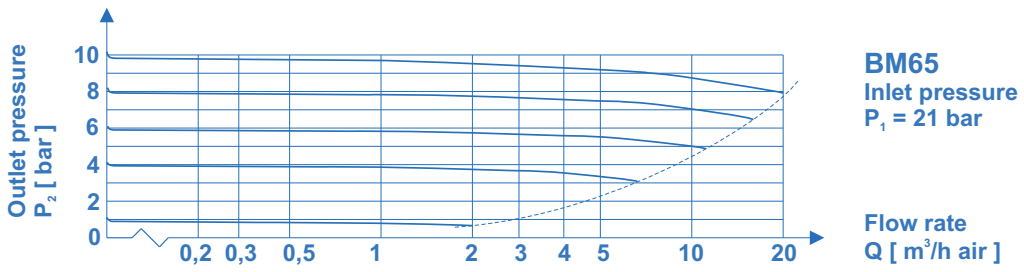

Pressure control panel BM65-2

spectro lab

Dimensions

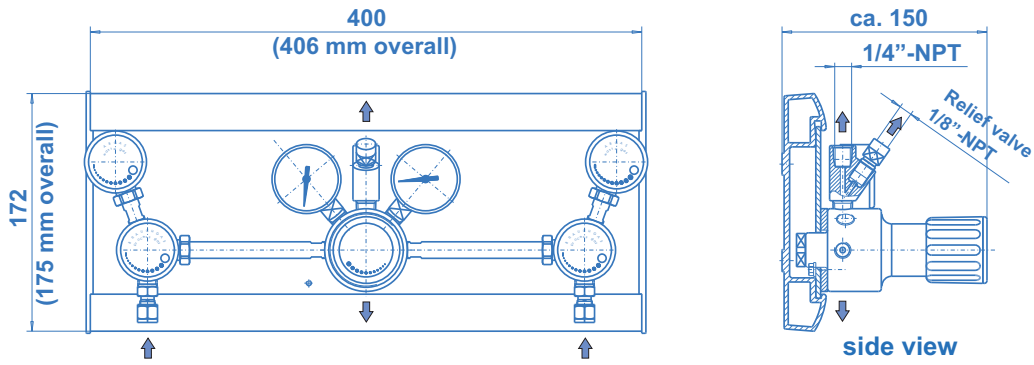

Additional configurations upon request!

Ordering information:
Pressure control panels BM65-2

BM - 65 - 2 - 300 - 10 - M - M - N_2

Please specify gas type with your order

Type

65 - single-stage control panel
66 - dual-stage control panel

Inlet pressure P_1

300 - max. 300 bar

Outlet pressure P_2

4 - up to 4 bar (dual-stage)
10 - up to 10 bar
20 - up to 20 bar
50 - up to 50 bar (piston type regulator)
100 - up to 100 bar (piston type regulator)

Gas type

Please specify gas type with your order (selection of valve seat material)

Outlet press.

M - pressure gauge
K - Contact gauge

Inlet press. indication

M - pressure gauge
K - Contact gauge

Specifications

- SPECTROLAB - components guarantee maximum quality by using high grade materials and a quality assurance program acc. to ISO 9001.
- All components which come into contact with the medium are cleaned in an ultrasonic cleaning system (CFC-free) with the special cleaning process SPECTRO-CLEAN® and are then baked out.
- SPECTROLAB - components undergo a 100% Helium-leak-test.

Pressure indication

- All pressure reguators can be equipped with pressure gauges or contact gauges for in- and outlet pressure indication.

Important note regarding component selection

- In order to assure safe operation it is essential to take the configuration of the whole system into account when selecting a control panel.
- The function of the components, the compatibility of the materials, correlating temperature ranges, correct installation, operation and maintenance in accordance with the relevant regulations are the responsibility of the system designer and the user.

ÆRLIG INTERESSERT PRESIS

GASSENTRAL

BM65-2U

Pressure control panel BM65-2U

Pressure control panel BM65-2U
with outlet connection

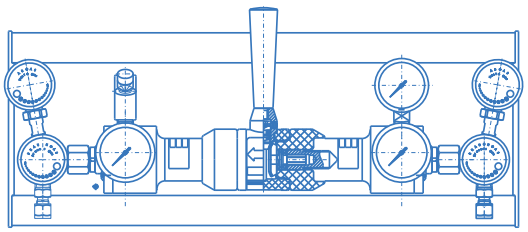

Product features

- Wall- and cabinet-mounting pressure control panels with automatic change-over function
- For non-corrosive gases up to quality 6.0
- Simple outlet pressure adjustment
- Minimised pressure difference between left and right hand side outlet pressure
- Laboratory-style design
- Ergonomically designed
- Modular design (to be extended to 2x2, 2x3 etc. cylinders)
- Filter at the process gas inlet valve
- Diaphragm-type shut-off valves optimised for low internal volume with On/Off position indicator
- Suitable for ECD-applications
- Regulator with high control accuracy and integrated relief valve
- Designed for easy installation
- Tested for use with oxygen
- Suitable for inlet pressure values up to 300 bar
- Compact design especially for installation into safety cabinets for gas cylinders

Technical data

Type	single-stage
Inlet pressure P_1	max. 300 bar
Outlet pressure P_2	max. 12 bar
Materials	
Body regulator and valves:	chrome-plated brass
Valve seat regulator:	PA 11
Valve seat shut-off valve:	PVDF
Diaphragm regulator:	SS 301 (SS 1.4310)
Diaphragm valve:	Hastelloy C276
Soft goods:	Viton (FKM)
Filter:	Sintered SS 316L
Inlet connector	SS compression ring fitting 6x1 mm
Temperature range	-30°C to +60°C
Leak rate (to atmosphere)	$1x10^{-8}$mbar l/s He
(via seat)	$1x10^{-6}$mbar l/s He
Pressure gauges	Safety pressure gauges ISO5171/cl 1.6/NG50
Weight	8 kg

Flow curves BM65

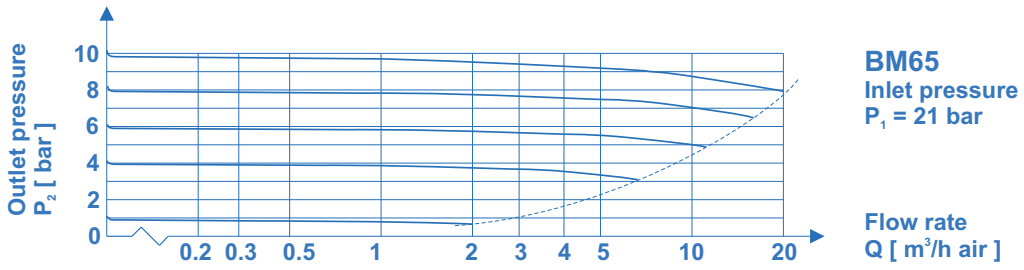

GASSENTRAL

BM65-2U

Pressure control panel BM65-2U

spectro lab

Dimensions pressure control panel BM65-2U

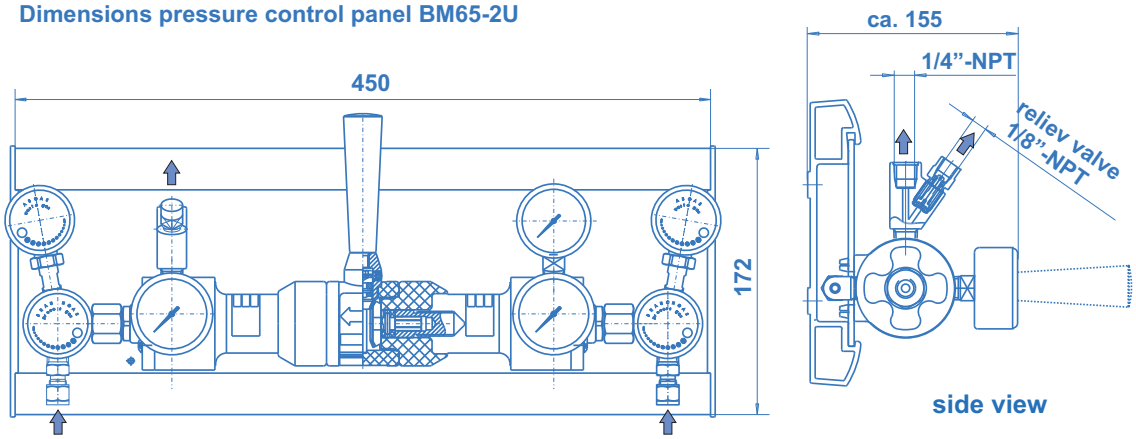

Additional configurations upon request!

Ordering information:
Pressure control panels BM 65-2U

BM65 - 2U - 300 - 10 - M - M - N_2

Type

65 - single-stage control panel

Inlet pressure P_1

50 - max. 50 bar
100 - max. 100 bar
300 - max. 300 bar

Outlet pressure P_2

10 - $P_{2,max}$: up to 10 bar ($P_{2,min} = P_{2,max}$ - 2.5 ... 3 bar)

Gas type

Please specify gas type with your order (selection of valve seat material)

Outlet press. indication

M - pressure gauge
K - contact pressure gauge

Inlet press. indication

M - pressure gauge
K - contact pressure gauge

Specifications

- SPECTROLAB - components guarantee maximum quality by using high grade materials and a quality assurance program acc. to ISO 9001.
- All components which come into contact with the medium are cleaned in an ultrasonic cleaning system (CFC-free) with the special cleaning process SPECTRO-CLEAN® and are then baked out.
- SPECTROLAB - components undergo a 100% function- and Helium-leak-test.

Pressure indication

- All pressure reguators can be equipped with pressure gauges or contact gauges for in- and outlet pressure indication.

Important note regarding component selection

- In order to assure safe operation it is essential to take the configuration of the whole system into account when selecting a control panel.
- The function of the components, the compatibility of the materials, correlating temperature ranges, correct installation, operation and maintenance in accordance with the relevant regulations are the responsibility of the system designer and the user.

ÆRLIG INTERESSERT PRESIS

GASSENTRAL

BM65-2L

Pressure control panel BM65-2L

Pressure control panel BM65-2L
with outlet connection

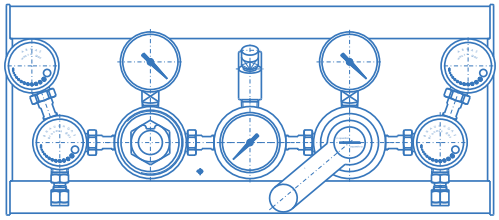

Product features

- Wall- and cabinet-mounting pressure control panels with automatic switch-over function
- For non-corrosive gases up to quality 6.0
- Laboratory-style design
- Ergonomically designed
- Modular design (to be extended to 2x2, 2x3 etc. cylinders)
- Filter at the process gas inlet valve
- Diaphragm-type shut-off valves optimised for low internal volume with On/Off position indicator
- Suitable for ECD-applications
- Regulator with high control accuracy
- Relief valve (adjustable version for P_2 = 100 bar)
- Designed for easy installation
- Tested for use with oxygen
- Suitable for inlet pressure values up to 300 bar
- Compact design especially for installation into safety cabinets for gas cylinders
- Models for outlet pressure values of up to 50 and 100 bar available (piston type regulators)
- Dual-stage models available upon request

Technical data

Type	single-stage
Inlet pressure P_1	max. 300 bar
Outlet pressure P_2:	20/50/100 bar
Materials	
Body regulator and valves:	chrome-plated brass
Valve seat regulator:	PA 11
Valve seat shut-off valve:	PVDF
Diaphragm regulator:	SS 301 (SS 1.4310)
Diaphragm valve:	Hastelloy C276
Piston (P_2=50/100bar):	brass
Soft goods:	Viton (FKM)
Filter:	Sintered SS 316L
Inlet connector	SS compression ring fitting 6x1 mm
Temperature range	-30°C to +60°C
Leak rate (to atmosphere)	$1x10^{-8}$mbar l/s He
(via seat)	$1x10^{-6}$mbar l/s He
Pressure gauges	Safety pressure gauges ISO5171/cl 1.6/NG50
Weight	8 kg

Flow curves BM65

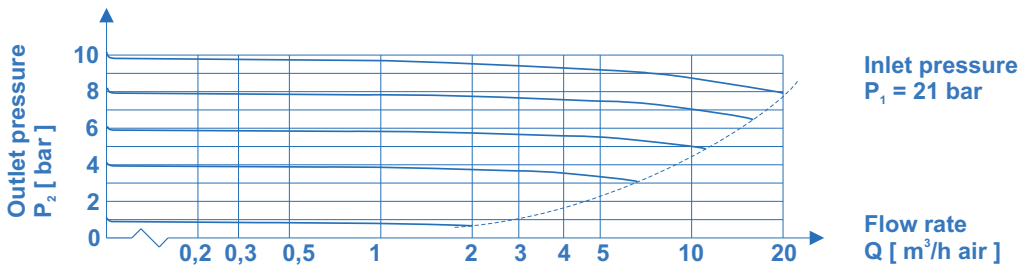

Pressure control panel BM65-2L

spectrolab

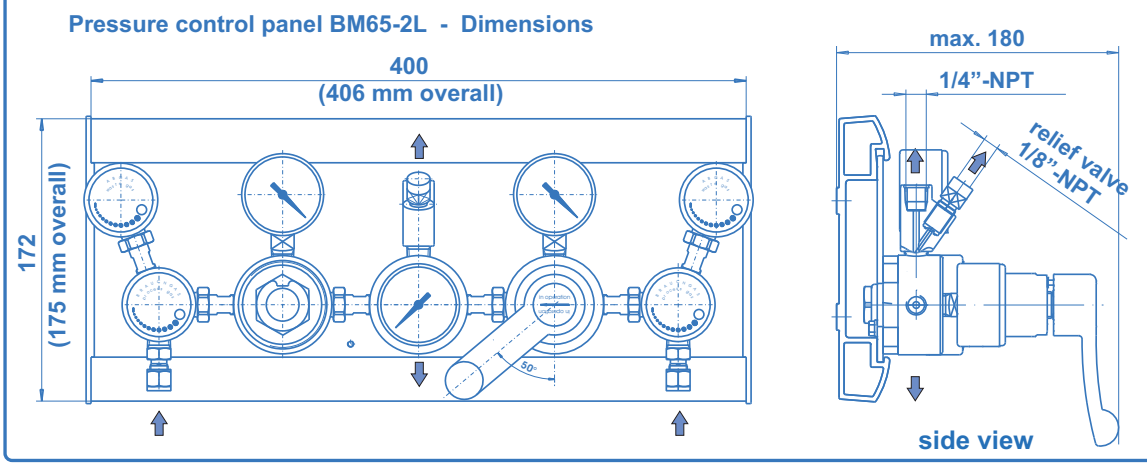

Additional configurations upon request!

Ordering information:
Pressure control panels BM65-2L

BM - 65 - 2L - 300 - 20 - M - M - N_2

Please specify gas type with your order

Type

65 - single-stage control panel
66 - dual-stage control panel (upon request)

Inlet pressure P_1

300 - max. 300 bar

Outlet pressure P_2

20 - up to 20 bar
50 - up to 50 bar (piston type regulator)
100 - up to 100 bar (piston type regulator)

Gas type

Please specify gas type with your order (selection of valve seat material)

Outlet press.

M - pressure gauge
K - Contact gauge

Inlet press. indication

M - pressure gauge
K - Contact gauge

Specifications

- SPECTROLAB - components guarantee maximum quality by using high grade materials and a quality assurance program acc. to ISO 9001.
- All components which come into contact with the medium are cleaned in an ultrasonic cleaning system (CFC-free) with the special cleaning process SPECTRO-CLEAN® and are then baked out.
- SPECTROLAB - components undergo a 100% function- and Helium-leak-test.

Pressure indication

- All pressure reguators can be equipped with pressure gauges or contact gauges for in- and outlet pressure indication.

Important note regarding component selection

- In order to assure safe operation it is essential to take the configuration of the whole system into account when selecting a control panel.
- The function of the components, the compatibility of the materials, correlating temperature ranges, correct installation, operation and maintenance in accordance with the relevant regulations are the responsibility of the system designer and the user.

ÆRLIG INTERESSERT PRESIS

Extensions BM 65-E

Extensions BM 65-E

Front view BM 65-E

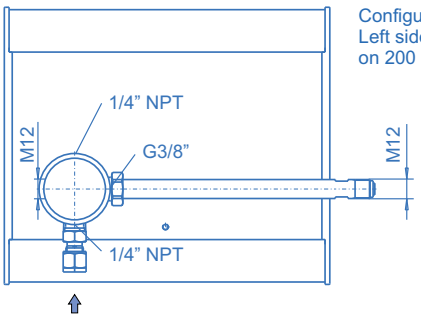

Configuration:
Left side extensions
on 200 mm profile

Product features

- Extension modules for all Spectrolab BM 65 and 66 series pressure control panels
- For non-corrosive gases up to quality 6.0
- Laboratory-style design
- Designed for easy installation
- With filter at the inlet of the individual extension modules

Technical data

Inlet pressure P_1	max. 300 bar
Materials	
Manifold body:	chrome-plated brass
Filter:	Sintered SS 316L
O-ring (for M12 connection):	FKM
Inlet connection	SS compression ring fitting 6x1 mm
Temperature range	-30°C to +60°C
Weight	approx. 1 kg per side

Right:
Standard extension module (left/right) for all BM 65 series pressure control panels

Sectional view of connector glands!

Bottom: Extension modules left and right in separate units

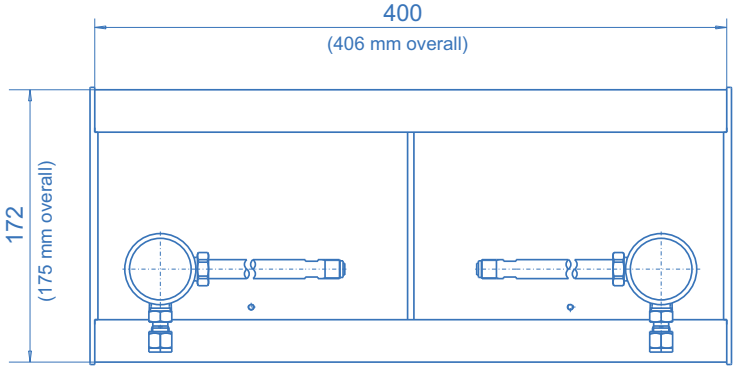

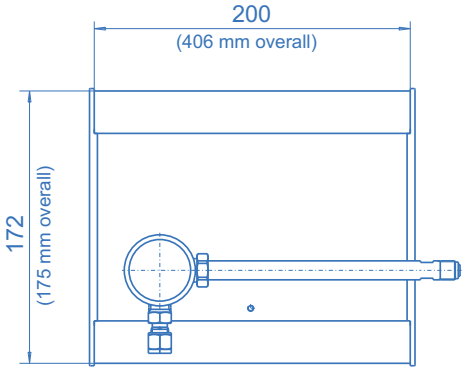

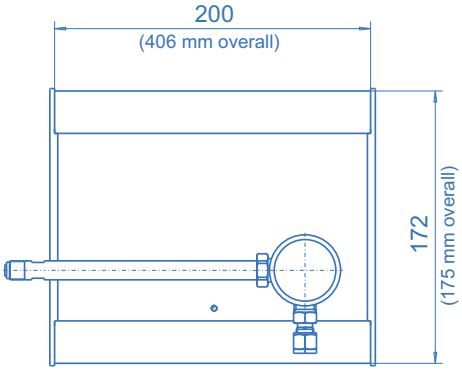

Extensions BM 65-E

Extension modules completely assembled
(example: pressure control panel BM 65-2)

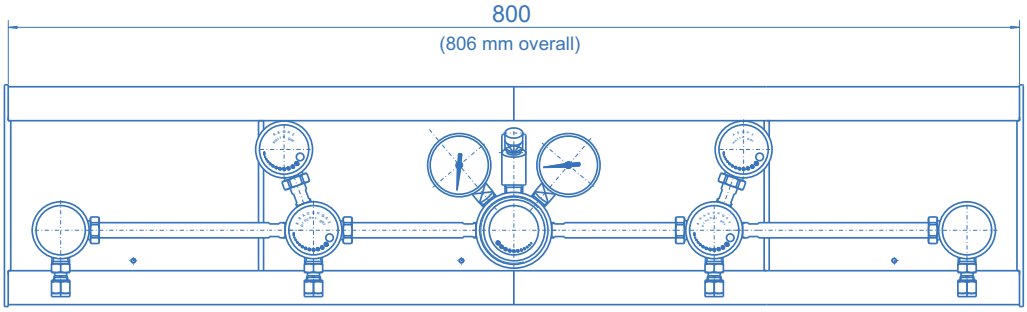

Additional configurations upon request!

Ordering information:
Extensions BM 65-E

BM 65 - E - 2 x 2

Type

1 x 2	- Extensions for panels BM 65/66-1 to 2 cylinders
1 x 3	- Extensions for panels BM 65/66-1 from 1 x 2 to 1 x 3 cylinders
1 x 4	- Extensions for panels BM 65/66-1 from 1 x 2 to 1 x 4 cylinders
2 x 2	- Extensions for panels BM 65/66-2 ... to 2 x 2 cylinders
2 x 3	- Extensions for panels BM 65/66-2 ... from 2 x 2 to 2 x 3 cylinders
2 x 4	- Extensions for panels BM 65/66-2 ... from 2 x 2 to 2 x 4 cylinders

Specifications

- SPECTROLAB - components guarantee maximum quality by using high grade materials and a quality assurance program acc. to ISO 9001.
- All components which come into contact with the medium are cleaned in an ultrasonic cleaning system (CFC-free) with the special cleaning process SPECTRO-CLEAN® and are then baked out.
- SPECTROLAB - components undergo a 100% Helium-leak-test.

Important note regarding component selection

- In order to assure safe operation it is essential to take the configuration of the whole system into account when selecting system components.
- The function of the components, the compatibility of the materials, correlating temperature ranges, correct installation, operation and maintenance in accordance with the relevant regulations are the responsibility of the system designer and the user.

ÆRLIG
INTERESSERT
PRESIS

Pressure control panels BM65-AC

Pressure control panel BM65-1-M-KH-C2H2

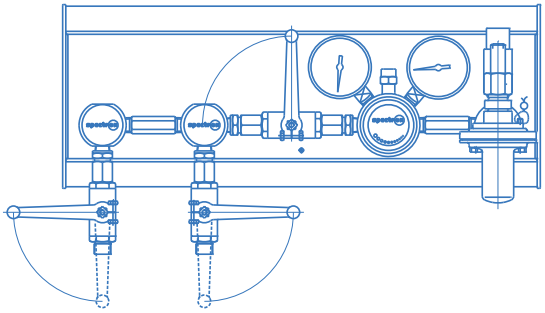

Pressure control panel BM65-2-M-KH-C2H2

Product features

- Wall-mounting pressure control panels for acetylene
- Single-stage systems for 1 or 2 cylinders
- Laboratory-style design
- Ergonomically designed
- Pressure regulator with high control accuracy and integrated relief valve for protection of the device
- Quick-acting shut-off valve (manual)
- optionally: automatic quick-acting shut-off device
- optionally: Acetylene Safety Guard (ASG)
  For further information please see data sheet ASG
- Flashback arrestor
- Over-pressure valve *
- Designed for easy installation
- Suitable for inlet pressure values up to 25 bar
- Compact design especially for installation into safety cabinets for gas cylinders
- Pressure control panels comply with DIN-EN-ISO 14114 and DIN-EN-ISO 15615

Technical data

Type		single-stage
Inlet pressure P_1		max. 25 bar
Outlet pressure P_2		1,5 bar
Materials		
Body regulator and connection blocks:		brass
Valve cone regulator:		PA
Diaphragm regulator:		EPDM
Ball valve:		steel, zinc-plated
Connectors		
Inlet		M 16 x 1,5 male
Outlet flashback arrestor		1/4”-NPT female
Outlet relief valve		1/8”-NPT female
Outlet over-pressure valve		welding stub 14 x 2
Temperature range		-30°C to +60°C
Leak rate		$1x10^{-4}$ mbar l/s He
Pressure gauges		Safety pressure gauges ISO5171/Kl2.5/NG63
Weight	BM65-1-AC:	ca. 6 kg
	BM65-2-AC:	ca. 7 kg

* An over-pressure valve cannot be used as an safety accessory according to the Pressure Equipment Directive (PED).

Flow rates BM65-AC:

The maximum flow rate is approx. 8 sm³/h acetylene.
At an inlet pressure of approx. 4 bar (resembling an acetylene cylinder almost empty) the pressure regulator still yields approx. 5 sm³/h acetylene.

Inlet press. P_1	Outlet press. P_2 [bar]		
[bar]	0,5	1	1,2
18	5,0 m^3/h	6,0 m^3/h	8,0 m^3/h
10	4,5 m^3/h	5,5 m^3/h	6,5 m^3/h
4	3,0 m^3/h	4,0 m^3/h	5,0 m^3/h
2	1,5 m^3/h	2,0 m^3/h	3,0 m^3/h

The withdrawal rate should not exceed approx. 0,5 sm³/h per cylinder in permanent operation, so no solvent from the cylinder will enter the withdawal system. However, the flow rate may be increased to approx. 1 sm³/h for brief peak loads.

Pressure control panels BM65-AC

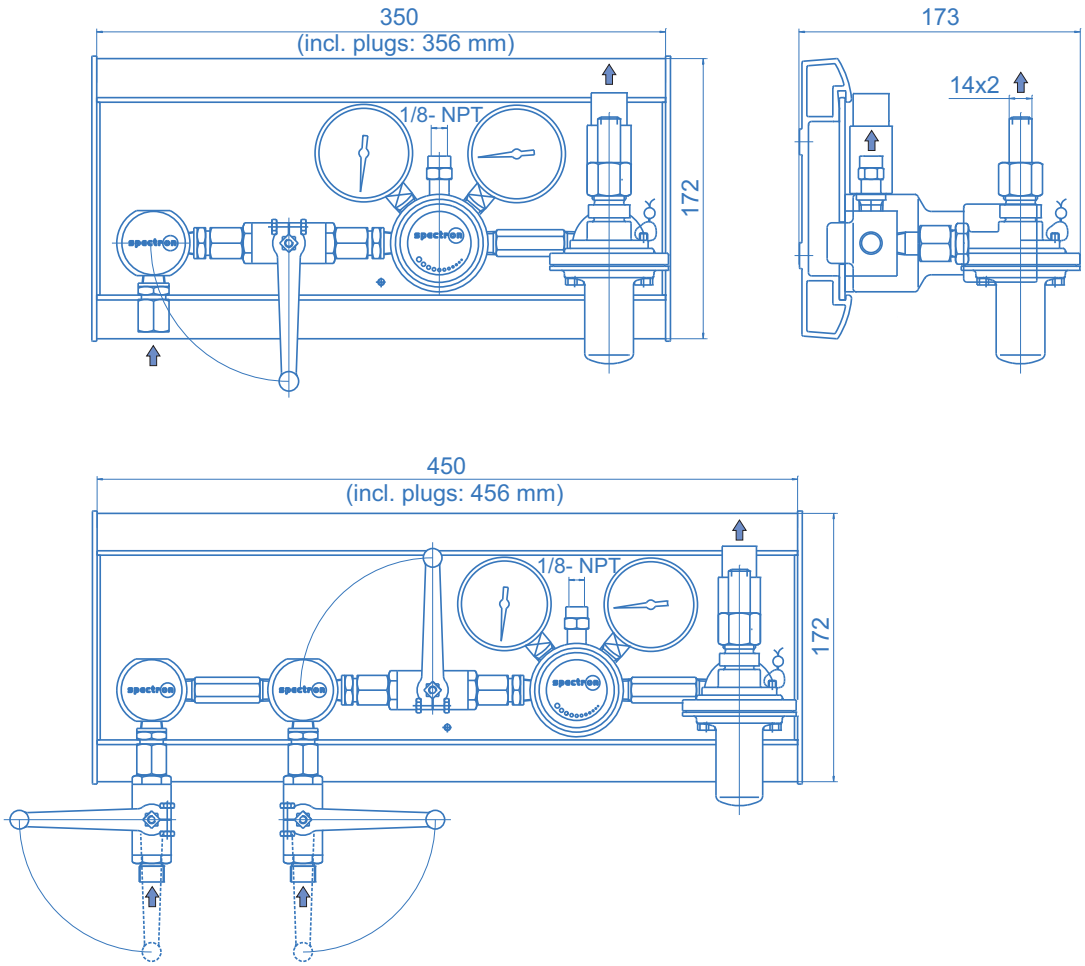

Ordering information:
Pressure control panels BM65-AC

BM65 - 1 - M - KH - C_2H_2

Type

1 - panel for 1 cylinder
2 - panel for 2 cylinders

Outlet press. indication

M - Pressure gauge
K - Contact pressure gauge

Quick-acting shut-off

KH - manual quick-acting shut-off device (ball valve)
SSE - automatic quick-acting shut-off device SSE
ASG - Acetylene Safety Guard

ÆRLIG INTERESSERT PRESIS

GASSENTRAL

BM65-2A-AC

Pressure control panel BM65-2A-AC

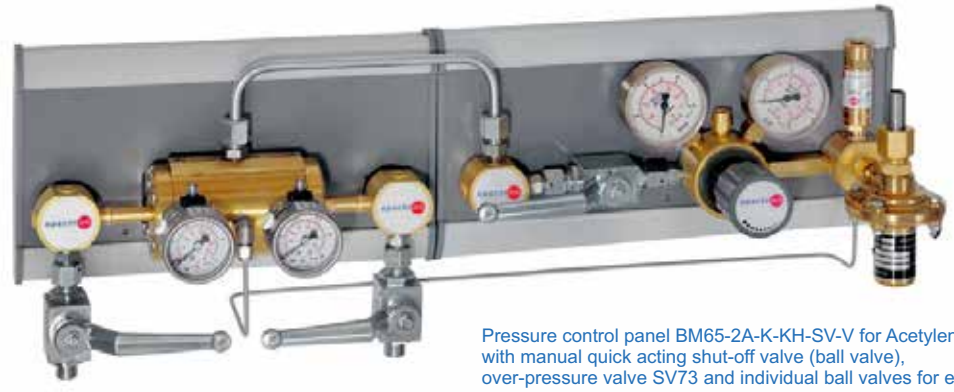

Pressure control panel BM65-2A-K-KH-SV-V for Acetylene
with manual quick acting shut-off valve (ball valve),
over-pressure valve SV73 and individual ball valves for each cylinder

Product features

- Wall mounting pressure control panel for acetylene with fully automatic change-over function
- Minimised pressure difference between left and right hand side outlet pressure due to Ambimat
- Maximum emptying of gas cylinders
- Designed for easy installation
- Pressure regulator with high control accuracy and integrated relief valve for protection of the device
- Pressure control panels comply with DIN-EN-ISO 14114 and DIN-EN-ISO 15615
- With all BAM-tested safety devices, e.g.:
  - Quick-acting shut-off valve
  - Flashback arrestor
  - optionally: over-pressure valve *
  - optionally: automatic quick-acting shut-off device

Attention:
Acetylene withdrawal systems may need to be certified before commisioning. Always refer to the local rules and regulations regarding such certifications.

Technical data

Type	single-stage
Inlet pressure P_1	max. 25 bar
Outlet pressure P_2	max. 1,5 bar
Change-over pressure P_U	ca. 3 bar
Materials	
Body regulator:	brass
Diaphragm regulator:	EPDM
Valve cone regulator:	PA
Mounting plate:	stainless steel
Ball valve:	steel, zinc-plated
Connection tube:	steel, zinc-plated
Connectors	
Inlets:	M16 x 1,5 male
Outlet flashback arrestor:	1/4”-NPT female
Outlet relief valve:	1/8”-NPT female
Outlet over-pressure valve:	welding stub 14 x 2
Temperature range	+15°C to +60°C
Leak rate	$<10^{-4}$ mbar l/s He
Weight	15 kg

* An over-pressure valve cannot be used as an safety accessory according to the Pressure Equipment Directive (PED).

Flow rates for BM65-2A-AC:

The maximum flow rate is approx. 8 sm³/h acetylene.
At an inlet pressure of approx. 4 bar (resembling an acetylene cylinder almost empty) the pressure regulator still yields approx. 5 sm³/h acetylene.

Inlet press. P_1	Outlet press. P_2 [bar]		
[bar]	0,5	1	1,2
18	5,0 m³/h	6,0 m³/h	8,0 m³/h
10	4,5 m³/h	5,5 m³/h	6,5 m³/h
4	3,0 m³/h	4,0 m³/h	5,0 m³/h
2	1,5 m³/h	2,0 m³/h	3,0 m³/h

The withdrawal rate should not exceed approx. 0,5 sm³/h per cylinder in permanent operation, so no solvent from the cylinder will enter the withdawal system. However, the flow rate may be increased to approx. 1 sm³/h for brief peak loads.

Pressure control panel BM65-2A-AC

spectrolab

Dimensions - pressure control panel BM65-2A-K-KH-SV-V-C2H2

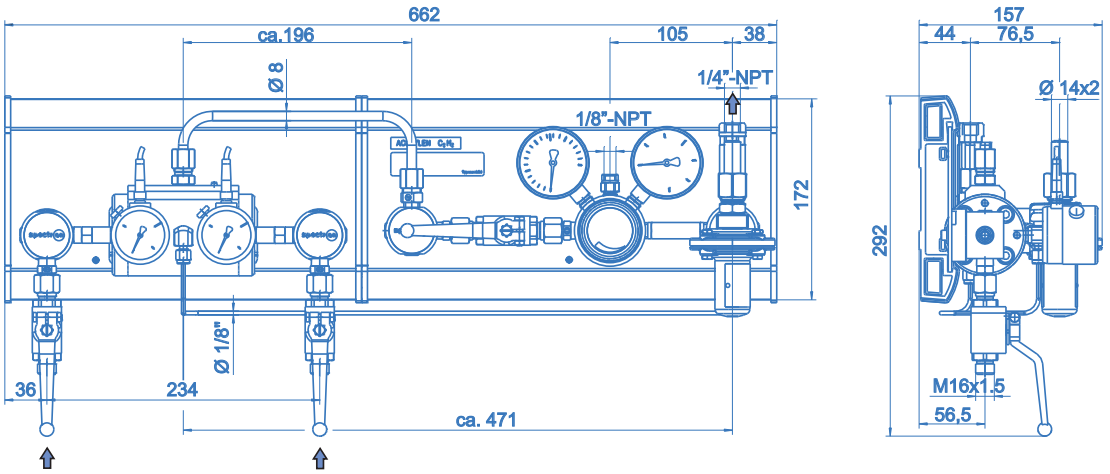

Ordering information:
Pressure control panels BM65-2A-AC

BM65-2A - M - KH - SV - 0 - C2H2

Inlet press. indication
- M - Pressure gauge
- K - Contact pressure gauge

Quick-acting shut-off
- KH - manual quick-acting shut-off device (ball valve)
- SSE - automatic quick-acting shut-off device SSE

Individual shut-off
- 0 - without individual valves
- V - with additional ball valves for each individual cylinder

Over-pressure valve
- 0 - without over-pressure valve
- SV - with over-pressure valve

Specifications

- SPECTROLAB - components guarantee maximum quality by using high grade materials and a quality assurance program acc. to DIN ISO 9001.
- All components which come into contact with the medium are cleaned free of oil and grease before the assembly.
- SPECTROLAB - components undergo a 100% leak- and function test.

Important note regarding component selection

- In order to assure safe operation it is essential to take the configuration of the whole system into account when selecting a control panel.
- The function of the components, the compatibility of the materials, correlating temperature ranges, correct installation, operation and maintenance in accordance with the relevant regulations are the responsibility of the system designer and the user.

ÆRLIG INTERESSERT PRESIS

Control Panels BM55/BE55

Shut-off valves MV3-M

MV3-DV-H-M-NPTF1/4

MV3-DV-PN25/100/300-M-NPTF1/4

Product features

- Brass valves for manual or automatic (pneumatic) shut-off
- For non corrosive gases and gas mixtures up to qualität 6.0
- Diaphragm metal-to-metal sealed to atmosphere
- In- and outlet filter
- Suitable for pressures up to 300 bar
- Fully functional under vacuum
- Ergonomically designed
- New laboratory-style design
- Compact design
- Manual valve with position indicator

- Pneumatic actuator optional for line pressure 25, 100, 200 and 300 bar
- Optional with inductive proximity switch
- Variable installation position

Technical data

Operating pressure	max. 300 bar
Nominal diameter	4 mm
Materials	
Body:	chrome-plated brass
Diaphragm:	Hastelloy C276
Valve seat:	PVDF
Filter:	sintered bronze
Inlet	1/4”-NPT female
Outlet	1/4”-NPT female
Temperature range	-30°C to +60°C
Leak rate	$<10^{-8}$ mbar l/s He
Weight	0,5 kg
c_v-value	c_v = 0,33 / 0,09*

* with filter (must be installed for the use of oxygen)

Technical data pneumatic actuators

Actuator pressure:	6 to 8 bar
Actuator connector:	for hose Ø 4mm
Pneumatic function:	- normally closed (NC) - normally open (NO)
Option:	- inductive proximity switch

ÆRLIG
INTERESSERT
PRESIS

Shut-off valves MV3-M

Dimensions shut-off valve MV3

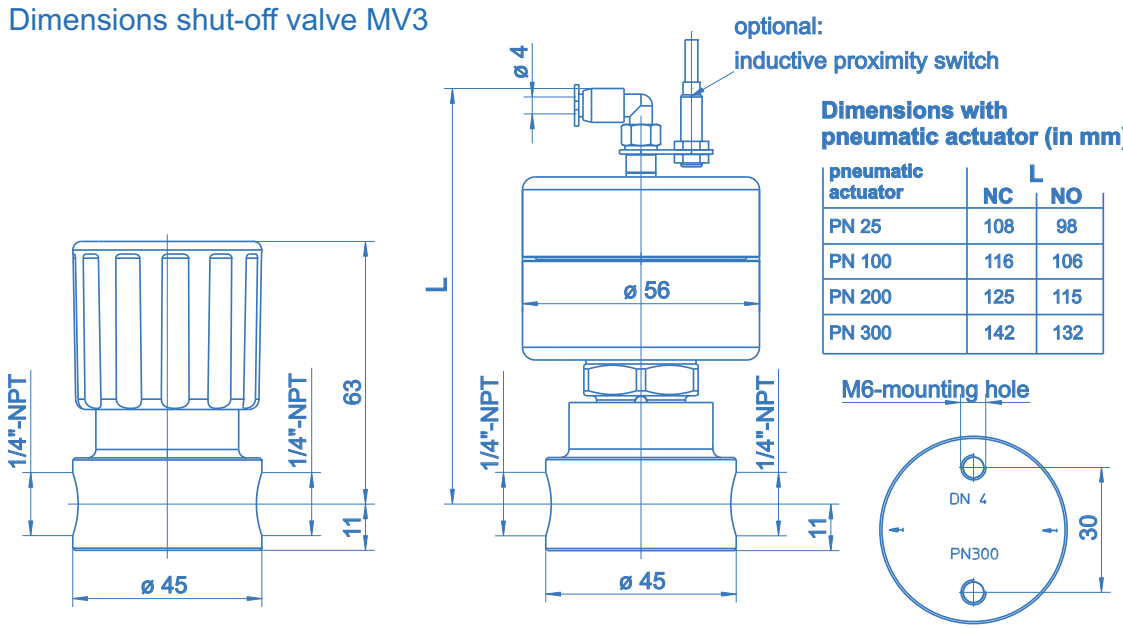

Dimensions with pneumatic actuator (in mm):

pneumatic actuator	L NC	L NO
PN 25	108	98
PN 100	116	106
PN 200	125	115
PN 300	142	132

Ordering information:
MV3-M series valves

MV3 - DV - H - M - NPTF1/4

Type

DV - globe valve (2 ports)

Other types upon request

Valve

H - manual valve

PN... - pneumatic actuator PN **25/100/200/300**
PNI... - pneumatic actuator PN **25/100/200/300** with inductive proximity switch
N... - pneumatic actuator **NO / NC**

Specifications

- SPECTROLAB - components guarantee maximum quality by using high grade materials and a quality assurance program acc. to ISO 9001.
- All components which come into contact with the medium are cleaned in an ultrasonic cleaning system (CFC-free) with the special cleaning process SPECTRO-CLEAN® and are then baked out.
- SPECTROLAB - components undergo a 100% Helium-leak-test.

Important note regarding component selection

- In order to assure safe operation it is essential to take the configuration of the whole system into account when selecting a component.
- The function of the component, the compatibility of the materials, correlating temperature ranges, correct installation, operation and maintenance in accordance with the relevant regulations are the responsibility of the system designer and the user.

Diaphragm valves DVM

DVM-8-NPT-F-1/4 SA

DVM-8-OD-6

DVM-8-OD-1/4

Product features

- Brass diaphragm valve
- For non-corrosive gases and gas mixtures up to quality 6.0
- Suitable for pressures up to 40 bar
- Fully functional under vacuum
- Wide range of in-/ outlets
- Metal-to metal sealing to atmosphere
- Suitable to use with oxygen
- Ergonomically designed

Technical data

Type		Diaphragm valve	
Working pressure		DN8, DN13: max. 40 bar DN19: max. 25 bar	
Materials			
Body:		chrome plated brass	
Diaphragm:	DN8	stainless steel 1.4571	
	DN13/19	stainless steel 1.4310	
In- and outlets		Female thread or stainless steel welding stub	
Temperature range		-30°C to +60°C	
Leak rate		$<10^{-8}$ mbar l/s He	
Seat diameter		8, 13 or 19 mm	
Flow capacity (c_v)	DN8:	1/4”-NPT	1,47
		3/8”-NPT	1,47
		tube 6x1 mm	0,47
		tube 8x1 mm	1,09
		tube 10x1 mm	1,47
		tube 1/4” male	0,64
		tube 3/8” male	1,58
	DN13:		2,1
	DN19:		3,1

DVM-13-NPT-F-1/2

DVM-19-NPT-F-3/4

ÆRLIG
INTERESSERT
PRESIS

Diaphragm valves DVM

spectrolab

Ordering information:
Diaphragm valves DVM

DVM - 13 - NPT F - 1/2

8		13		19	
NPT F 1/4*	- 1/4”-NPT female	NPT F 1/2	- 1/2”-NPT female	NPT F 3/4	- 3/4”-NPT female
NPT F 3/8*	- 3/8”-NPT female	OD 12	- SS-tube 12x1 mm	OD ...	- SS-tube upon request
OD 6*	- SS-tube 6x1 mm	OD 15	- SS-tube 15x1 mm		
OD 8*	- SS-tube 8x1 mm	OD 1/2	- SS-tube 1/2” male		
OD 10*	- SS-tube 10x1 mm				
OD 1/4*	- SS-tube 1/4” male				
OD 3/8*	- SS-tube 3/8” male				

*option:
... SA - with position indicator

Dimensions

DVM-8-NPT-F-1/4

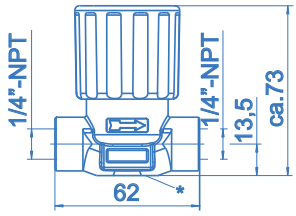

DVM-8-NPT-F-3/8

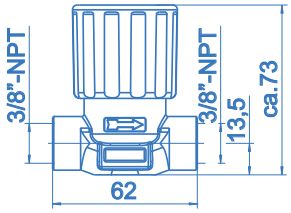

DVM-8-OD...

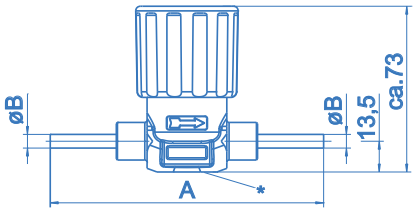

* M6 mounting hole

DVM-13-NPT-F-1/2

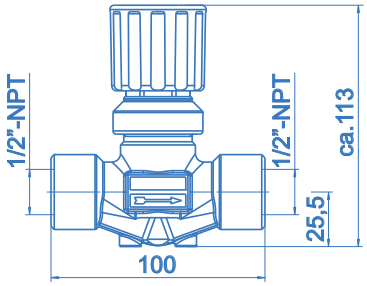

DVM-13-OD...

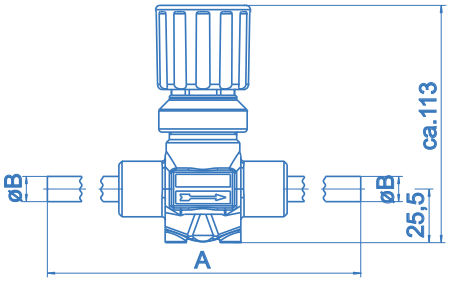

DVM-19-NPT-F-3/4

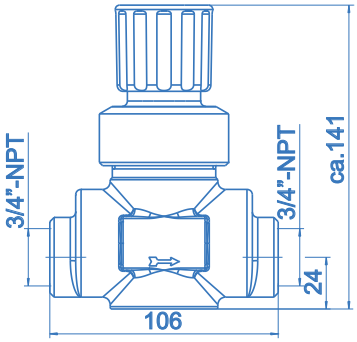

DVM-19-OD...

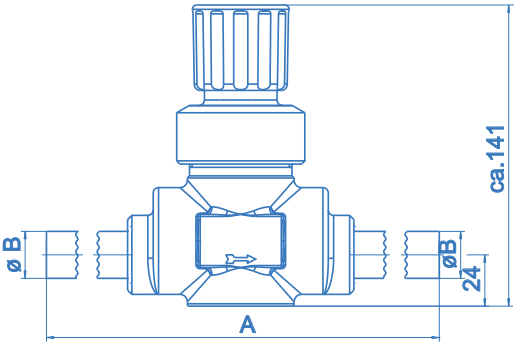

Control- and shut-off valves V6M-3

spectrolab

Control valve EV-V6M-3

Dimensions: valves V6M-3

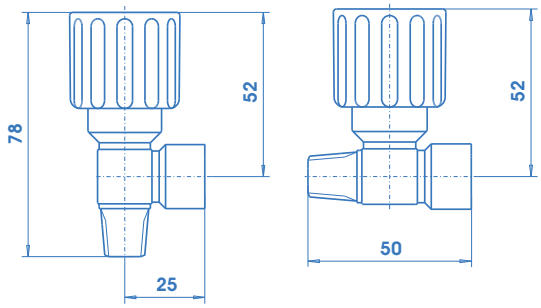

Product features

- Available as control valve (e. g. for the pressure regulator outlet)
- High control accuracy
- Shut-off valves (e.g. for in- and outlets of pressure regulators with inert gas purge arrangements)
- Diaphragm metal-to-metal sealed to atmosphere
- Ergonomically designed
- New laboratory-style design
- Compact design

Technical data

Operating pressure	
Control valve:	max. 50 bar
Shut-off valve:	max. 200 bar
Nominal diameter	3 mm
Materials	
Body:	chrome-plated brass
Diaphragm:	Duratherm 600
Control spindle:	SS 1.4404 (SS 316 L)
Inlet connection	1/4”-18 NPT-M
Outlet connection	1/4”-18 NPT-F
Leak rate	$<10^{-8}$ mbar l/s He
Weight	0,5 kg
Flow rate	see flow curves
c_v-value shut-off valve	$c_v = 0{,}08$

Flow curves control valve V6M-3

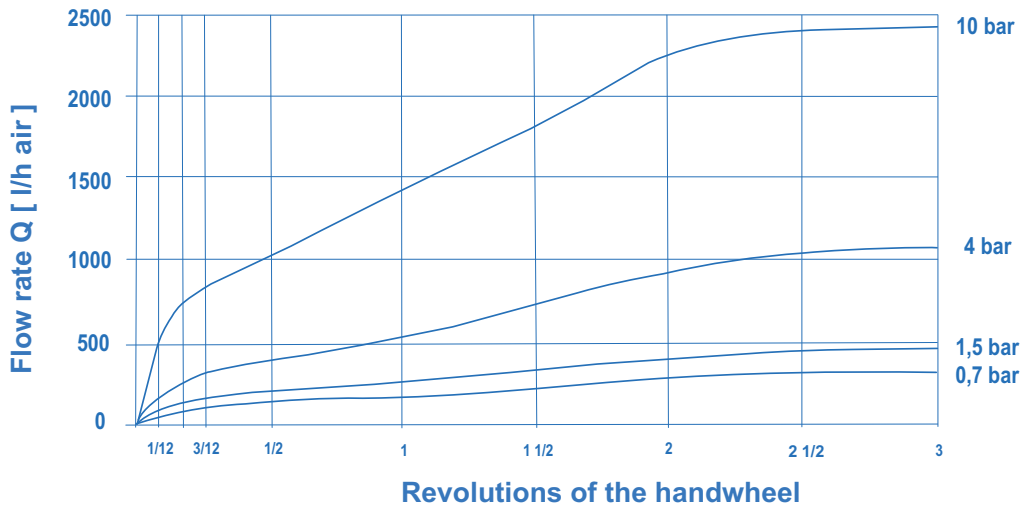

ÆRLIG INTERESSERT PRESIS

Control- and shut-off valves V6M-3

spectrolab

Dimensions valves V6M-3

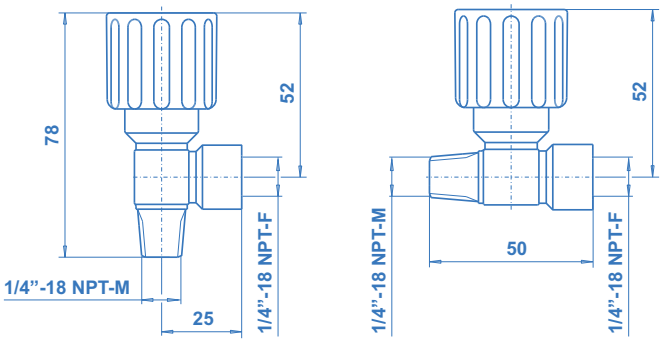

Detail:
Control valve seat

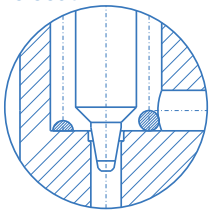

Detail:
Shut-off valve seat

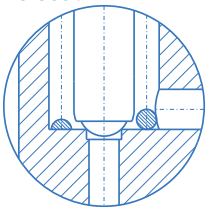

Ordering information:
V6M-3 series valves

DV - V6M-3 - CV

Type

DV - globe valve
EV - angle valve

Function

AV - shut-off valve
CV - control valve

Article numbers control valves

globe valve	DV-V6M-3-CV:	**71801038**
angle valve	EV-V6M-3-CV:	**71801036**

Article numbers shut-off valves

globe valve	DV-V6M-3-AV:	**71804363**
angle valve	EV-V6M-3-AV:	**71804364**

Specifications

- SPECTROLAB - components guarantee maximum quality by using high grade materials and a quality assurance program acc. to ISO 9001.
- All components which come into contact with the medium are cleaned in an ultrasonic cleaning system (CFC-free) with the special cleaning process SPECTRO-CLEAN® and are then baked out.
- SPECTROLAB - components undergo a 100% Helium-leak-test.

Important note regarding component selection

- In order to assure safe operation it is essential to take the configuration of the whole system into account when selecting a component.
- The function of the component, the compatibility of the materials, correlating temperature ranges, correct installation, operation and maintenance in accordance with the relevant regulations are the responsibility of the system designer and the user.

UTTAKSPOST
EM55

Tapping points EM55

Tapping point EM55-4

Dimensions EM55-1

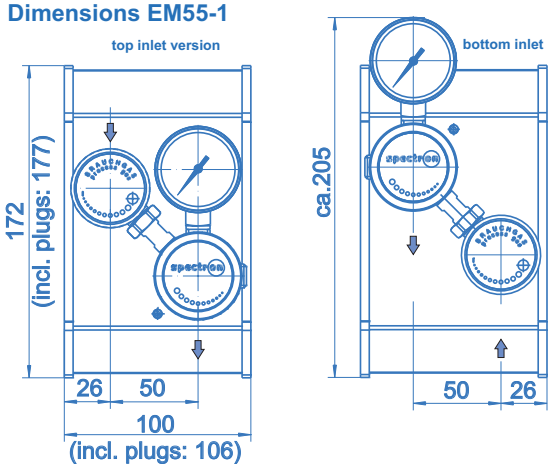

Product features

- Wall-mounting tapping points
- For non-corrosive gases up to quality 6.0
- Laboratory-style design
- Ergonomically designed
- Filter at the process gas inlet valve
- Diaphragm-type shut-off valves optimised for low internal volume with On/Off position indicator
- Suitable for ECD-applications
- Pressure regulator with high control accuracy
- Designed for easy installation
- Approved for use with oxygen
- Tapping point can be extended into multiple tapping points
- Top-inlet or bottom-inlet configurations available

Technical data

Inlet pressure P_1	max. 200 bar
Outlet pressure P_2	1,5 / 4 / 10 / 20 / 50 bar
Materials	
Body regulator and valves:	chrome-plated brass
Valve seat regulator:	PA
Valve seat valves:	PVDF
Diaphragm regulator:	Hastelloy C276
Diaphragm valve:	Hastelloy C276
Soft goods:	FKM
Filter:	Sintered SS 316L
Connectors	1/4"-NPT female
Temperature range	-30°C to +60°C
Leak rate (to atmosphere)	$1x10^{-8}$mbar l/s He
(via valve seat)	$1x10^{-6}$mbar l/s He
Pressure gauges	Safety pressure gauges ISO5171/Kl1.6/NG50
Weight	2,5 kg

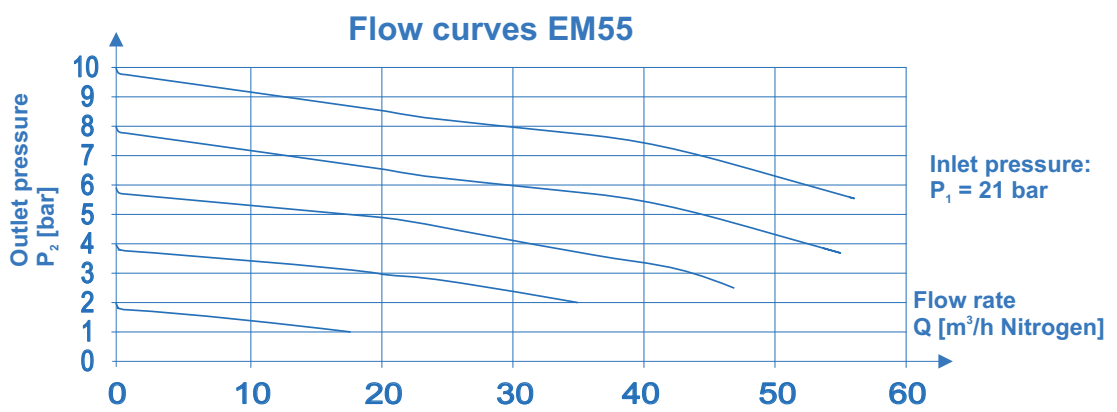

ÆRLIG INTERESSERT PRESIS

Tapping points EM55

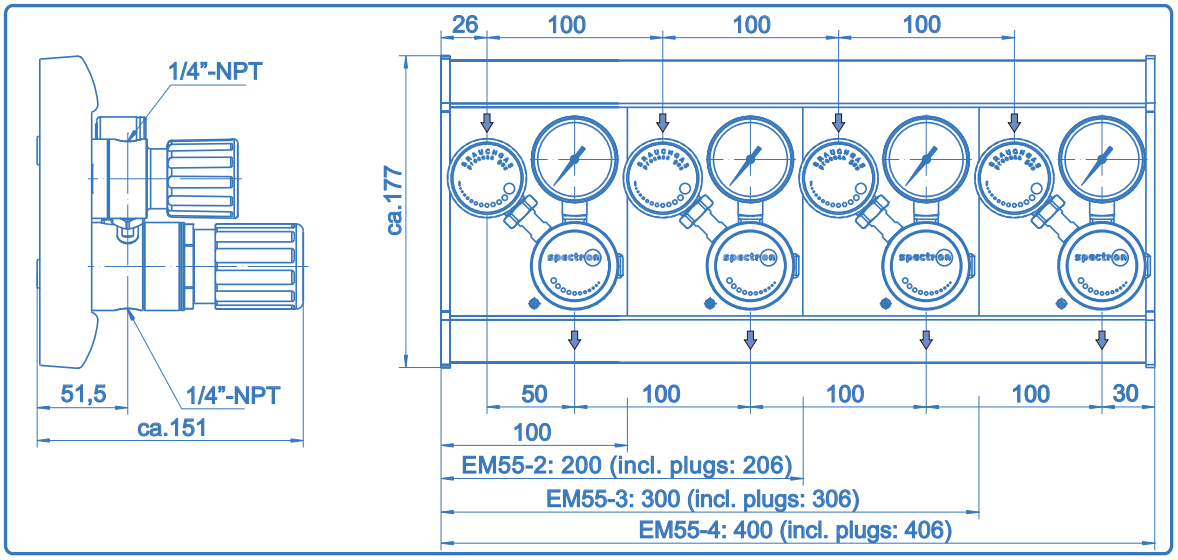

Ordering information:
Tapping points EM55

EM55 - 1 - 40 - 10 - O

Please specify gas type with order

Type

1 - single tapping point
2 - double tapping point
3 - triple tapping point
4 - 4 tapping points

Inlet pressure P_1

40 - 40 bar
100 - 100 bar
200 - 200 bar

Inlet

O - top inlet
U - bottom inlet

Outlet pressure P_2

1,5 - 1,5 bar
4 - 4 bar
10 - 10 bar
20 - 20 bar
50 - 50 bar
Higher outlet pressure upon request

Specifications

- SPECTROLAB - components guarantee maximum quality by using high grade materials and a quality assurance program acc. to ISO 9001.
- All components which come into contact with the medium are cleaned in an ultrasonic cleaning system (CFC-free) with the special cleaning process SPECTRO-CLEAN® and are then baked out.
- SPECTROLAB - components undergo a 100% function- and Helium-leak-test.

Pressure indication

- All pressure reguators are equipped with pressure gauges for outlet pressure indication for the relevant pressure range.

Important note regarding component selection

- In order to assure safe operation it is essential to take the configuration of the whole system into account when selecting a tapping point.
- The function of the components, the compatibility of the materials, correlating temperature ranges, correct installation, operation and maintenance in accordance with the relevant regulations are the responsibility of the system designer and the user.

Tapping points EM65

spectrolab

Tapping points EM65-4

Dimensions EM65-1

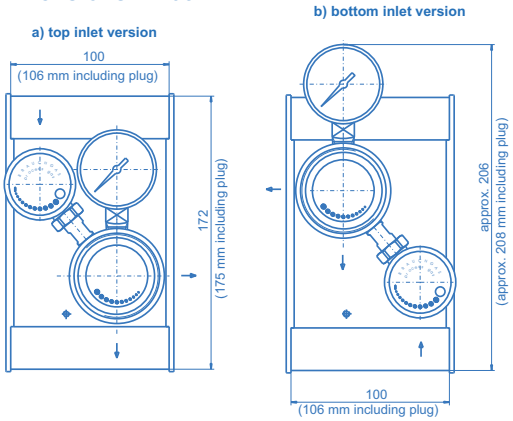

Product features

- Wall-mounting tapping points
- For non-corrosive gases up to quality 6.0
- Laboratory-style design
- Ergonomically designed
- Filter at the process gas inlet valve
- Diaphragm-type shut-off valves optimised for low internal volume with On/Off position indicator
- Suitable for ECD-applications
- Regulator with high control accuracy
- Designed for easy installation
- Tested for use with oxygen
- Tapping point can be extended into multiple tapping points
- Top-inlet or bottom-inlet configurations available

Technical data

Inlet pressure P_1	max. 40 bar
Outlet pressure P_2	1.5 / 4 / 10 / 20 bar
Materials	
Body regulator and valve:	chrome-plated brass
Valve seat regulator:	PA 11
Valve seat shut-off valve:	PVDF
Diaphragm regulator:	SS 301 (SS 1.4310)
Diaphragm valve:	Hastelloy C276
Soft goods:	Viton (FKM)
Filter:	Sintered SS 316L
Connectors	1/4”-18 NPT-F
Temperature range	-30°C to +60°C
Leak rate (to atmosphere)	$1x10^{-8}$ mbar l/s He
(via seat)	$1x10^{-6}$ mbar l/s He
Pressure gauges	Safety pressure gauge EN562 / cl. 1.6 / NG50
Weight	2.5 kg

Flow curves EM65

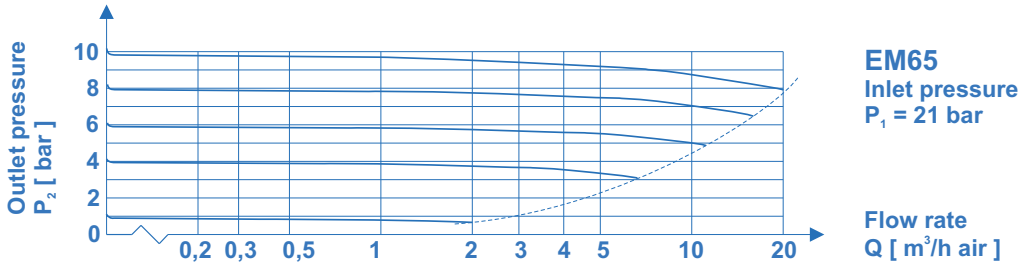

ÆRLIG INTERESSERT PRESIS

Tapping points EM65

Dimensions Tapping points EM65 in multiple installations

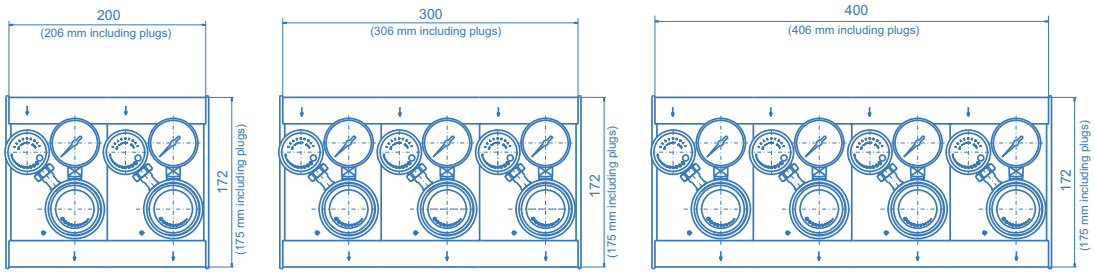

EM65-2 **EM65-3** **EM65-4**

Ordering information:
EM65 series tapping points

EM65 - 1 - 40 - 10 - O

Please specify gas type with your order (valve seat material)

Type

1 - Single tapping point
2 - double tapping point
3 - triple tapping point
4 - 4 tapping points

Inlet

O - Top-inlet
U - Bottom-inlet

Inlet pressure P_1

40 - 40 bar

Outlet pressure P_1

1.5 - 1.5 bar
4 - 4 bar
10 - 10 bar
20 - 20 bar
Higher outlet pressure values upon request

Specifications

- SPECTROLAB - components guarantee maximum quality by using high grade materials and a quality assurance program acc. to ISO 9001.
- All components which come into contact with the medium are cleaned in an ultrasonic cleaning system (CFC-free) with the special cleaning process SPECTRO-CLEAN® and are then baked out.
- SPECTROLAB - components undergo a 100% function- and Helium-leak-test.

Pressure indication

- All pressure reguators are equipped with pressure gauges for outlet pressure indication for the relevant pressure range.

Important note regarding component selection

- In order to assure safe operation it is essential to take the configuration of the whole system into account when selecting a tapping point.
- The function of the components, the compatibility of the materials, correlating temperature ranges, correct installation, operation and maintenance in accordance with the relevant regulations are the responsibility of the system designer and the user.

Compact laboratory tapping points
EM15: for non-corrosive gases
EE15: for corrosive gases

Surface-mounted
Laboratory equipment with rear wall inlet and front outlet

Type AW

Surface-mounted angle
Laboratory equipment with rear wall inlet and rear outlet

Type AE

Panel-mounted
Laboratory equipment with rear wall inlet and rear outlet

Type EP

Valves / wall outlets
Laboratory equipment with rear wall inlet and front outlet

Type AW / EP

Panel-mounted front
Laboratory equipment with rear wall inlet and front outlet

Type EF

Wall-mounted
Laboratory equipment for wall mounting (surface-mounted pipework)

Type ES

Column-mounted
Column-mounted laboratory equipment and front outlet

Type SC

Ceiling-mounted
Laboratory equipment with top inlet and front outlet

Type DC

spectron
Gas Control Systems

ÆRLIG
INTERESSERT
PRESIS

Compact laboratory tapping points EM15 / EE15

spectro lab

Specifications

- The special laboratory tapping points incorporate the functions shut-off, pressure regulation and pressure indication in one compact, ergonomic unit.
- EM15: for non-corrosive gases up to quality 6.0
- EE15: for corrosive gases and gas mixtures with corrosive components up to quality 6.0
- The pressure regulator is diaphragm sensed for outlet pressures up to 10 bar and piston sensed for higher outlet pressure values.
- The acetone resistant pressure gauge is safely integrated into the adjusting hand wheel to create an extremely compact device.
- Integrated shut-off valve in the rear-wall connector allows the preparation of the tapping point without pressure regulator.
- Quick and easy mounting or disassembly of the regulating unit with filled gas piping.
- Diaphragm shut-off valve with position indicator
- Optional flow control / shut-off valve in the outlet
- All gas-wetted components have undergone the special SPECTROCLEAN© cleaning process and have been thoroughly baked out.
- For ECD-applications the devices can be treated in an extended cleaning process.
- All equipment has been 100%-helium-leak-tested using a mass-spectrometer.
- All components are plastic-covered resistant to acid and alkaline solutions.
- Acetylene version optional with flashback arrester.

Technical data

Materials		
Body	M15:	brass
	E15:	SS 1.4404 (316L)
Diaphragms:		Hastelloy C276
other gas wetted surfaces:		brass or SS 1.4404 (316L)
Valve cone:		SS 1.4404 (316L)
Valve seat:		PTFE
Cover:		Polypropylene GB30
Leak rate (to atmosphere):		10^{-8} mbar l/s He
Filter		150 µm
Pressure ranges		
Inlet P_1 (P_2 up to 10 bar):		max. 40 bar
(P_2 > 10 bar):		max. 100 bar
max. outlet pressure P_2:		1,0 / 1,5 / 2,5 / 5 / 10 / 16 / 25 / 65 bar

P_2 up to 10 bar: The pressure setting will be done at 10 bar inlet pressure. The limitation of the outlet pressure setting is approx. P_2 + 5%.
P_2 > 10 bar: The inlet pressure for the pressure setting will be done according to the customer´s / user´s specification.

Flow rates with valve in the outlet	see flow curves
Connection to rear-wall connector	G 3/8“ RH

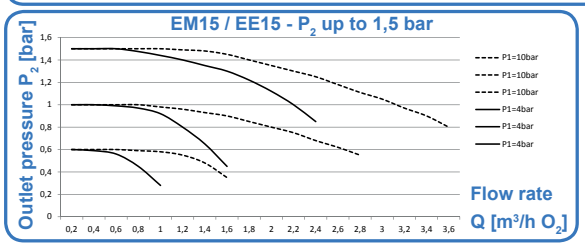

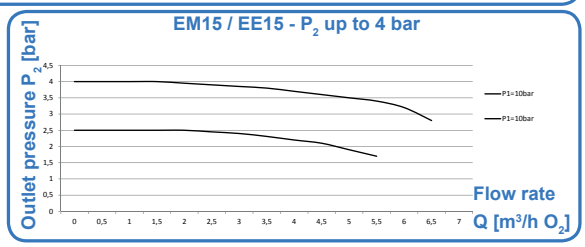

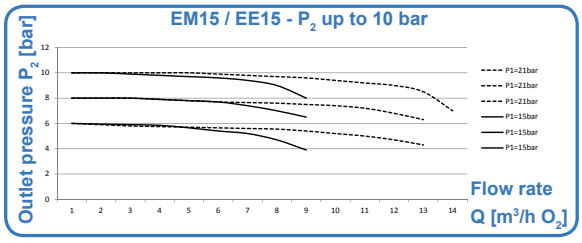

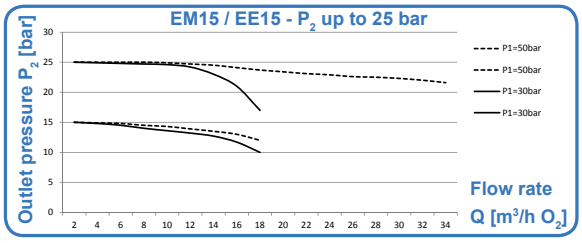

EM15 / EE15
Surface-mounted Type AW

Surface-mounted tapping point
with flow control / shut-off valve

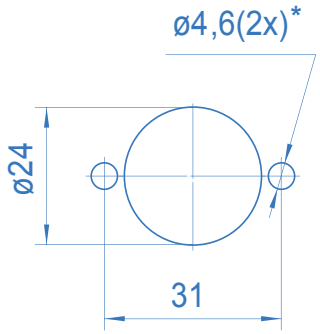

*) for self-cutting screw
ME-T-50-16-TX25-A2-DIN7500

Bore template for installation

Specifications

- The surface-mounted tapping point is used for installations into panels independent of the panel thickness.
- The surface-mounted version consists of a rear-wall connector made of brass or stainless steel respectively, a round faceplate and assembly accessories.

Technical data

Materials		
Rear-wall connector:		brass or SS 1.4404 (316L)
Covers:		Polypropylene GB30
Connections	inlet:	see ordering info
	outlet:	1/4“-NPT female
Weight		ca. 0.8 kg

Surface-mounted type with valve in the outlet

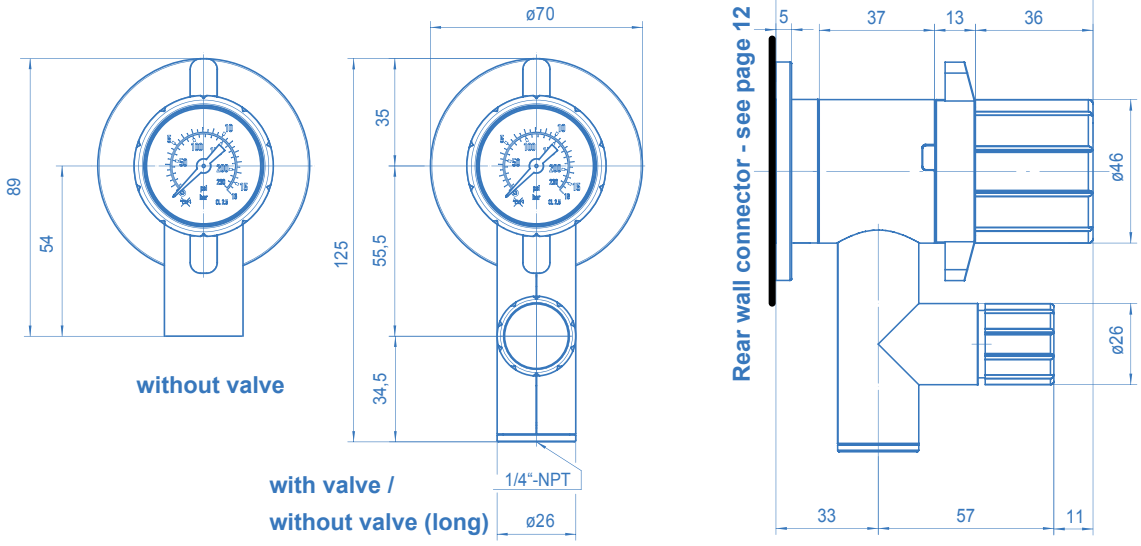

ÆRLIG INTERESSERT PRESIS

EM15 / EE15
Surface-mounted angle Type AE

Surface-mounted angle tapping point with flow control / shut-off valve

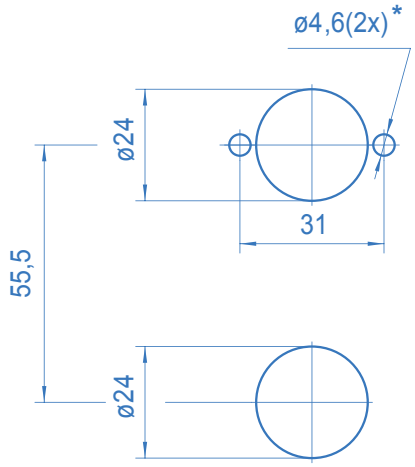

*) for self-cutting screw ME-T-50-16-TX25-A2-DIN7500

Bore template for installation

Specifications

- The surface-mounted tapping point is used for installations into panels independent of the panel thickness.
- The surface-mounted angle version consists of a rear-wall connector made of brass or stainless steel respectively, a round faceplate and assembly accessories.
- The rear outlet leads back into the panel.

Technical data

Materials		
Rear-wall connector:		brass or SS 1.4404 (316L)
Covers:		Polypropylene GB30
Connections	inlet:	see ordering info
	outlet:	1/4“-NPT female
Weight		ca. 0.8 kg

Surface-mounted angle type with valve in the outlet

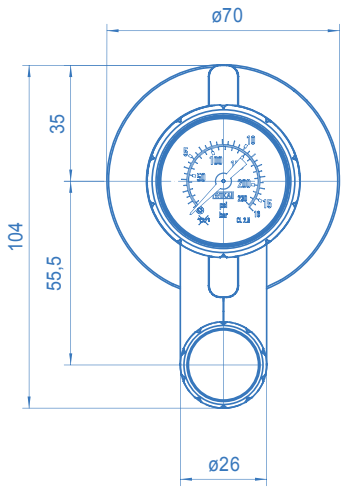

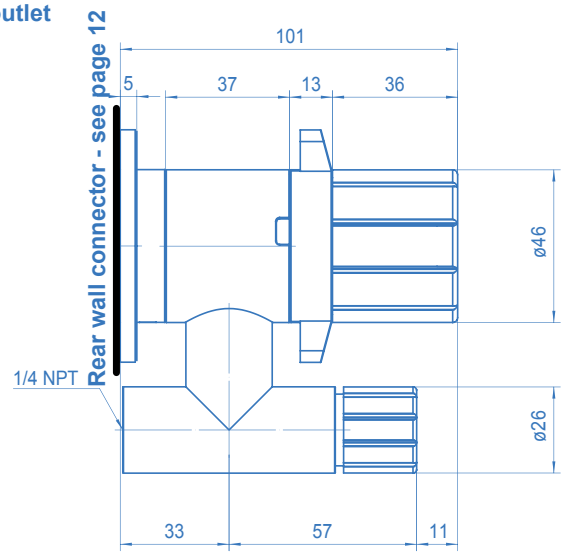

EM15 / EE15
Panel-mounted Type EP

Panel-mounted tapping point
with flow control / shut-off valve

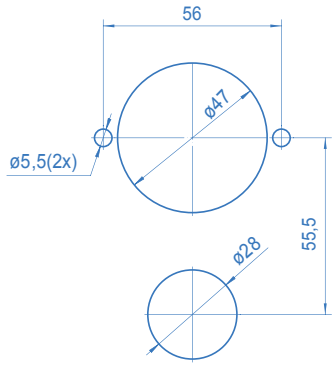

Bore template for installation

Specifications

- The panel-mounted tapping point is used for installations into panels between 2 and 8 mm thick.
- The panel-mounted version consists of an inlet adaptor made of brass or stainless steel respectively with 1/4”-NPT female thread, a plastic holder, a round faceplate (2-5 mm panel) and assembly accessories.

Technical data

Materials		
Inlet adaptor:		brass or SS 1.4404 (316L)
Holder:		Polypropylene GB30
Covers:		Polypropylene GB30
Connections	inlet:	1/4“-NPT female
	outlet:	1/4“-NPT female
Weight		ca. 0.8 kg

Panel-mounted type with valve in the outlet

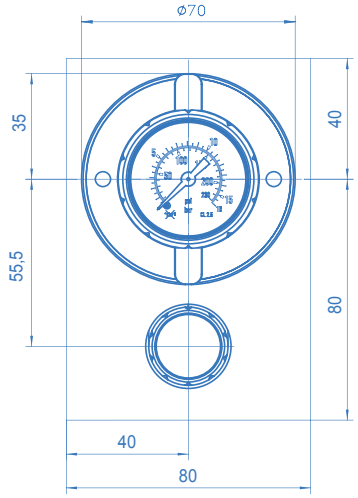

Front view with recommended modular dimensions

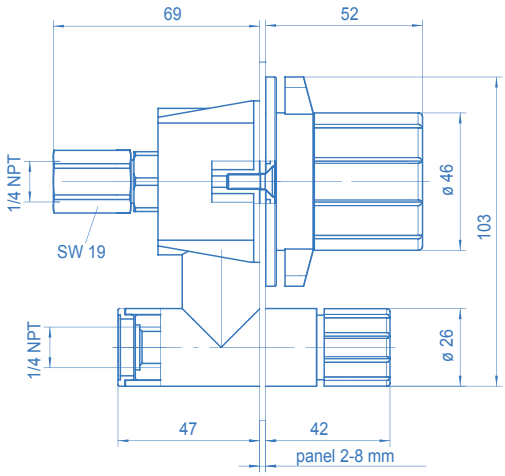

Side view with interface dimensions for a panel 2 mm thick

ÆRLIG INTERESSERT PRESIS

EM15 / EE15
Panel-mounted front Type EF

Panel-mounted front tapping point with flow control / shut-off valve

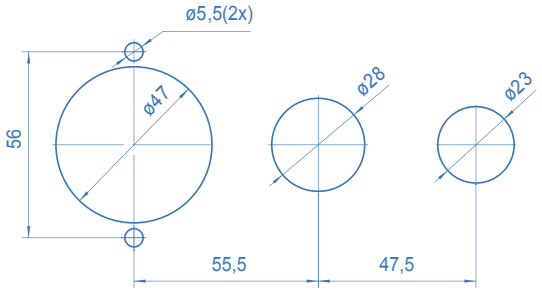

Bore template for installation

Specifications

- The panel-mounted tapping point is used for installations into panels between 2 and 8 mm thick.
- The front version consists of an inlet adaptor made of brass or stainless steel respectively with 1/4”-NPT female thread, a plastic holder, a round faceplate (2-5 mm panel) and assembly accessories.
- The outlet is to the front.

Technical data

Materials		
Inlet adaptor:		brass or SS 1.4404 (316L)
Holder:		Polypropylene GB30
Covers:		Polypropylene GB30
Connections	inlet:	1/4“-NPT female
	outlet:	1/4“-NPT female
Weight		ca. 0.8 kg

Panel-mounted front type with valve in the outlet

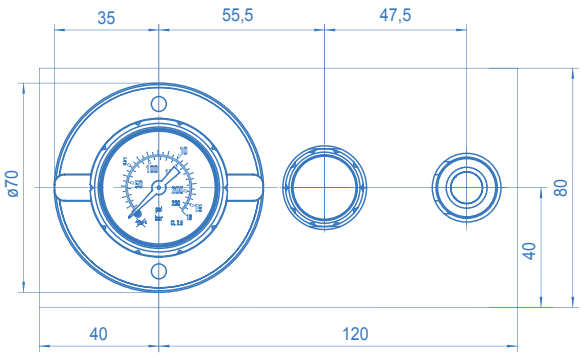

Front view with recommended modular dimensions

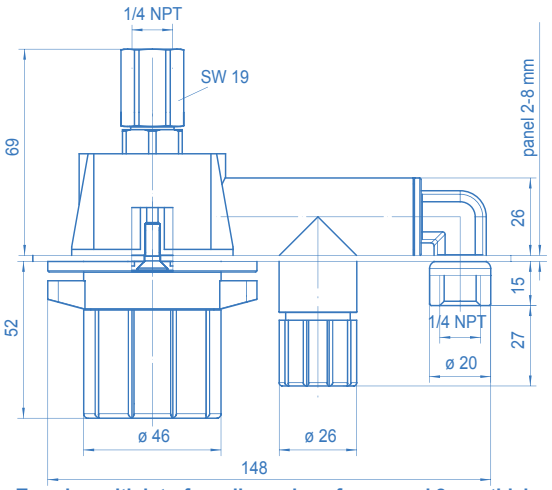

Top view with interface dimensions for a panel 2 mm thick

EM15 / EE15
Ceiling-mounted Type DC

Ceiling-mounted tapping point
with flow control / shut-off valve

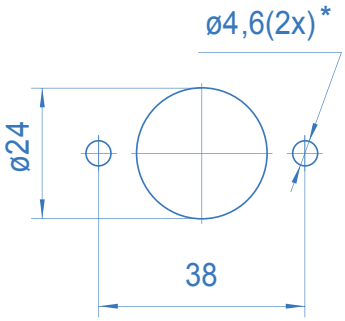

*) for self-cutting screw
ME-T-50-16-TX25-A2-DIN7500

Bore template for installation

Specifications

- The ceiling-mounted tapping point is used for installations at the ceiling.
- The ceiling-mounted version consists of a rear-wall connector made of brass or stainless steel respectively with an 1/4”-NPT female inlet, plastic covers, washer, a round faceplate and assembly accessories.

Technical data

Materials		
Rear-wall connector		
P_1 up to 40 bar		Brass
P_1 > 40 bar		SS 1.4404 (316L)
Covers:		Polypropylene GB30
Washer:		Polypropylene GB30
Connections	inlet:	1/4“-NPT female
	outlet:	1/4“-NPT female
Weight		ca. 1.2 kg

Ceiling type with valve in the outlet

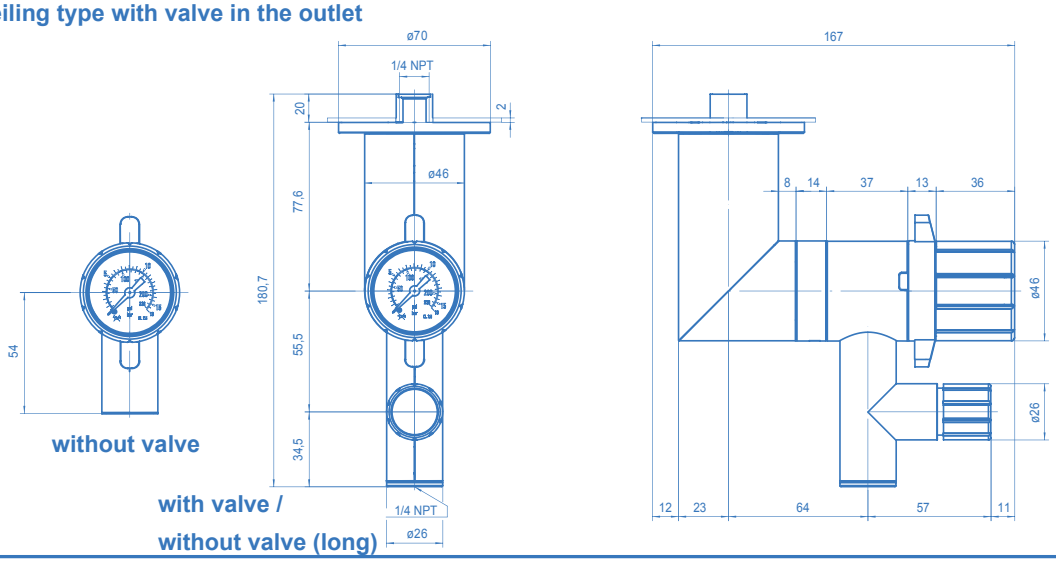

without valve

with valve /
without valve (long)

ÆRLIG
INTERESSERT
PRESIS

EM15 / EE15
Column-mounted Type SC

Column-mounted tapping point with flow control / shut-off valve

Specifications

- The column-mounted tapping point is used for installations on laboratory benches up to approx. 90 mm thickness.
- The column-mounted version consists of a metal column body, a metal connector with a tube (6x1 mm), plastic washer, plastic covers, a round faceplate and assembly accessories.
- The plastic covers of the metal column are acid and alkaline solutions resistant.

Technical data

Materials		
Connector:		SS 1.4404 (316L)
Tube:		SS 1.4404 (316L)
Column body:		Aluminium
Washer:		Polypropylene GB30
Covers:		Polypropylene GB30
Connections	inlet:	tube 6x1 mm
	outlet:	1/4“-NPT female
Weight		ca. 1.8 kg

Column-mounted type with valve in the outlet

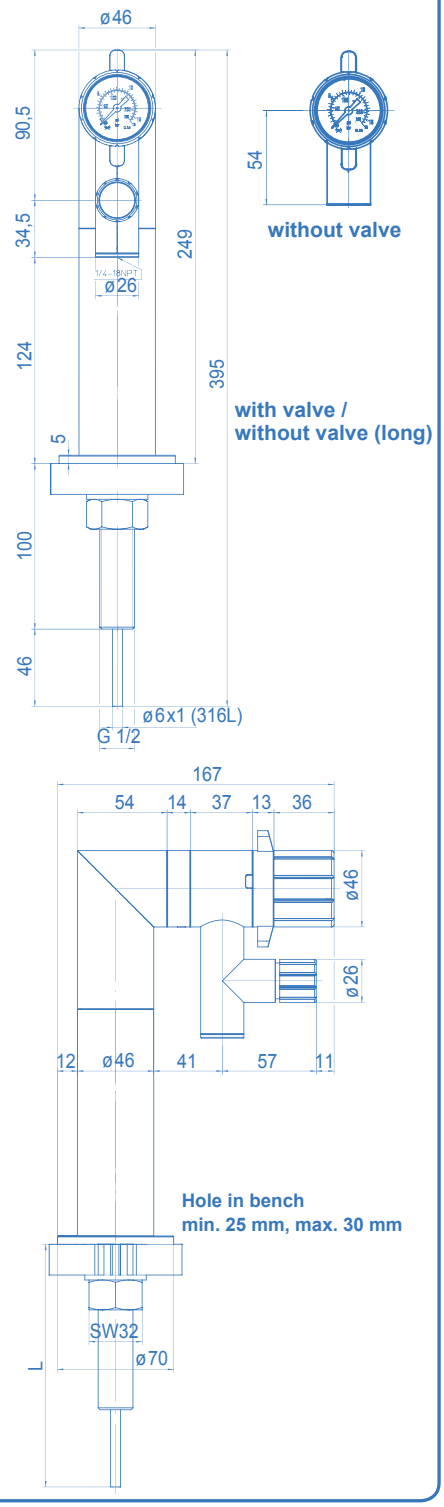

EM15 / EE15
Wall-mounted Type ES

Wall-mounted tapping point
with flow control / shut-off valve

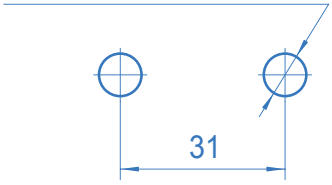

Bore template for installation

Specifications

- The wall-mounted tapping point is used for installations with surface-mounted pipe work.
- The wall-mounted version consists of a metal wall connector to connect both the gas line and the tapping point, a round faceplate and plastic covers.

Technical data

Materials		
Wall connector:		brass or SS 1.4404 (316L)
Covers:		Polypropylene GB30
Connections	inlet:	1/4“-NPT female
	outlet:	1/4“-NPT female
Weight		ca. 1.0 kg

Wall-mounted type ES

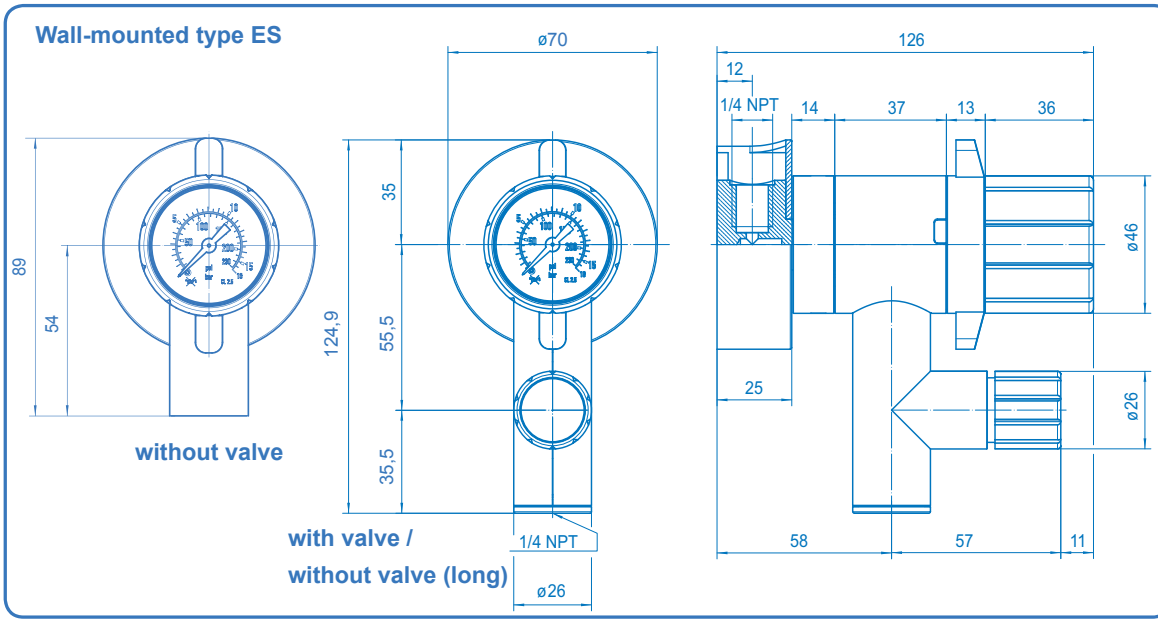

ÆRLIG INTERESSERT PRESIS

VM15 / VE15
Flow control / shut-off valves

Flow control / shut-off valve for surface mounting (angle) and panel mounting (globe version)

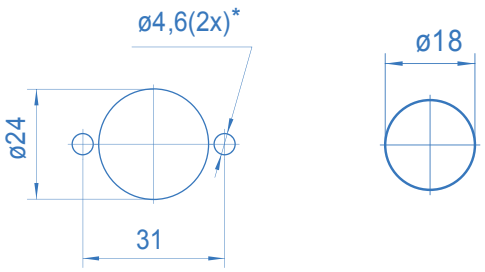

*) for self-cutting screw ME-T-50-16-TX25-A2-DIN7500

Bore template for surface mounting (left) and panel mounting (right)

Specifications

- The flow control and shut-off valves are also available in addition to the laboratory tapping points.
- The vales come as surface- or panel-mounted type.
- There is a globe and an angle version in brass or stainless steel available.
- The vales are suitable for pressure ranges up to 100 bar

Technical data

Materials		
Body, flow control spindle:		brass or SS 1.4404 (316L)
Valve seat:		PTFE
Diaphragm:		Hastelloy C276
Covers:		Polypropylene GB30
Spring:		Stainless steel 1.4310
Connections	inlet:	see drawings below
	outlet:	1/4“-NPT female
Leak rate (to atmosphere)		10^{-8} mbar l/s He

Valves for surface- and panel mounting

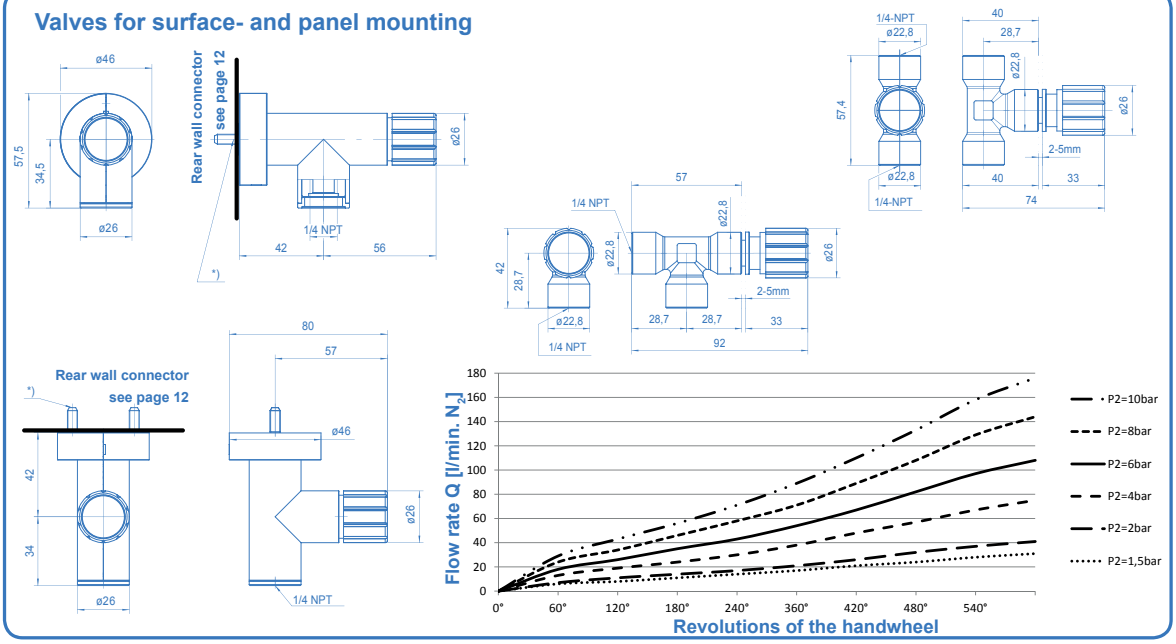

AM15 / AE15
Wall outlets

Surface-mounted wall outlets (angle and globe version)

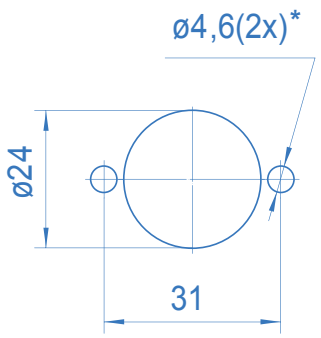

Bore template for wall outlet (surface-mounted)

*) for self-cutting screw ME-T-50-16-TX25-A2-DIN7500

Specifications

- The wall outlets are also available in addition to the laboratory tapping points.
- The outlets come as surface-mounted type.
- There is a globe and an angle version in brass or stainless steel available.

Technical data

Materials		
Body:		brass or SS 1.4404 (316L)
Valve seat:		PTFE
Covers:		Polypropylene GB30
Spring:		SS 1.4310
Connections	inlet:	see drawings below
	outlet:	1/4“-NPT female
Leak rate (to atmosphere)		10^{-8} mbar l/s He

Wall outlet (globe and angle version)

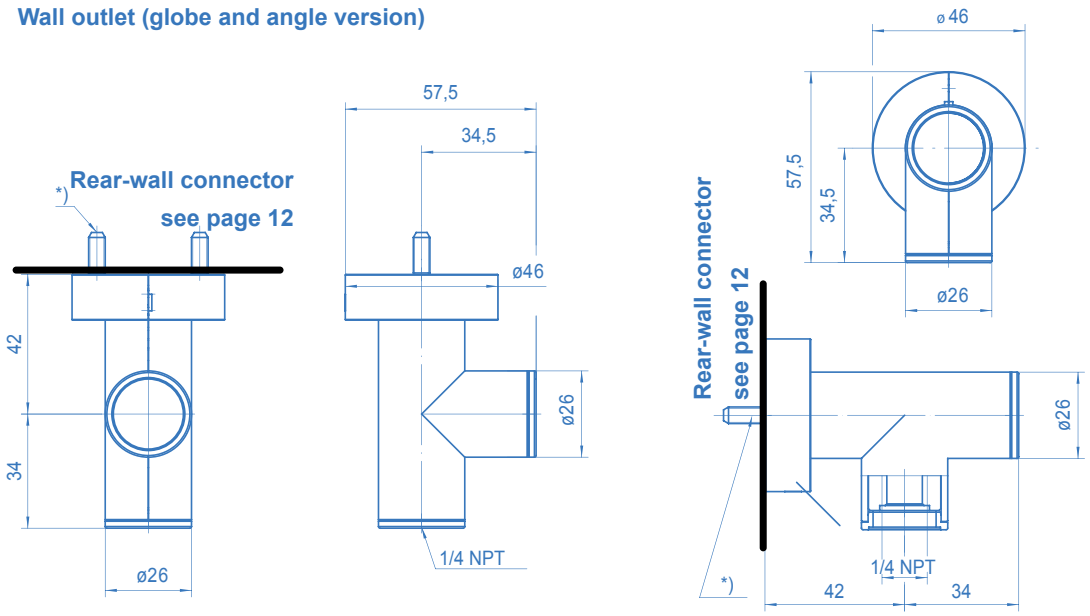

*) for self-cutting screw ME-T-50-16-TX25-A2-DIN7500

ÆRLIG INTERESSERT PRESIS

EM15 / EE15
Rear-wall connectors

L7

L30

NPT

Rear-wall connectors (for surface-mounting AW and AE) with integrated shut-off valve

Bore template and dimensions

1/4“-NPT female / 7 mm wall thickness (rear installation)

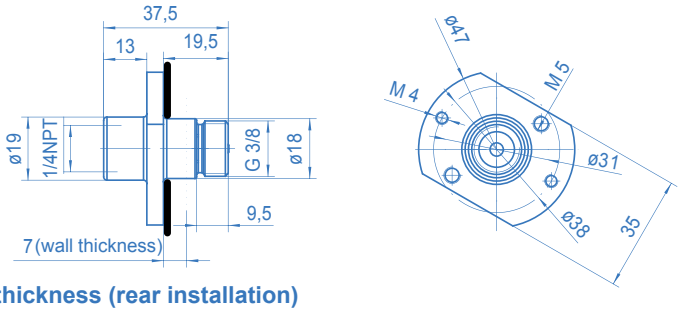

1/4“-NPT female / 30 mm wall thickness (rear installation)

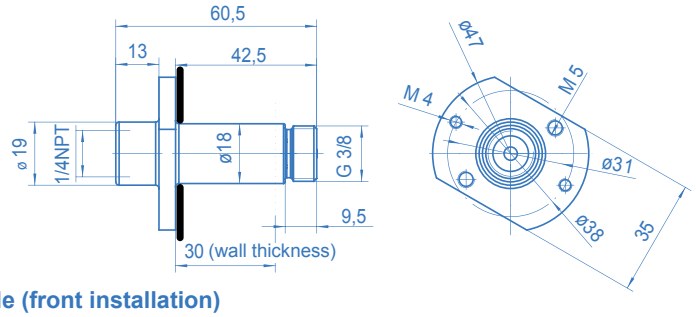

1/4“-NPT female + M24x1 male (front installation)

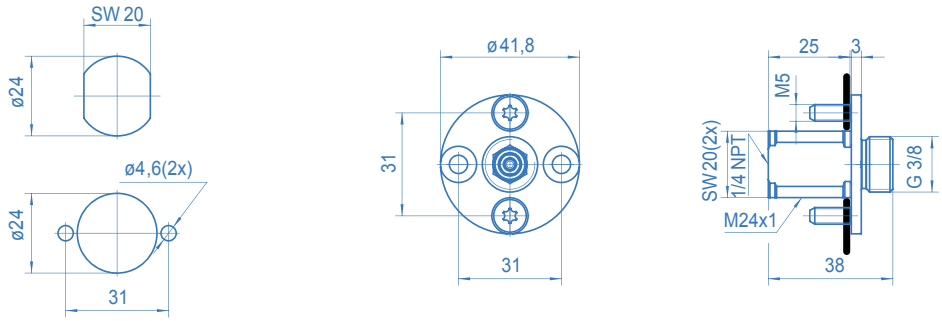

EM15 / EE15
Ordering information

Ordering information: Tapping points EM15 / EE15 series

EM 15 - AW - 10 - 0 - V - Ar/H2

Material

M	Brass
E	Stainless steel

Type

AW	Surface-mounted
AE	Surface-mounted angle version
EP	Panel-mounted
EF	Panel-mounted front
DC	Ceiling-mounted
SC	Column-mounted
ES	Wall-mounted
GG	Basic regulator w/o rear-wall conn. (G 3/8" RH)

Pressure range

1,0	max. outlet pressure 1,0 bar
1,5	max. outlet pressure 1,5 bar
2,5	max. outlet pressure 2,5 bar
5	max. outlet pressure 5 bar
10	max. outlet pressure 10 bar
16	max. outlet pressure 16 bar (piston version up to $P_{1,max.}$ = 100 bar)
25	max. outlet pressure 25 bar (piston version up to $P_{1,max.}$ = 100 bar)
65	max. outlet pressure 65 bar (piston version up to $P_{1,max.}$ = 100 bar)
0	Rear-wall connector incl. shut-off valve without pressure regulator

Gas type

Please specify with order

Outlet

0	1/4"-NPT female
CM3/6/...	Compression ring brass [DN]
CE3/6/...	Compression ring SS [DN]
SM	Hose connector brass
SE	Hose connector SS
CSM(E)	Compr. ring+hose connector
FS	Flashback arrestor
L	1/4"-NPT female **(long)**
LCM3/6/...	Compression ring brass [DN]
LCE3/6/...	Compression ring SS [DN]
LSM	Hose connector brass
LSE	Hose connector SS
LCSM(E)	Compr. ring+hose connector
V	Valve (1/4"-NPT female)
VCM(E)6	Valve with compression ring
VSM(E)	Valve with hose connector
VCSM(E)	Valve + compression ring and hose connector
B	Blind w/o pressure regulator

Inlet

0	**EP/EF:** 1/4"-NPT female
0	**DC/ES:** 1/4"-NPT female
L7	**AW/AE:** 1/4"-NPT f / 7 mm
L30	**AW/AE:** 1/4"-NPT f / 30 mm
NPT	**AW/AE:** 1/4"-NPT female + M24x1 male
CM6/8/...	Compression ring brass [DN]
CE6/8/...	Compression ring SS [DN]
CM(E)6w	angle compression ring [DN]
RS	**SC:** SS-tube stub 6x1mm
X	without rear-wall connection

Ordering information: Valve / Wall outlet

VM 15 - AW - 0 - EV - 0 - Ar/H2

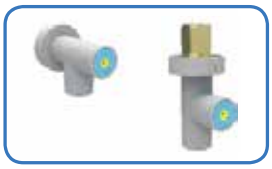

Model

V	Valve
A	Wall outlet

Material

M	brass
E	Stainless steel

Type

see above

GG	Basic unit w/o rear-wall conn. (G 3/8" RH)

Gas type (see above)

Outlet (see above)

Version

DV	Globe version
EV	Angle version

Inlet (see above)

ÆRLIG INTERESSERT PRESIS

Spectrolab® plus
Configurations / Overview

Basic unit with integrated shut-off-valve, pressure regulator and pressure gauge; pressure ranges, flow charts, materials, dimensions

Basic unit — **Type GG**

Ordering information

Laboratory equipment with rear-wall inlet and front outlet;
Connectors, materials, dimensions / drawing / template

Surface-mounted systems — **Type AW**

Ordering information

Laboratory equipment with rear-wall inlet and rear-wall outlet;
Connectors, materials, dimensions /drawing / template

Panel-mounted systems — **Type EP**

Ordering information

Laboratory equipment with top inlet and front outlet;
Connectors, materials, dimensions / drawing / template

Ceiling-mounted systems — **Type DC**

Ordering information

Column-mounted laboratory equipment (bottom inlet, front outlet);
Connectors, materials, dimensions / drawing / template

Column-mounted systems — **Type SC**

Ordering information

Wall-mounted laboratory tapping points (surface-mounted pipework);
Connectors, materials, dimensions / drawing / template

Wall-mounted systems — **Type ES**

Ordering information

Flow control valves in different configurations;
Connectors, flow charts, materials, dimensions / drawings / template

Flow control valves

Ordering information

In-/outlet fittings, hose connectors, wall outlets, etc.;
Materials, dimensions

Accessories

Ordering information

UTTAKSPOST

EM55 SPECTROLAB PLUS

Spectrolab® plus
Basic unit Type GG

Basic unit brass up to 10 bar with adapter 1/4" NPT

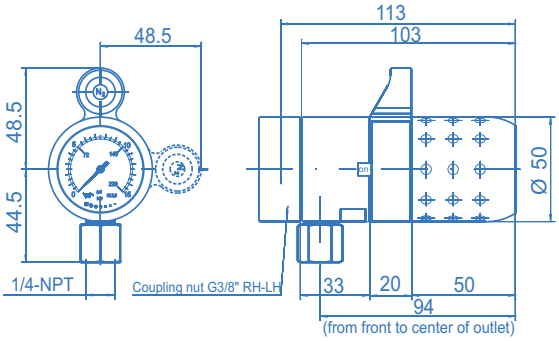

Specifications

- Spectrolab© plus - systems incorporate the functions shut-off, pressure regulation and pressure indication in one compact, ergonomic unit.
- The pressure regulator is diaphragm sensed for outlet pressures up to 10 bar and piston sensed for higher outlet pressure values.
- The acetone resistant pressure gauge is safely integrated into the adjusting handwheel to create an extremely compact device.
- The diaphragm-type shut-off valve engages in the open and closed position respectively and has an additional indicator on the adjusting knob.
- All gas-wetted components have undergone the special SPECTROCLEAN© cleaning process and have been thoroughly baked out.
- For ECD-applications the devices can be treated in an extended cleaning process.
- All equipment has been 100%-helium-leak-tested using a mass-spectrometer.
- All components are plastic-coated resistant to acid and alkaline solutions.

Technical data

Materials		
Body:	M55:	brass or
	E55:	SS 316L (1.4404)
Diaphragms:		Hastelloy C276
Other gas-wetted surfaces:		brass or SS 316L (1.4404)
Valve stem:		SS 316L (1.4404)
Valve seat:		PTFE
Body coating:		Polypropylene GF30
Leak rate		
(to atmosphere):		10^{-8} mbar l/s He
Pressure ranges		
Inlet pressure P_1	(P_2 <= 10 bar):	40 bar max.
	(P_2 >10 bar):	60 bar max.
max. outlet pressure P_2:		1,5 / 5 / 10 / 50 bar
Flow rates		see flow charts
Weight	(P_2 up to 10 bar):	700 (SS)-750g (brass)
	(P_2 > 10 bar):	800 (SS)-850g (brass)
Connectors/Porting	Inlet:	G 3/8" RH female
	Outlet:	1/4"-NPT-female

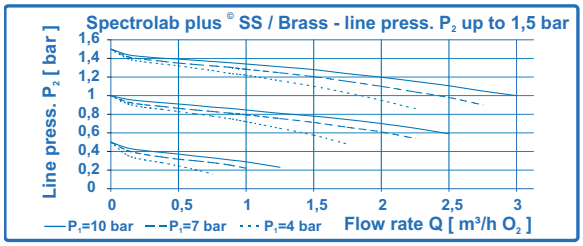

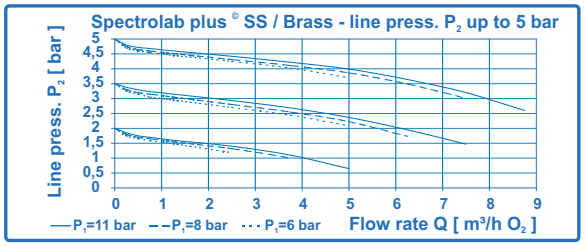

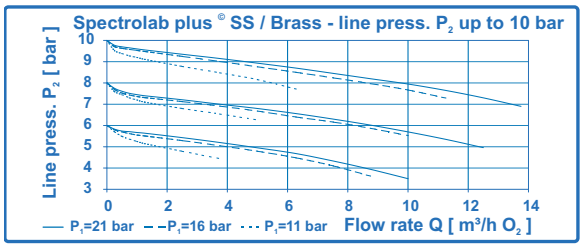

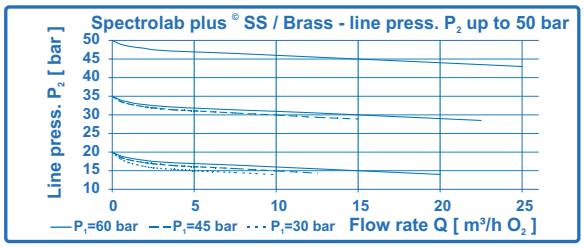

ÆRLIG INTERESSERT PRESIS

Spectrolab® plus
Surface-mounted Type AW

Basic unit c/w flow control valve (outlet 1/4"-NPT-female) and surface-mounting kit

Rear-wall connector with tube stub 8x1:

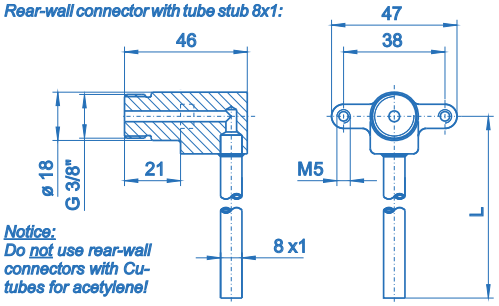

Notice:
Do not use rear-wall connectors with Cu-tubes for acetylene!

Rear-wall connector with NPT-female thread:

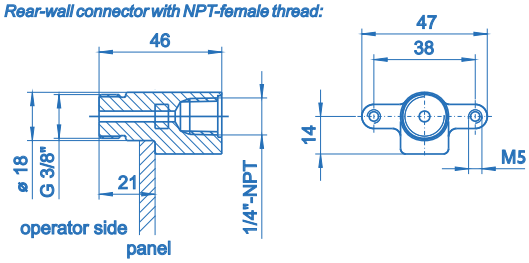

Specifications

- The surface-mounting kit for Spectrolab® plus systems is used for installations into panels between 2 mm and 8 mm.
- The mounting kit consists of a rear-wall connector made of brass or stainless steel respectively, a round fascia plate and small parts for the assembly (screws etc.).
- The rear-wall connector either has a 1/4"-NPT female thread or a tube (copper or stainless steel respectively) on the inlet side.

Technical data

Materials:	
Rear-wall connector:	brass + Cu-tube or SS 316L (1.4404)
Fascia plate:	Polypropylene
Connectors/Porting: Outlet:	1/4"-NPT female
Inlet thread:	1/4"-NPT female
Inlet tube:	Tube 8 x 1 mm
Tube length L:	750 mm (Cu-tube) 510 mm (SS 316L)

Figure: Complete surface-mounting kit (mounted position)

Surface-mounting equipment for panels from 19-25 mm thickness:

For panels between 19 and 25 mm thickness an extension of the rear-wall connector has to be used. Available in brass or in stainless steel 316L.
The minimum required bore for the extended rear-wall connector is 21 mm.

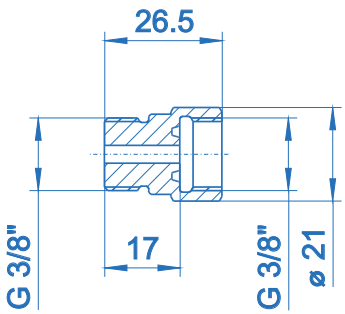

Spectrolab® plus
Panel-mounted systems Type EP

Panel-mounting kit c/w basic unit and flow control valve (mounted position)

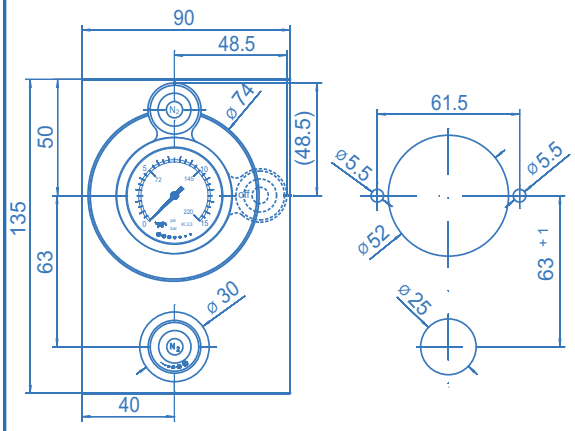

Left: Panel-mounting kit c/w basic unit - front view with recommended dimension for multiple installations.
Right: Bore template for the installation

Specifications

- The panel-mounting kit for Spectrolab® plus systems is used for installations into panels between 2 and 8 mm thick.
- The panel-mounting kit consists of an inlet adaptor with 1/4”-NPT female thread, an (internal) plastic holder, a plastic fascia plate and small parts for the assembly (screws, stickers etc.).

Technical data

Materials:	
Inlet adaptor:	Brass or SS 316L (1.4404)
Holder:	Polypropylene GF30
Fascia plate:	Polypropylene
Connectors / Porting:	
Inlet:	G 3/8” RH female
Outlet:	1/4”-NPT female

Installation examples panel-mounting systems:

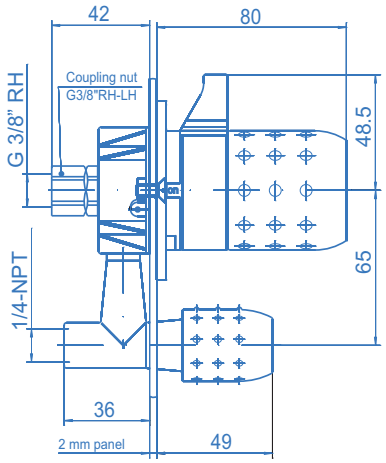

Basic unit c/w flow control valve (outlet 1/4"- NPT-female) and panel-mounting kit.
Interface dimensions for a panel 2 mm thick

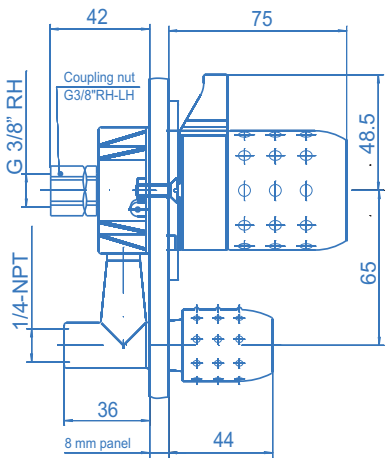

Basic unit c/w flow control valve (outlet 1/4"-NPT-female) and panel-mounting kit.
Interface dimensions for a panel 8 mm thick

ÆRLIG INTERESSERT PRESIS

Spectrolab® plus
Ceiling-mounted systems Type DC

Basic unit c/w flow control valve (outlet 1/4"-NPT female) and ceiling-mounting kit.

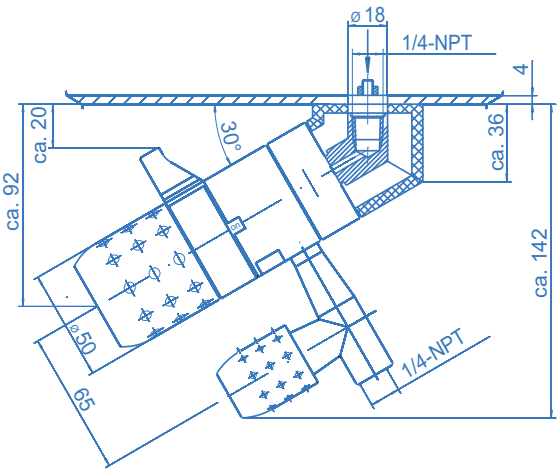

Basic unit c/w flow control valve and ceiling-mounting kit (mounted position)

Specifications

- The ceiling-mouting kit for Spectrolab© plus systems is used for installations the ceiling.
- The ceiling-mounting kit consists of a rear-wall connector, a plastic cover (two parts), a plastic washer and small parts for the assembly (screws, nuts etc.).
- The rear-wall connector has a 1/4"-NPT female thread on the inlet side.

Technical data

Materials:	
Rear-wall connector:	Brass or SS 316L (1.4404)
Cover:	Polypropylene GF30
Washer:	Polypropylene GF30
Connectors/Porting:	
Inlet:	1/4"-NPT female
Outlet:	1/4"-NPT female

Ceiling-mounting kit (mounted position)

Ceiling-mounting systems - Bore template (view from the top)

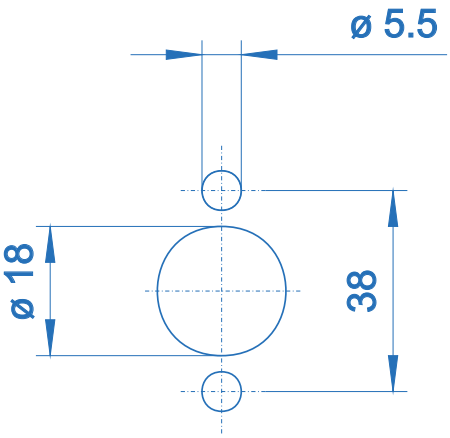

For ceilings thicker than 6 mm longer fastening screws are required!

UTTAKSPOST

EM55 SPECTROLAB PLUS

Spectrolab® plus
Column-mounted systems Type SC

Basic unit c/w flow control valve (outlet 1/4"-NPT-female) and column-mounting kit

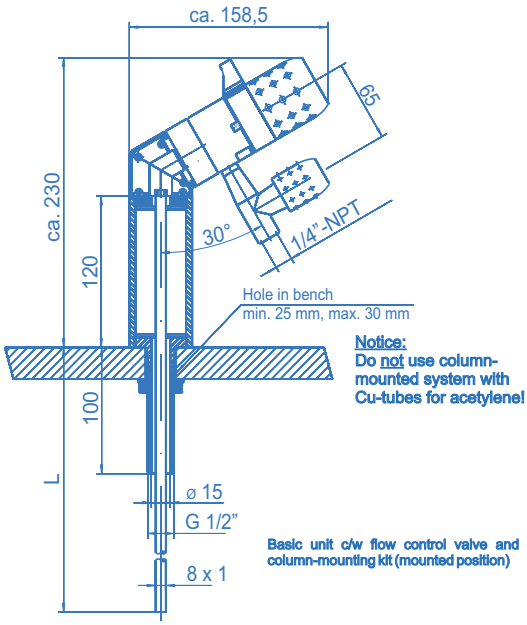

Basic unit c/w flow control valve and column-mounting kit (mounted position)

Specifications

- The column-mounting kit for Spectrolab© plus systems is used for bench-mounting installations up to approx. 90 mm thickness.
- The column-mounting kit consists of a metal column body, a metal connector with a tube (8x1 mm), a plastic washer, a plastic cover and small parts for the assembly.
- The column body is plastic-coated and resistant to acid and alkaline solutions.

Technical data

Materials	
Connectors:	Brass + Cu-tube or SS 316L (1.4404)
Column body:	Aluminium
Washer, coating:	Polypropylene GF30
In- / Outlets	
Inlet:	tube 8 x 1 mm
Outlet:	1/4"-NPT female
Installation length L	
Brass (c/w Cu-tube):	approx. 700 mm
Brass (c/w SS-tube):	approx. 475 mm
SS 316L:	approx. 475 mm

Column-mounting kit (mounted position)

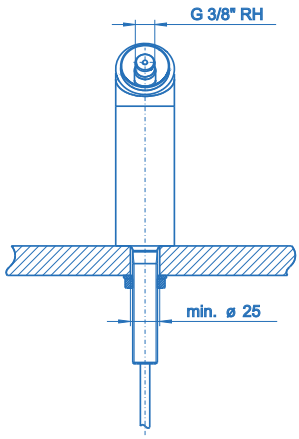

For a column-type installation into laboratory furniture a bore of at least 25 mm diameter is required.

ÆRLIG INTERESSERT PRESIS

Spectrolab® plus
Tapping points Type ES

Basic unit c/w globe-type flow control valve (outlet 1/4"-NPT-female), wall-mounting kit and inlet fitting

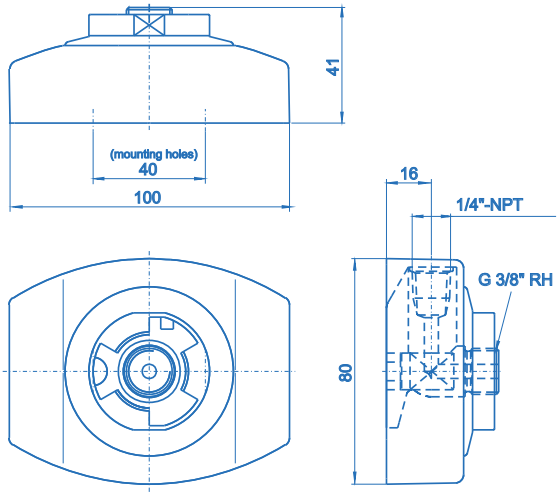

Specifications

- The wall-mounting kit for Spectrolab© plus systems is used for installations with surface-mounted pipework
- The wall-mounting kit consists of a plastic wall-cover, a plastic space cover, small parts for the assembly (screws, washers etc.) and a wall connector to connect both the gas line and the Spectrolab© plus device.

Technical data

Materials:

Wall connector:	Brass or SS 316L (1.4404)
Wall cover:	Polypropylene
Space cover:	Polypropylene

Connections/Porting: Inlet: 1/4"-NPT female
Outlet: 1/4"-NPT female

Wall-mounting kit c/w inlet fitting

Example tapping point

Basic unit c/w outlet adaptor (1/8"-male to 1/4-18 NPT-female), wall-mounting kit and inlet fitting

Spectrolab® plus
Flow control valves

Left figure: Angle-type flow control valve (outlet 1/4"-NPT female) c/w rear-wall connector, coupling nut and plastic fascia plate

Right figure: Globe-type flow control valve (outlet 1/4"-NPT female) c/w rear-wall connector, coupling nut and plastic fascia plate

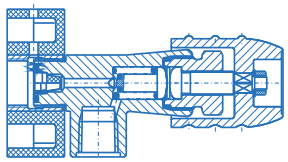

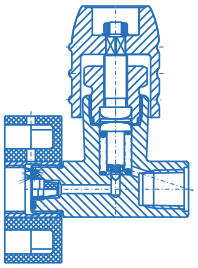

Top: Angle type flow control valve (outlet 1/4"-NPT female) c/w coupling nut.

Right: Globe-type flow control valve (outlet 1/4"-NPT female) c/w coupling nut.

Specifications

- The Spectrolab© plus - flow control valve is either used as part of the basic unit (fig. 1a/b), as a panel-mounted valve (fig. 2a/b, w/o basic unit) or as a tapping-point flow control valve (fig. 3a/b, w/o basic unit).
- The Spectrolab© plus - flow control valve is available in globe- (a) and in angle-configuration (b) in brass or in stainless steel 316L.

Fig. 1a/b: Globe-/Angle- flow control valve for the basic unit
Fig. 2a/b: Globe-/Angle- valve (panel-mounting EP)
Fig. 3a/b: Globe-/Angle- valve (tapping point)

Technical data

Materials:	
Body, flow control spindle:	Brass or SS316L (1.4404)
Valve seat:	PVDF
Diaphragm:	Hastelloy C276
Body coating:	Epoxy coated
Spring:	SS (1.4310)
Connectors/Porting:	
Inlet:	see drawings below
Outlet:	1/4"-NPT female
Leak rate (to atmosphere):	10^{-8} bar cm³/s He
Flow rates:	see flow chart (fig. 4)

fig. 1a:

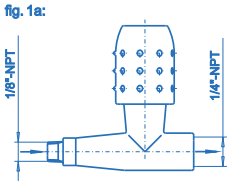

fig. 1b:

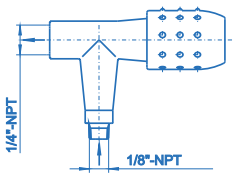

fig. 4:

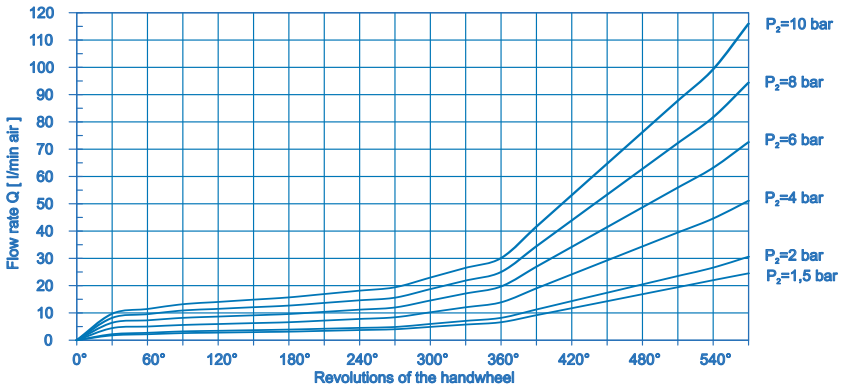

fig. 2a:

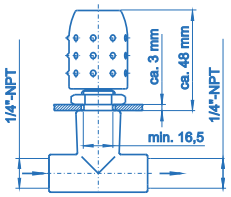

fig. 2b:

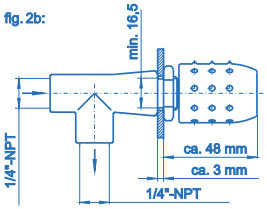

fig. 3a:

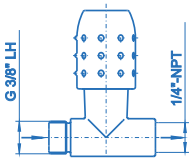

fig. 3b:

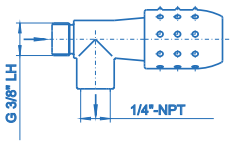

ÆRLIG INTERESSERT PRESIS

Spectrolab® plus
Accessories

fig. 1

fig. 2

fig. 3a

fig. 3b

fig. 4a

fig. 4b

fig. 5a

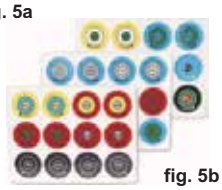
fig. 5b

In- / outlet fittings — fig. 1

Compression ring fittings 1/4”-NPT external thread to tube-diameter:	part no.: Brass:	SS:
3 mm, straight	0.291.284	0.291.281
6 mm, straight	0.291.283	0.291.280
8 mm, straight	0.049.106	0.049.033
10 mm, straight	0.291.282	0.291.279
3 mm, angle	0.291.317	0.291.320
6 mm, angle	0.291.316	0.291.319
8 mm, angle	0.049.107	0.049.035

Hose connectors — fig. 2

	Brass:	SS:
6 mm tube stub (for compression ring fitting)	0.400.032	0.400.031
1/4”-NPT male	717.02219 (chrome plated)	717.02218

Flashback arrestor (for fuel/flammable gas) — fig. 3a

	Brass:
For fuel/flammable gas applications (Outlet 1/4”-NPT female)	717.05888

Wall outlets — fig. 3b

	Brass:	SS:
Wall-outlet (outlet 1/4”-NPT female)	717.07261	717.07262 (90°-angle)

Adaptors — fig. 4a, b

	Brass:	SS:
a) Extension rear-wall-connector	717.07167	717.07168
b) Outlet adaptor 1/8”-NPT male to 1/4”-NPT female	717.07163	717.07164

Levers, Gas type labels — fig. 5a, b

a) Levers	717.08591
b) Gas type labels:	
C_2H_2, N_2O, CB, NH_3, CO_2, DL:	717.08770
CH_4, CH_4/Ar, H_2/N_2, H_2/He, W1,W2:	717.08771
Ar/H_2, additional gases W3,W4:	717.08772
CA(compressed air), SA(syntetic air):	717.08773

Ar:	717.08972	He:	717.08973	(includes one label
O_2:	717.08974	H_2:	717.08975	for the pressure
SL:	717.08976	N_2:	717.08977	regulator and one
CO_2:	717.08978	CO:	717.08958	for the valve)
BA:	717.08959	C_2H_4:	717.09660	

Spectrolab® plus
Ordering information

Ordering example:
E 55 series laboratory system Spectrolab plus

E M 55 - AW - 10 - 0 - CV - Ar/H_2

Ordering example inlet: Rear-wall-connector with 1/4" NPT-female thread

Material

M - Brass
E - Stainless steel

Configuration type

GG - Basic unit
AW - Surface-mounted
EP - Panel-mounted
DC - Ceiling-mounted
SC - Column-mounted
ES - Wall-mounted

Pressure range

1,5 - max. outlet press. 1,5 bar
5 - max. outlet press. 5 bar
10 - max. outlet press. 10 bar
50 - max. outlet press. 50 bar

Note: Not all combinations are available! Please refer to the data sheet for the respective configuration! - Especially for acetylene applications the rear-wall connector with copper tubing must not be used!

Gas type

Please specify with your order

Outlet

0 1/4"-NPT-female
CM3,6... Compression ring brass [D_n]
CE3,6... Compression ring stainless steel [D_n]
SM Hose connector brass
SE Hose connector stainless steel
CSM(E) Comp. ring fitting c/w hose connector
CV Control valve only
VCM(E)6 Valve c/w comp. ring fitting
VSM(E) Valve c/w hose connector
VCSM(E) Valve c/w comp. ring and hose connector

Inlet

0 G3/8"-female
NPT 1/4"-NPT female
CM3,6... Compr. ring brass [D_n]
CE3,6... Compr. ring stainless steel [D_n]
CM(E)6w Angle compr. ring [D_n]
RS Tube stub 8 x 1 mm

Ordering example:
55 series Valve Spectrolab plus

V M 55 - AW - 0 - EV - 0 - Ar/H_2

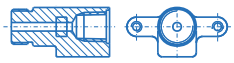

Ordering example inlet: Rear-wall-connector with 1/4" NPT-female thread

Materials (see above)

Configuration (s. a.)

Inlet (see above)

Gas type (see above)

Outlet (see above)

Valve type

DV - Globe valve
EV - Angle valve

Ordering example:
55 series wall-outlet Spectrolab plus

A M 55 - AW - 0 - 0

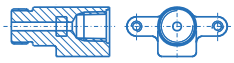

Ordering example inlet: Rear-wall-connector with 1/4" NPT-female thread

Materials (see above)

Configuration

AW - Wall-mounted only

Outlet (see above)

Inlet (see above)

ÆRLIG INTERESSERT PRESIS

Tapping point EM65-AC

Tapping point EM65-AC

Flow rates EM65-AC

Acetylene Inlet presure (P_1) [bar]	Flow rate [m^3/h] @ outlet pressure (P_2) [bar]		
	0,3	0,5	1
1,3	0,2	0,5	1

Product features

- Wall-mounting tapping point for acetylene
- Laboratory-style design
- Ergonomically designed
- Filter at the process gas inlet valve
- Diaphragm-type shut-off valves optimised for low internal volume
- Pressure regulator with high control accuracy
- Designed for easy installation
- Tapping point can be extended into multiple tapping points
- Safety devise (flashbach arrestor) in the outlet

Technical data

Inlet pressure P_1	max. 1,5 bar
Outlet pressure P_2	1,5 bar
Materials	
Body regulator and valves:	brass
Valve seat regulator:	PA
Diaphragm regulator:	EPDM
Diaphragm valve:	Hastelloy C276
Filter:	Sintered SS 316L
Connectors	1/4"-NPT female
Temperature range	-30°C to +60°C
Leak rate	< 10^{-3} mbar l/s He
Pressure gauges	Safety pressure gauges ISO5171/Kl1.6/NG50
Weight	2,6 kg

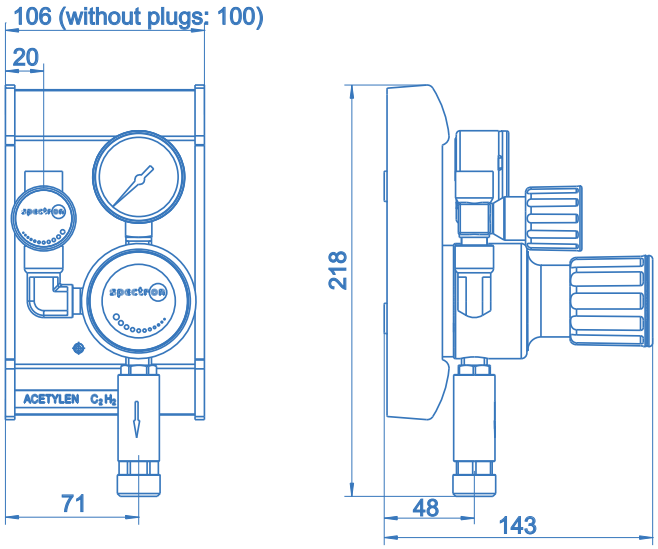

Flowmeter FLM32

Flowmeter
FLM32

Dimensions

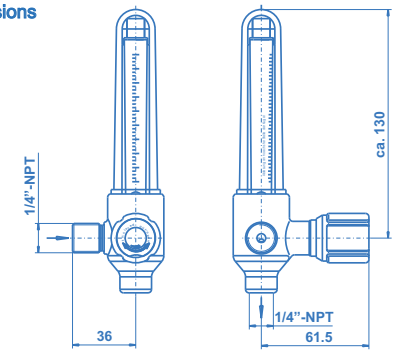

Product features

- Flowmeter for use on pressure regulators with inert high-purity gases up to quality 6.0 for exact adjustment and indication of the flow rate
- Laboratory-style design
- Ergonomical and compact design
- With integrated control valve

Technical data

Inlet pressure (2 types):	1,4 or 4 bar resp.
Materials	
Body:	chrome-plated brass
Soft goods:	Viton (FKM)
Flowmeter:	glass
Outer tube:	Polycarbon
Control spindle:	Stainless steel
Connectors	
Inlet:	1/4"-NPT male
Outlet:	1/4"-NPT female
Temperature range	-30°C to +60°C
Leak rate (to atmosphere)	$1x10^{-6}$ mbar l/s He
Weight	ca. 0,4 kg

Table of flow rates for FLM32 with %-scale at 1,4 bar and 4 bar resp. Flow rates at full scale (blue figures for a calibrating pressure of 1,4 bar)

Inlet pressure (bar gauge) [bar]	l/h nitrogen at a calibrating pressure 4 bar	1,4 bar
0,5	164	237
1	190	274
1,4	208	300
2	232	-
2,5	251	-
3	268	-
3,5	285	-
4	300	-

Equation a) $Q = f_1 \times Q_{100\%}$

with $f_1 = \sqrt{\frac{P_{SOLL}}{P_{KAL}}}$

P ➡ absolute

For other gases:
Equation b) $Q = f_2 \times Q_{N2}$

Example: gas type nitrogen
With an outlet pressure of 1,4 bar set at the pressure regulator the control valve is opened until the top of the ball is level with the 100% mark on the metering glass. Now 300 l/h N_2 flow through the flowmeter. At 50 % this means 150 l/h etc. The setting should not be below the 10% mark.

For Outlet pressure values P_{SOLL} below the calibrating pressure P_{KAL} the 100%-flow rate may be calculated using **Equation a)**, where the pressure values must be applied in **absolute pressure** values.

For other gas types the 100%-flow rate for the applicable outlet pressure and calibrating pressure can be calculated from the N_2 flow rate using **Equation b)**.

The **factor f_2** (see table) can be calculated using

$$f_2 = \sqrt{\frac{\text{density}_{\text{reference gas}}}{\text{density}_{\text{process gas}}}}$$

where density $_{\text{reference gas}}$ is the density of nitrogen.

factor f_2

synth. air	0.983	argon	0.837
CO_2	0.792	hydrogen	3.75
methane	1.32	helium	2.63
oxygen	0.965		

ÆRLIG INTERESSERT PRESIS

Flowmeter FLM32

spectro lab

Sectional drawing

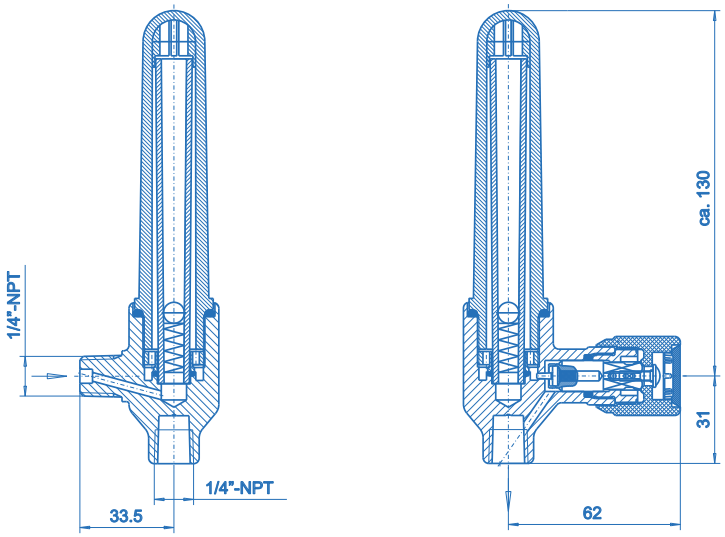

Ordering information:
Flowmeter FLM32

FLM32 - 1,4

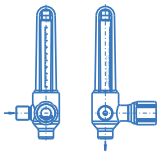

Series

FLM32 - Flowmeter FLM32

Calibrating pressure

1,4 - 1,4 bar
4 - 4 bar

Specifications

- SPECTROLAB - components guarantee maximum quality by using high grade materials and a quality assurance program acc. to ISO 9001.
- All components which come into contact with the medium are cleaned in an ultrasonic cleaning system (CFC-free) with the special cleaning process SPECTRO-CLEAN® and are then baked out.
- SPECTROLAB - components undergo a 100% Helium-leak-test.

Important note regarding component selection

- In order to assure safe operation it is essential to take the configuration of the whole system into account when selecting a control valve.
- The function of the valve, the compatibility of the materials, correlating temperature ranges, correct installation, operation and maintenance in accordance with the relevant regulations are the responsibility of the system designer and the user.

Pigtails / Cylinder brackets

Pigtail SR-200-DIN 10-N2
with 200 bar manual connection
for DIN-cylinder valves
(for non-corrosive gases)

Dimensions standard-pigtail
with manual connection (200 bar)

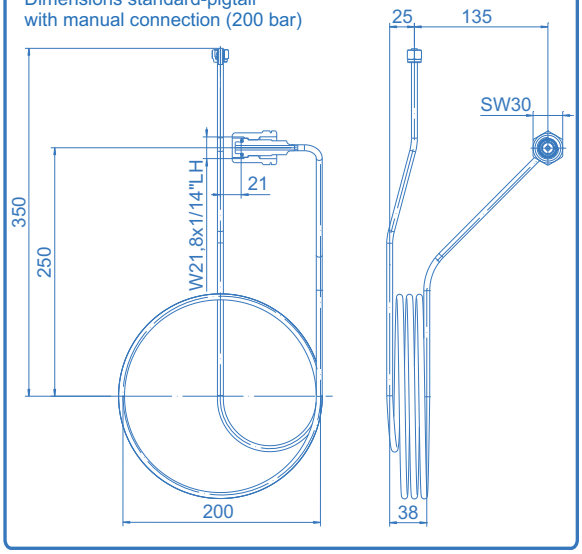

Product features

- Stainless steel-pigtail for the connection of a gas cylinder to BE/BM series pressure control panels
- For gases up to quality 6.0
- 4 windings for high flexibility in all directions
- Manual cylinder valve connector for easy installation and cylinder change without tools (for CEN-connections and for DIN-connectors for non-corrosive gases only)
- Compact pigtails also suitable for gas cabinets or applications with other space constraints

Technical data

Nominal pressure	200 / 300 bar
Nominal size	4 mm
Materials	SS 1.4571 (SS 316)
Nut (for non-corrosive gases)	brass
Leak rate	< 10^{-8} mbar l/s He
Cylinder connection	acc. to international standards and gas type
Cylinder gasket	depending on gas type
Outlet connection	compression ring fitting 6 mm (stainless steel)

Valve connector types:

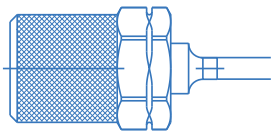

Cylinder valve connector
with knurled handwheel for
valves acc. to DIN 477
(for non-corrosive gases only)

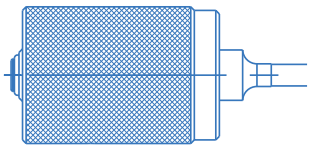

Cylinder valve connector
with knurled nut for 300 bar
(CEN-connectors)

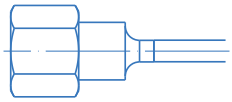

1/4"-NPT-connector with internal
thread for the installation of
individual cylinder connectors
(EURO-pigtail)

ÆRLIG
INTERESSERT
PRESIS

Pigtails / Cylinder brackets

spectrolab

Additional configurations upon request!

Ordering information:
Pigtails for BM/BE series pressure control panels

SR - 200 - DIN 10 - N_2

Type

SR - pigtails for BM/BE series pressure control panels

Nominal pressure

200 - max. 200 bar
300 - max. 300 bar (CEN)

Gas type

Please specify gas type (gasket material selection)

Cylinder connection

Detailled description of the cylinder connection (e. g. BS no. 3 for 200 bar or ISO 30 for 300 bar)

Product features cylinder brackets:

- Cylinder bracket to protect gas cylinders against falling and to position the cylinder
- Suitable for 20-ltr- and 50-ltr gas cylinders

Technical data

Materials		
Bracket:		cast aluminium, blasted
Chain:		zink-plated Steel
Depth T	20 l cylinder:	130 mm
	50 l cylinder:	180 mm
Ordering no.		718.32028

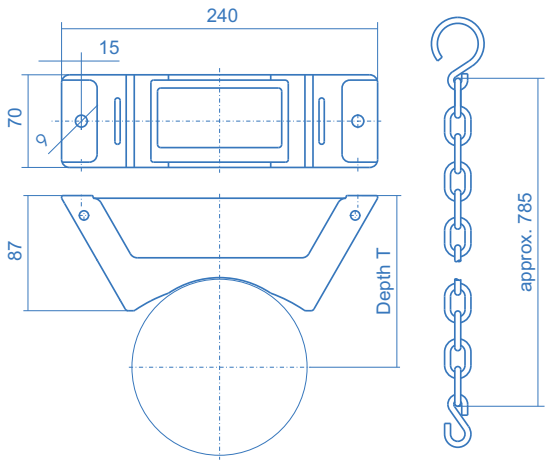

Figures: Cylinder bracket in front and top view
Figure right: Chain

Specifications

- SPECTROLAB - pigtails guarantee maximum quality by using high grade materials and a quality assurance program acc. to ISO 9001.
- All components which come into contact with the medium are cleaned in an ultrasonic cleaning system (CFC-free) with the special cleaning process SPECTRO-CLEAN® and are then baked out.
- SPECTROLAB - components undergo a 100% function- and Helium-leak-test.

Manual connectors

- All pigtails with DIN cylinder connections for non-corrosive gases and the pigtails with 300 bar (CEN-) connectors come with manual connectors (DIN: plastic handwheel on hex nut; CEN: knurled nut). Pigtails with connectors acc. to other standards come with a hex nut.

Important note regarding component selection

- In order to assure safe operation it is essential to take the configuration of the whole system into account when selecting a pressure regulator.
- The function of the regulator, the compatibility of the materials, correlating temperature ranges, correct installation, operation and maintenance in accordance with the relevant regulations are the responsibility of the system designer and the user.

High pressure hoses HDS

spectrotec

Product features

- Quality high pressure hoses for non-corrosive industrial gases, oxygen and acetylene
- 90° elbow on inlet
- Design in all essential points according to DIN EN ISO 14113 (Rubber and plastics hose)
- Design in all essential points according to EN ISO 10380 (Corrugated metal hose)
- Anti-whip cord (not for acetylene)
- Non-return-valve at cylinder- or bundle connection for acetylene to avoid air getting into the hose

Technical data

Working pressure P	max. 300 bar max. 25 bar (Acetylene)
Nominal diameter	DN 6 - DN 12
Length	0,5 - 3,5 m
Materials	
Industrial gases	
Inner surface:	Polyester
Outer surface:	Polyurethane
Reinforcement:	Aramid fibre
Fitting:	1.4305
Oxygen:	stainless steel
Acetylene:	rubber
Connections	
Inlet:	cylinder connection or 1/4”-NPT female
Outlet:	1/4”-NPT female
Temperature range	-20°C to +60°C
Leak rate	$<10^{-3}$ mbar l/s He

High pressure hose HDS - PE for industrial gases except oxygen and acetylene

Ordering information:
High pressure hose for **industrial gases** except oxygen and acetylene HDS - PE

HDS - PE - 300 - 3,5M - DIN 477-6 - 0 - CM 1/4

Pressure range

200 - 200 bar
300 - 300 bar

Length

0,5M - 0,5 meter (DN 8)
1M - 1,0 meter (DN 8)
2M - 2,0 meters (DN 8)
3,5M - 3,5 meters (DN 8)

Inlet

Cylinder- or bundle connection:
Specify relevant standard and connection type required

Outlet

Compression fitting (brass)
CM 1/4 - 1/8” / 1/4” / 1/2” -
CM 6 - 3 / 6 / 8 / 10 / 12 mm
Compression fitting (stainless steel)
CE 1/4 - 1/8” / 1/4” / 1/2” -
CE 6 - 3 / 6 / 8 / 10 / 12 mm

KK 1/2 - G 1/2” bull nose+union nut
0 - 1/4”-NPT female

Cylinder connection

0 - brass
M - chrome plated brass

ÆRLIG INTERESSERT PRESIS

NOTAT

NOTAT

ÆRLIG
INTERESSERT
PRESIS

NOTAT

iTec AS
Hegdalveien 80
3261 Larvik
Tlf. (+47) 95 800 700
itec@itec.as

ET FØRSTEVALG FOR INDUSTRIEN