Transformers & Inductive Components

DANTRAFO Group

DANTRAFO A/S, Transformator-Teknik, Dantrafo Electronics Suzhou

Catalogue 18

The Company

Since its foundation in 1979 DANTRAFO Group has grown to become one of the leading manufacturers of transformers and inductive components in Northern Europe.
DANTRAFO Group has grown organically and by acquisitions and has been a major player in consolidating the Scandinavian transformer industry during 30 years. In 2009 a generation shift was completed and DANTRAFO Group was taken over by Ivan Gam, who is now CEO.

Today a mix of custom and standard products are manufactured at 3 plants located in China, Sweden and Denmark. The manufacturing platform secures competitiveness for all products where production in Europe is highly automated and production in China, with its low labour cost base, is ideal for labour intensive products.

DANTRAFO Group are serving a wide base of professional customers including global leaders like Danfoss, Grundfos, Bang & Olufsen, VESTAS, Siemens and Bombardier.

With factories in Denmark, Sweden and China DANTRAFO Group provide a global solution to your transformer needs. Through direct ownership of all plants we can ensure quality, delivery, flexibility and support your innovations from idea generation to fulfillment.

Quality

Since 1992 DANTRAFO Group has been ISO9001 certified. We produce products with long term reliability and best in class quality.

CSR

In DANTRAFO Group we respect our Social Responsibility and we strive to comply with all Environmental Obligations. DANTRAFO Group have joined the UN Global Compact and the principles are incorporated in our business model.

It has always been the practice at DANTRAFO Group to welcome an open dialogue with customers, employees and the community in order to find solutions acceptable to all parties.

Disclaimer

DANTRAFO accepts no liability for the content of this catalouge, the correctness of information contained cannot be guaranteed. Any liability for damage resulting directly or indirectly from use of this catalouge is precluded.

Product Overview

Encapsulated PCB transformer	4
Encapsulated Low Profile PCB Transformer	10
Open PCB Transformer	16

Single Phase Transformer	17
Control and Isolation Transformer	18
Universal Control and Isolation Transformer	22
Single Phase UI Transformer	26
Enclosed Single Phase UI Transformer	28

Three Phase Transformer	30
Enclosed Three Phase Transformer	35
Autotransformer	37

Toroid Transformer	38
C-core Transformer	41

Plastic Enclosed single Phase Transformer	43
Enclosed Illumination Transformer	45
Net Adapter	47

Power Supplies, Single and 3 Phase	49
Single Phase Power Supplies	50
3 Phase Power Supplies	51

HF Transformer	52
Choke	58
Line/Audio Transformer	60
Current Sensing Transformer	61
Customer Specific Products	62

Encapsulated PCB transformer

General information

Encapsulated PCB transformers are widely used in electronic applications where a cost effective low voltage source is needed. The DANTRAFO Group is well known as a manufacturer of encapsulated PCB transformer in high quality. Most products are vacuum encapsulated to secure maximum reliability.

Standard program

In the standard program both CCA series and UL series are available, Primary voltage are 115 or 230V, Secondary voltage from 6-24V, Frequency at 50Hz - 60Hz, Isolation class available are: Ta40/B Ta70/B, IP class IP00. For other values not supported by the standard program please contact us for a customized solution.

Standard Program types

EI	VA	H	m	n	$P_{L/W}$
30/5	0,5-0,6	15	42g	38%	1,3
30/10,5	1,0-1,5	23	70g	51%	0,6
30/12,5	1,5-2,1	25	80g	52%	0,65
30/15,5	2,0-2,4	28	95g	54%	0,7
30/18	2,3-2,8	30	105g	55%	0,75
38/13,6	2,5-4,5	29	146g	68%	0,60
42/14,8	4,8-6,0	32	190g	63%	1,25
48/16,8	7,0-10	35	272g	74%	1,85
48/20,5	9,8-13	39	320g	72%	2,25

All EI30/xx types and EI38/13 CCA types are inherently short-circuit proof.

Tecnical specifications:

Primary voltage max.	50V-400V
Secondary voltage max.	48V
Frequency	50/60Hz
Power	0.5VA -13VA
Insulation class	B or F
Ambient temperature	40°C
IP class	00
Standards and approvals	IEC61558-2-6
UL Recognized	UL1446/UL506

EI 30/5 Standard series

		230V	230V	230V	115V	115V	115V
Secon-dary voltage	No load voltage	CCA Ta 40/B 0,6VA	CCA Ta 70/B 0,5VA	UL Ta 70/B 0,5VA	CCA Ta 40/B 0,6VA	CCA Ta 70/B 0,5VA	UL Ta 70/B 0,5VA
6	9	DT 1010200	DT 1010224	DTB 1110224	DT 1010212	DT 1010236	DTB 1110236
9	14	DT 1010201	DT 1010225	DTB 1110225	DT 1010213	DT 1010237	DTB 1110237
12	19	DT 1010202	DT 1010226	DTB 1110226	DT 1010214	DT 1010238	DTB 1110238
15	24	DT 1010203	DT 1010227	DTB 1110227	DT 1010215	DT 1010239	DTB 1110239
18	29	DT 1010204	DT 1010228	DTB 1110228	DT 1010216	DT 1010240	DTB 1110240
21	34	DT 1010205	DT 1010229	DTB 1110229	DT 1010217	DT 1010241	DTB 1110241
24	39	DT 1010206	DT 1010230	DTB 1110230	DT 1010218	DT 1010242	DTB 1110242
2x4,5	2x7	DT 1010207	DT 1010231	DTB 1110231	DT 1010219	DT 1010243	DTB 1110243
2x6	2x9	DT 1010208	DT 1010232	DTB 1110232	DT 1010220	DT 1010244	DTB 1110244
2x9	2x14	DT 1010209	DT 1010233	DTB 1110233	DT 1010221	DT 1010245	DTB 1110245
2x12	2x19	DT 1010210	DT 1010234	DTB 1110234	DT 1010222	DT 1010246	DTB 1110246
2x15	2x24	DT 1010211	DT 1010235	DTB 1110235	DT 1010223	DT 1010247	DTB 1110247

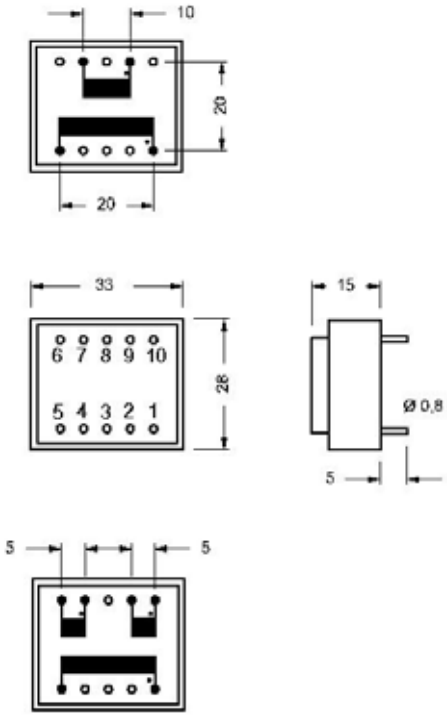

EI 30/10,5 Standard series

		230V	230V	230V	115V	115V	115V
Sec-ondary voltage	No load voltage	CCA Ta 40/B 1,2VA	CCA Ta 70/B 1,0VA	UL Ta 70/B 1,5VA	CCA Ta 40/B 1,2VA	CCA Ta 70/B 1,0VA	UL Ta 70/B 1,5VA
6	9	DT 1010000	DT 1010024	DTB 1110024	DT 1010012	DT 1010036	DTB 1110036
9	14	DT 1010001	DT 1010025	DTB 1110025	DT 1010013	DT 1010037	DTB 1110037
12	19	DT 1010002	DT 1010026	DTB 1110026	DT 1010014	DT 1010038	DTB 1110038
15	24	DT 1010003	DT 1010027	DTB 1110027	DT 1010015	DT 1010039	DTB 1110039
18	29	DT 1010004	DT 1010028	DTB 1110028	DT 1010016	DT 1010040	DTB 1110040
21	34	DT 1010005	DT 1010029	DTB 1110029	DT 1010017	DT 1010041	DTB 1110041
24	39	DT 1010006	DT 1010030	DTB 1110030	DT 1010018	DT 1010042	DTB 1110042
2x4,5	2x7	DT 1010007	DT 1010031	DTB 1110031	DT 1010019	DT 1010043	DTB 1110043
2x6	2x9	DT 1010008	DT 1010032	DTB 1110032	DT 1010020	DT 1010044	DTB 1110044
2x9	2x14	DT 1010009	DT 1010033	DTB 1110033	DT 1010021	DT 1010045	DTB 1110045
2x12	2x19	DT 1010010	DT 1010034	DTB 1110034	DT 1010022	DT 1010046	DTB 1110046
2x15	2x24	DT 1010011	DT 1010035	DTB 1110035	DT 1010023	DT 1010047	DTB 1110047

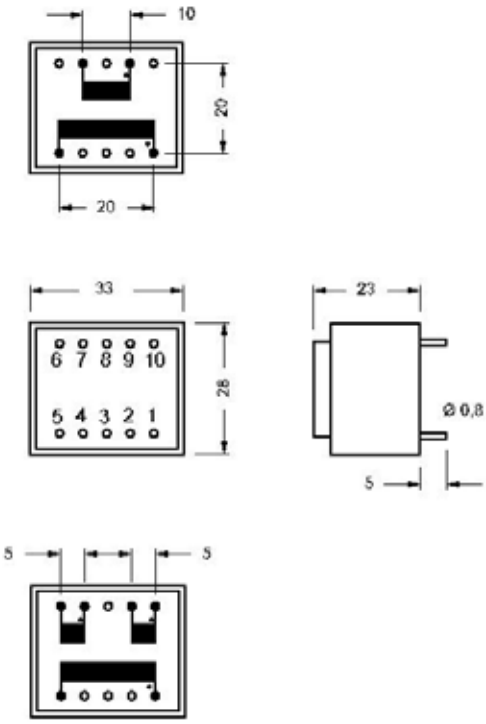

EI 30/12,5 Standard series

		230V	230V	230V	115V	115V	115V
Sec-ondary voltage	No load voltage	CCA Ta 40/B 1,8VA	CCA Ta 70/B 1,5VA	UL Ta 70/B 2,1VA	CCA Ta 40/B 1,8VA	CCA Ta 70/B 1,5VA	UL Ta 70/B 2,1VA
6	9	DT 1010050	DT 1010074	DTB 1110074	DT 1010062	DT 1010086	DTB 1110086
9	14	DT 1010051	DT 1010075	DTB 1110075	DT 1010063	DT 1010087	DTB 1110087
12	19	DT 1010052	DT 1010076	DTB 1110076	DT 1010064	DT 1010088	DTB 1110088
15	24	DT 1010053	DT 1010077	DTB 1110077	DT 1010065	DT 1010089	DTB 1110089
18	29	DT 1010054	DT 1010078	DTB 1110078	DT 1010066	DT 1010090	DTB 1110090
21	34	DT 1010055	DT 1010079	DTB 1110079	DT 1010067	DT 1010091	DTB 1110091
24	39	DT 1010056	DT 1010080	DTB 1110080	DT 1010068	DT 1010092	DTB 1110092
2x4,5	2x7	DT 1010057	DT 1010081	DTB 1110081	DT 1010069	DT 1010093	DTB 1110093
2x6	2x9	DT 1010058	DT 1010082	DTB 1110082	DT 1010070	DT 1010094	DTB 1110094
2x9	2x14	DT 1010059	DT 1010083	DTB 1110083	DT 1010071	DT 1010095	DTB 1110095
2x12	2x19	DT 1010060	DT 1010084	DTB 1110084	DT 1010072	DT 1010096	DTB 1110096
2x15	2x24	DT 1010061	DT 1010085	DTB 1110085	DT 1010073	DT 1010097	DTB 1110097

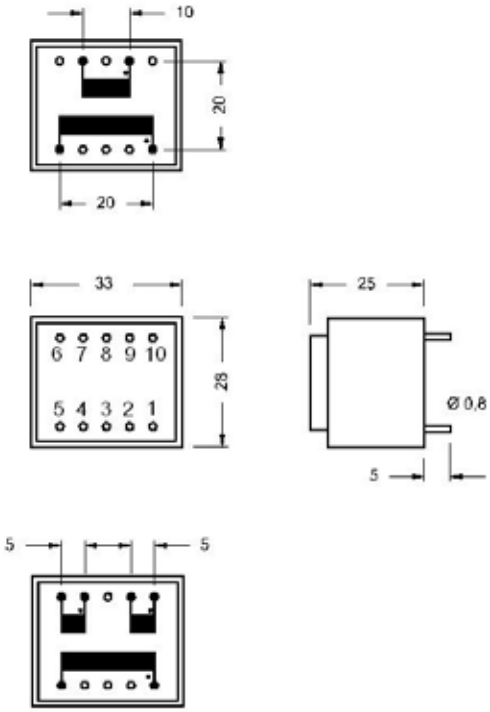

EI 30/15,5 Standard series

		230V	230V	230V	115V	115V	115V
Sec-ondary voltage	No load voltage	CCA Ta 40/B 2,4VA	CCA Ta 70/B 2,0VA	UL Ta 70/B 2,4VA	CCA Ta 40/B 2,4VA	CCA Ta 70/B 2,0VA	UL Ta 70/B 2,4VA
6	9	DT 1010100	DT 1010124	DTB 1110124	DT 1010112	DT 1010236	DTB 1110136
9	14	DT 1010101	DT 1010125	DTB 1110125	DT 1010113	DT 1010237	DTB 1110137
12	19	DT 1010102	DT 1010126	DTB 1110126	DT 1010114	DT 1010238	DTB 1110138
15	24	DT 1010103	DT 1010127	DTB 1110127	DT 1010115	DT 1010239	DTB 1110139
18	29	DT 1010104	DT 1010128	DTB 1110128	DT 1010116	DT 1010240	DTB 1110140
21	34	DT 1010105	DT 1010129	DTB 1110129	DT 1010117	DT 1010241	DTB 1110141
24	39	DT 1010106	DT 1010130	DTB 1110130	DT 1010118	DT 1010242	DTB 1110142
2x4,5	2x7	DT 1010107	DT 1010131	DTB 1110131	DT 1010119	DT 1010243	DTB 1110143
2x6	2x9	DT 1010108	DT 1010132	DTB 1110132	DT 1010120	DT 1010244	DTB 1110144
2x9	2x14	DT 1010109	DT 1010133	DTB 1110133	DT 1010121	DT 1010245	DTB 1110145
2x12	2x19	DT 1010110	DT 1010134	DTB 1110134	DT 1010122	DT 1010246	DTB 1110146
2x15	2x24	DT 1010111	DT 1010135	DTB 1110135	DT 1010123	DT 1010247	DTB 1110147

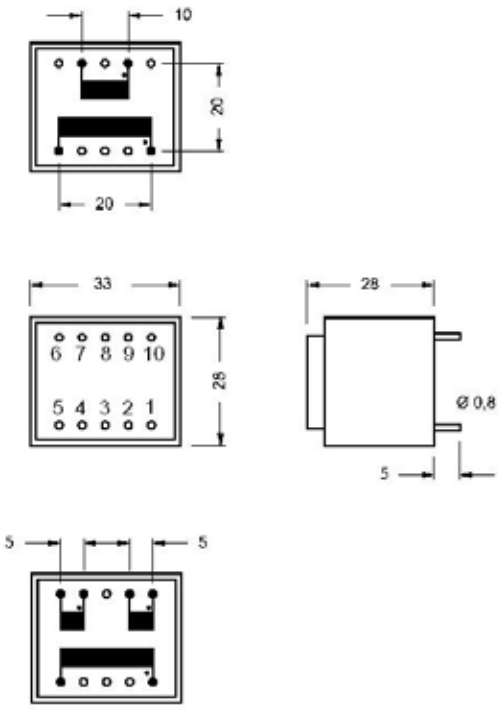

DANTRAFO Group
DANTRAFO A/S, Transformator-Teknik, Dantrafo Electronics Suzhou

EI 30/18 Standard series

		230V	230V	230V	115V	115V	115V
Sec-ondary voltage	No load voltage	CCA Ta 40/B 2,8VA	CCA Ta 70/B 2,3VA	UL Ta 70/B 2,8VA	CCA Ta 40/B 2,8VA	CCA Ta 70/B 2,3VA	UL Ta 70/B 2,8VA
6	9	DT 1010150	DT 1010174	DTB 1110174	DT 1010162	DT 1010186	DTB 1110186
9	14	DT 1010151	DT 1010175	DTB 1110175	DT 1010163	DT 1010187	DTB 1110187
12	19	DT 1010152	DT 1010176	DTB 1110176	DT 1010164	DT 1010188	DTB 1110188
15	24	DT 1010153	DT 1010177	DTB 1110177	DT 1010165	DT 1010189	DTB 1110189
18	29	DT 1010154	DT 1010178	DTB 1110178	DT 1010166	DT 1010190	DTB 1110190
21	34	DT 1010155	DT 1010179	DTB 1110179	DT 1010167	DT 1010191	DTB 1110191
24	39	DT 1010156	DT 1010180	DTB 1110180	DT 1010168	DT 1010192	DTB 1110192
2x4,5	2x7	DT 1010157	DT 1010181	DTB 1110181	DT 1010169	DT 1010193	DTB 1110193
2x6	2x9	DT 1010158	DT 1010182	DTB 1110182	DT 1010170	DT 1010194	DTB 1110194
2x9	2x14	DT 1010159	DT 1010183	DTB 1110183	DT 1010171	DT 1010195	DTB 1110195
2x12	2x19	DT 1010160	DT 1010184	DTB 1110184	DT 1010172	DT 1010196	DTB 1110196
2x15	2x24	DT 1010161	DT 1010185	DTB 1110185	DT 1010173	DT 1010197	DTB 1110197

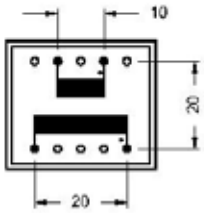

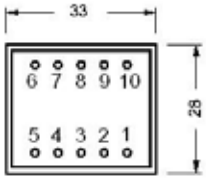

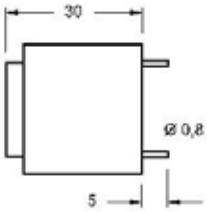

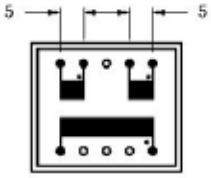

EI 38/13,6 Standard series

		230V	230V	230V	115V	115V	115V
Sec-ondary voltage	No load voltage	CCA Ta 40/B 3,0VA	CCA Ta 70/B 2,5VA	UL Ta 70/B 4,5VA	CCA Ta 40/B 2,8VA	CCA Ta 70/B 2,5VA	UL Ta 70/B 4,5VA
6	9	DT 1020000	DT 1020024	DTB 1120024	DT 1020012	DT 1020036	DTB 1120036
9	14	DT 1020001	DT 1020025	DTB 1120025	DT 1020013	DT 1020037	DTB 1120037
12	19	DT 1020002	DT 1020026	DTB 1120026	DT 1020014	DT 1020038	DTB 1120038
15	24	DT 1020003	DT 1020027	DTB 1120027	DT 1020015	DT 1020039	DTB 1120039
18	29	DT 1020004	DT 1020028	DTB 1120028	DT 1020016	DT 1020040	DTB 1120040
21	34	DT 1020005	DT 1020029	DTB 1120029	DT 1020017	DT 1020041	DTB 1120041
24	39	DT 1020006	DT 1020030	DTB 1120030	DT 1020018	DT 1020042	DTB 1120042
2x4,5	2x7	DT 1020007	DT 1020031	DTB 1120031	DT 1020019	DT 1020043	DTB 1120043
2x6	2x9	DT 1020008	DT 1020032	DTB 1120032	DT 1020020	DT 1020044	DTB 1120044
2x9	2x14	DT 1020009	DT 1020033	DTB 1120033	DT 1020021	DT 1020045	DTB 1120045
2x12	2x19	DT 1020010	DT 1020034	DTB 1120034	DT 1020022	DT 1020046	DTB 1120046
2x15	2x24	DT 1020011	DT 1020035	DTB 1120035	DT 1020023	DT 1020047	DTB 1120047

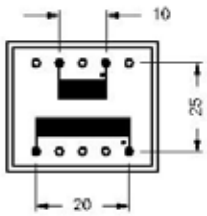

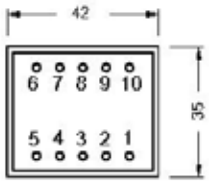

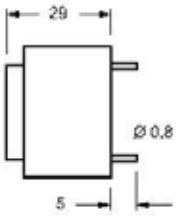

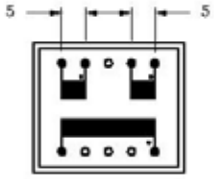

EI 42/14,8 Standard series

		230V	230V	230V	115V	115V	115V
Sec-ondary voltage	No load voltage	CCA Ta 40/B 6,0VA	CCA Ta 70/B 4,8VA	UL Ta 70/B 6,0VA	CCA Ta 40/B 6,0VA	CCA Ta 70/B 4,8VA	UL Ta 70/B 6,0VA
6	9	DT 1030050	DT 1030074	DTB 1130074	DT 1030062	DT 1030086	DTB 1130086
9	14	DT 1030051	DT 1030075	DTB 1130075	DT 1030063	DT 1030087	DTB 1130087
12	19	DT 1030052	DT 1030076	DTB 1130076	DT 1030064	DT 1030088	DTB 1130088
15	24	DT 1030053	DT 1030077	DTB 1130077	DT 1030065	DT 1030089	DTB 1130089
18	29	DT 1030054	DT 1030078	DTB 1130078	DT 1030066	DT 1030090	DTB 1130090
21	34	DT 1030055	DT 1030079	DTB 1130079	DT 1030067	DT 1030091	DTB 1130091
24	39	DT 1030056	DT 1030080	DTB 1130080	DT 1030068	DT 1030092	DTB 1130092
2x4,5	2x7	DT 1030057	DT 1030081	DTB 1130081	DT 1030069	DT 1030093	DTB 1130093
2x6	2x9	DT 1030058	DT 1030082	DTB 1130082	DT 1030070	DT 1030094	DTB 1130094
2x9	2x14	DT 1030059	DT 1030083	DTB 1130083	DT 1030071	DT 1030095	DTB 1130095
2x12	2x19	DT 1030060	DT 1030084	DTB 1130084	DT 1030072	DT 1030096	DTB 1130096
2x15	2x24	DT 1030061	DT 1030085	DTB 1130085	DT 1030073	DT 1030097	DTB 1130097

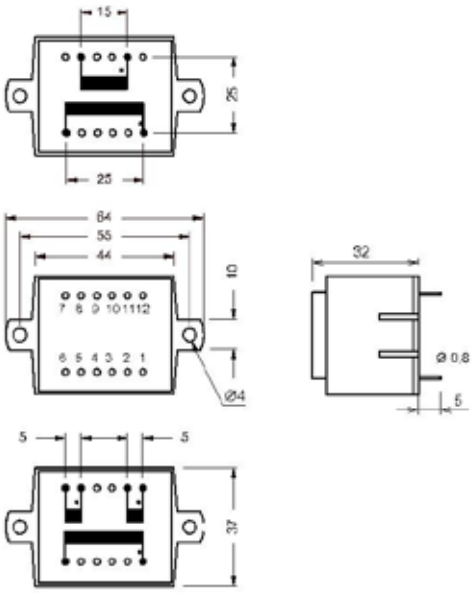

EI 48/16,8 Standard series

		230V	230V	230V	115V	115V	115V
Secon-dary voltage	No load voltage	CCA Ta 40/B 8,5VA	CCA Ta 70/B 7,0VA	UL Ta 70/B 10VA	CCA Ta 40/B 8,5VA	CCA Ta 70/B 10VA	UL Ta 70/B 10VA
6	9	DT 1040000	DT 1040024	DTB 1140024	DT 1040012	DT 1040036	DTB 1140036
9	14	DT 1040001	DT 1040025	DTB 1140025	DT 1040013	DT 1040037	DTB 1140037
12	19	DT 1040002	DT 1040026	DTB 1140026	DT 1040014	DT 1040038	DTB 1140038
15	24	DT 1040003	DT 1040027	DTB 1140027	DT 1040015	DT 1040039	DTB 1140039
18	29	DT 1040004	DT 1040028	DTB 1140028	DT 1040016	DT 1040040	DTB 1140040
21	34	DT 1040005	DT 1040029	DTB 1140029	DT 1040017	DT 1040041	DTB 1140041
24	39	DT 1040006	DT 1040030	DTB 1140030	DT 1040018	DT 1040042	DTB 1140042
2X4,5	2x7	DT 1040007	DT 1040031	DTB 1140031	DT 1040019	DT 1040043	DTB 1140043
2x6	2x9	DT 1040008	DT 1040032	DTB 1140032	DT 1040020	DT 1040044	DTB 1140044
2x9	2x14	DT 1040009	DT 1040033	DTB 1140033	DT 1040021	DT 1040045	DTB 1140045
2x12	2x19	DT 1040010	DT 1040034	DTB 1140034	DT 1040022	DT 1040046	DTB 1140046
2x15	2x24	DT 1040011	DT 1040035	DTB 1140035	DT 1040023	DT 1040047	DTB 1140047

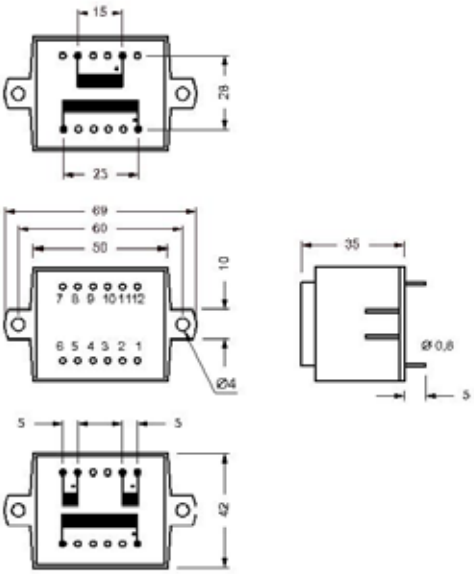

DANTRAFO Group
DANTRAFO A/S, Transformator-Teknik, Dantrafo Electronics Suzhou

EI 48/20,5 Standard series

		230V	230V	230V	115V	115V	115V
Sec-ondary voltage	No load voltage	CCA Ta 40/B 12,0VA	CCA Ta 70/B 9,8VA	UL Ta 70/B 13,0VA	CCA Ta 40/B 12,0VA	CCA Ta 70/B 9,8VA	UL Ta 70/B 13,0VA
6	9	DT 1040050	DT 1040074	DTB 1140074	DT 1040062	DT 1040086	DTB 1140086
9	14	DT 1040051	DT 1040075	DTB 1140075	DT 1040063	DT 1040087	DTB 1140087
12	19	DT 1040052	DT 1040076	DTB 1140076	DT 1040064	DT 1040088	DTB 1140088
15	24	DT 1040053	DT 1040077	DTB 1140077	DT 1040065	DT 1040089	DTB 1140089
18	29	DT 1040054	DT 1040078	DTB 1140078	DT 1040066	DT 1040090	DTB 1140090
21	34	DT 1040055	DT 1040079	DTB 1140079	DT 1040067	DT 1040091	DTB 1140091
24	39	DT 1040056	DT 1040080	DTB 1140080	DT 1040068	DT 1040092	DTB 1140092
2x4,5	2x7	DT 1040057	DT 1040081	DTB 1140081	DT 1040069	DT 1040093	DTB 1140093
2x6	2x9	DT 1040058	DT 1040082	DTB 1140082	DT 1040070	DT 1040094	DTB 1140094
2x9	2x14	DT 1040059	DT 1040083	DTB 1140083	DT 1040071	DT 1040095	DTB 1140095
2x12	2x19	DT 1040060	DT 1040084	DTB 1140084	DT 1040072	DT 1040096	DTB 1140096
2x15	2x24	DT 1040061	DT 1040085	DTB 1140085	DT 1040073	DT 1040097	DTB 1140097

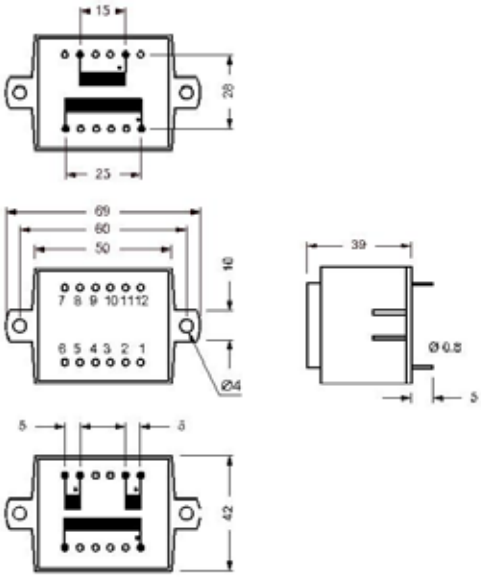

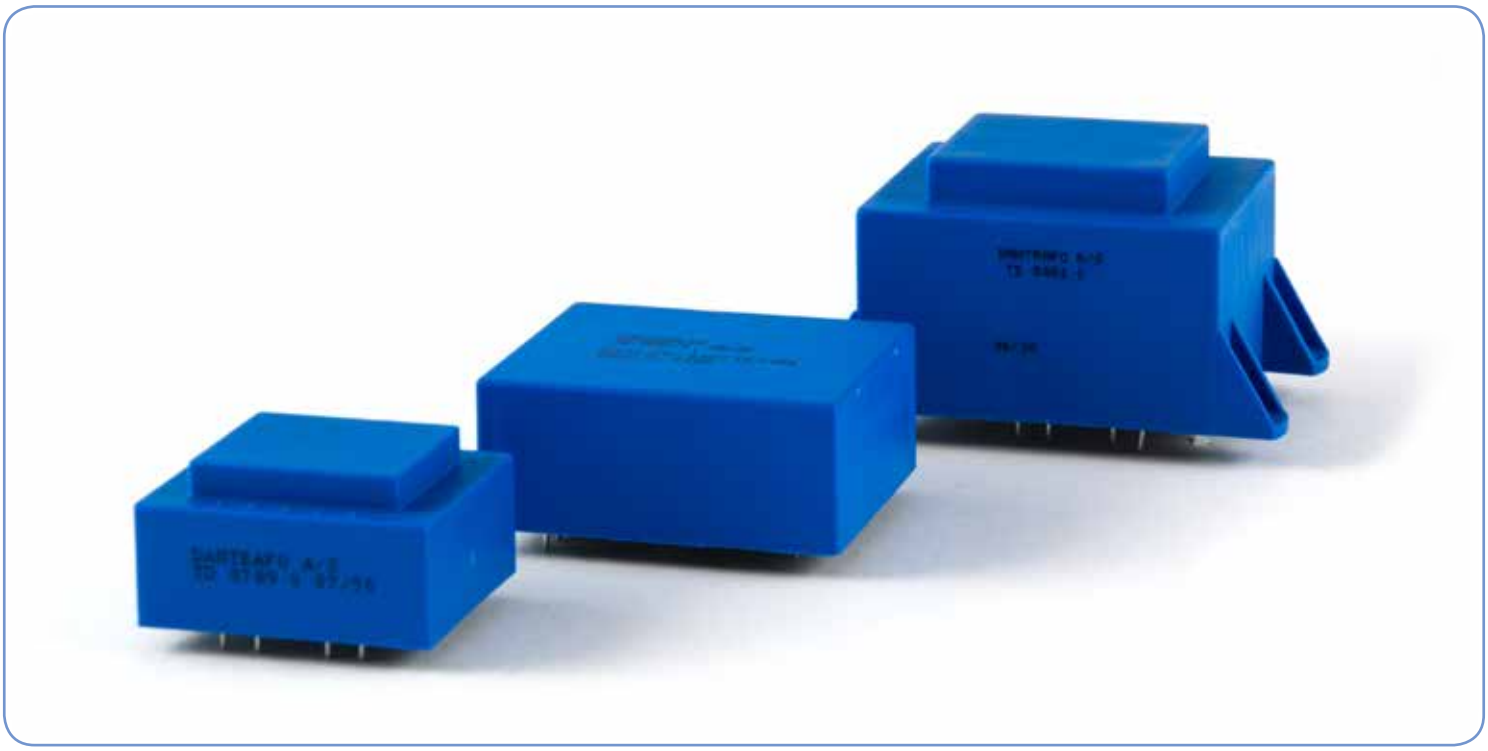

Encapsulated Low Profile PCB Transformer

General information

Encapsulated transformers are widely used in electronic applications where a cost effective low voltage source is needed. The DANTRAFO Group is well known as a manufacture of encapsulated PCB transformer in high quality. All products are vacuum encapsulated to secure maximum reliability. The Low Profile PCB transformers are based on UI technology with a dual bobbin. This ensure a compact and efficient design.

Standard program

In the standard program for low profile PCB transformers both CCA series and UL series are available, Primary voltage are 2x115, Secondary voltage from 2x4,5 - 4x7,5V, Frequency at 50-60Hz, Isolation class available are: Ta40/B Ta70/B, IP class IP00. For other values not supported by the standard program please contact us for a customized solution.

Standard Program types

UI	VA	H	m	n	$P_{L/W}$
30/5,5	2,5 - 3,0	17	120g	66%	0,65
30/7,5	3,2 - 4,0	19	150g	66%	0,91
30/10,5	4,8 - 6,0	23	180g	70%	1,25
30/16,5	8,0 - 10,0	29	250g	75%	1,30
39/8	8,0 - 10,0	23	285g	72%	1,15
39/10,2	11,0 - 14,0	24	320g	75%	1,20
39/13,5	14,5 - 18,0	28	375g	78%	1,45
39/17	19,5 - 24,0	31	440g	80%	1,65
39/21	30,0	35	535g	81%	1,70
48/17	40,0 - 50,0	39	720g	81%	3,20

UI30/5 is inherently short-circuit proof.

How to configure

For layout and connection information, please consult homepage :
www.dantrafo.dk/wp-content/uploads/layout-info.pdf

Tecnical specifications:

Primary voltage max.	50V-400V
Secondary voltage max.	48V
Frequency	50/60Hz
Power	3VA-50VA
Insulation class	B or F
Ambient temperature	40°C
IP class	00
Standards and approvals	IEC61558-2-6
UL Recognized	UL1446/UL506

UI 30/5,5 Standard series

		2x115V	2x115V	2x115V
Secon-dary voltage	No load voltage	CCA Ta 40/B 3,0VA	CCA Ta 70/B 2,5VA	UL Ta 70/B 3,0VA
2x4,5	2x7	DT 2010000	DT 2010008	DTB 2110008
2x6	2x9	DT 2010001	DT 2010009	DTB 2110009
2x9	2x14	DT 2010002	DT 2010010	DTB 2110010
2x12	2x19	DT 2010003	DT 2010011	DTB 2110011
2x15	2x24	DT 2010004	DT 2010012	DTB 2110012
4x4,5	4x7	DT 2010005	DT 2010013	DTB 2110013
4x6	4x9	DT 2010006	DT 2010014	DTB 2110014
4x7,5	4x12	DT 2010007	DT 2010015	DTB 2110015

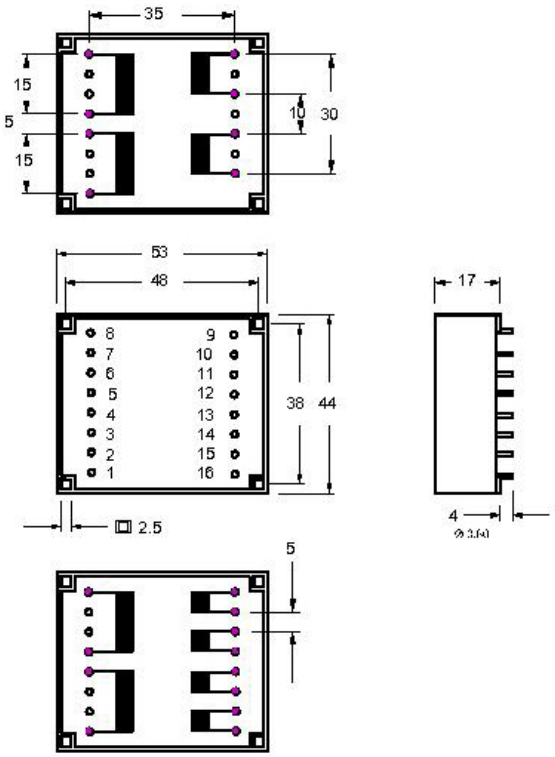

UI 30/7,5 Standard series

		2x115V	2x115V	2x115V
Secon-dary voltage	No load voltage	CCA Ta 40/B 4,0VA	CCA Ta 70/B 3,2VA	UL Ta 70/B 4,0VA
2x4,5	2x7	DT 2010020	DT 2010028	DTB 2110028
2x6	2x9	DT 2010021	DT 2010029	DTB 2110029
2x9	2x14	DT 2010022	DT 2010030	DTB 2110030
2x12	2x19	DT 2010023	DT 2010031	DTB 2110031
2x15	2x24	DT 2010024	DT 2010032	DTB 2110032
4x4,5	4x7	DT 2010025	DT 2010033	DTB 2110033
4x6	4x9	DT 2010026	DT 2010034	DTB 2110034
4x7,5	4x12	DT 2010027	DT 2010035	DTB 2110035

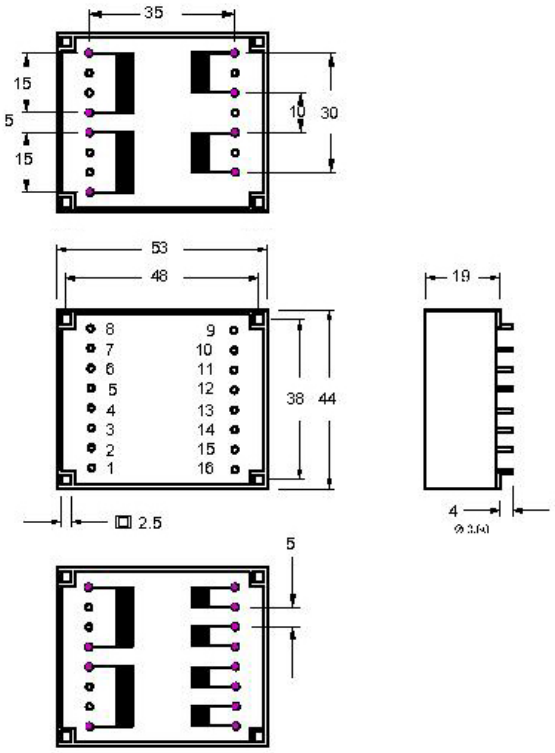

UI 30/10,5 Standard series

		2x115V	2x115V	2x115V
Secon-dary voltage	No load voltage	CCA Ta 40/B 6,0VA	CCA Ta 70/B 4,8VA	UL Ta 70/B 6,0VA
2x4,5	2x7	DT 2010040	DT 2010048	DTB 2110048
2x6	2x9	DT 2010041	DT 2010049	DTB 2110049
2x9	2x14	DT 2010042	DT 2010050	DTB 2110050
2x12	2x19	DT 2010043	DT 2010051	DTB 2110051
2x15	2x24	DT 2010044	DT 2010052	DTB 2110052
4x4,5	4x7	DT 2010045	DT 2010053	DTB 2110053
4x6	4x9	DT 2010046	DT 2010054	DTB 2110054
4x7,5	4x12	DT 2010047	DT 2010055	DTB 2110055

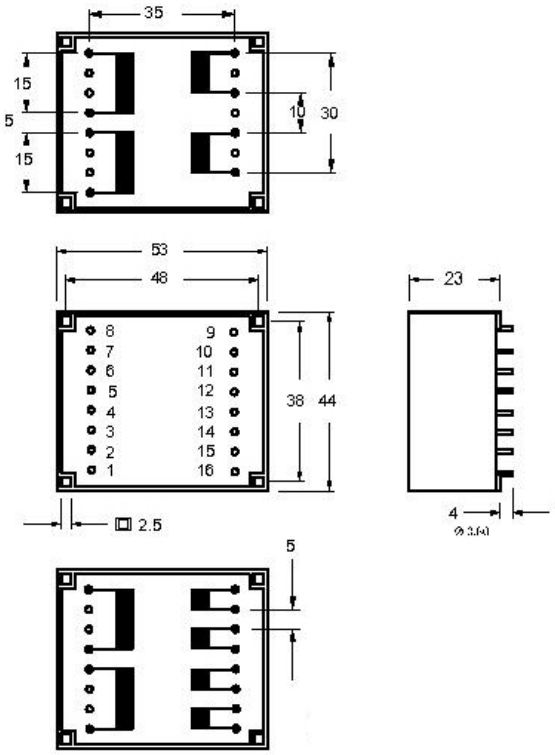

UI 30/16,5 Standard series

		2x115V	2x115V	2x115V
Secon-dary voltage	No load voltage	CCA Ta 40/B 10,0VA	CCA Ta 70/B 8,0VA	UL Ta 70/B 10,0VA
2x4,5	2x7	DT 2010060	DT 2010068	DTB 2110068
2x6	2x9	DT 2010061	DT 2010069	DTB 2110069
2x9	2x14	DT 2010062	DT 2010070	DTB 2110070
2x12	2x19	DT 2010063	DT 2010071	DTB 2110071
2x15	2x24	DT 2010064	DT 2010072	DTB 2110072
4x4,5	4x7	DT 2010065	DT 2010073	DTB 2110073
4x6	4x9	DT 2010066	DT 2010074	DTB 2110074
4x7,5	4x12	DT 2010067	DT 2010075	DTB 2110075

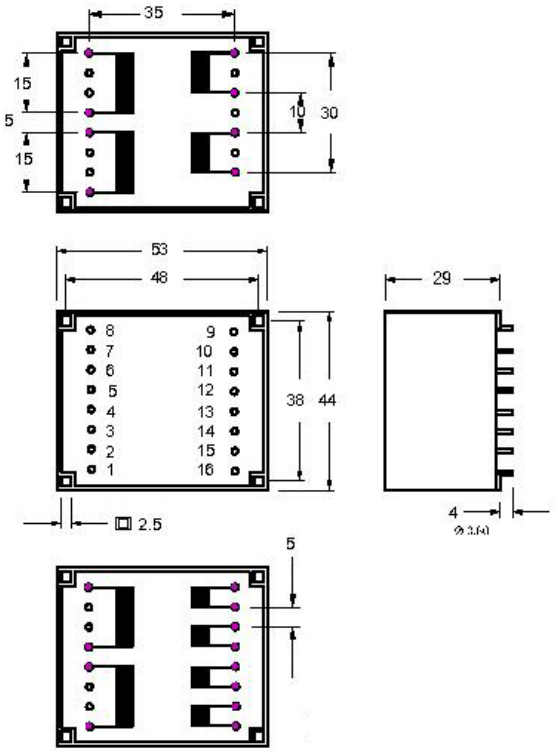

UI 39/8 Standard series

		2x115V	2x115V	2x115V
Secondary voltage	No load voltage	CCA Ta 40/B 10,0VA	CCA Ta 70/B 8,0VA	UL Ta 70/B 10,0VA
2x4,5	2x7	DT 2020020	DT 2020028	DTB 2120028
2x6	2x9	DT 2020021	DT 2020029	DTB 2120029
2x9	2x14	DT 2020022	DT 2020030	DTB 2120030
2x12	2x19	DT 2020023	DT 2020031	DTB 2120031
2x15	2x24	DT 2020024	DT 2020032	DTB 2120032
4x4,5	4x7	DT 2020025	DT 2020033	DTB 2120033
4x6	4x9	DT 2020026	DT 2020034	DTB 2120034
4x7,5	4x12	DT 2020027	DT 2020035	DTB 2120035

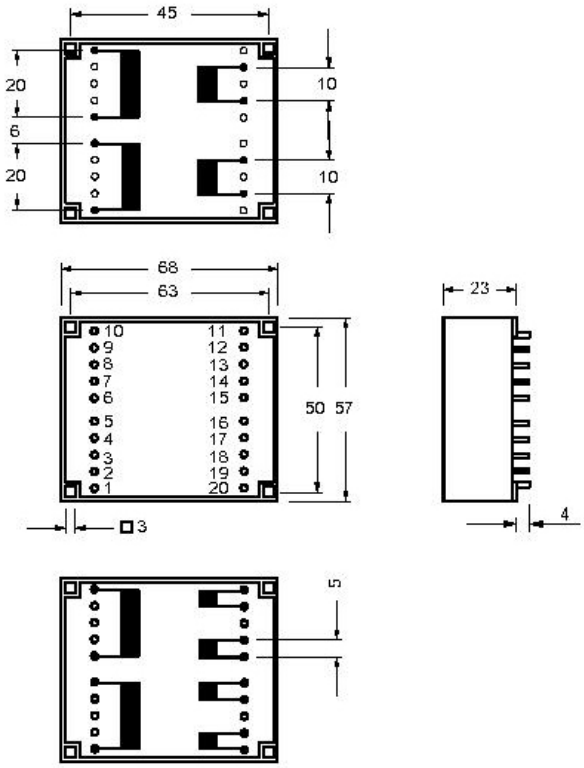

UI 39/10,2 Standard series

		2x115V	2x115V	2x115V
Secon-dary voltage	No load voltage	CCA Ta 40/B 14,0VA	CCA Ta 70/B 11,0VA	UL Ta 70/B 14,0VA
2x4,5	2x7	DT 2020040	DT 2020048	DTB 2120048
2x6	2x9	DT 2020041	DT 2020049	DTB 2120049
2x9	2x14	DT 2020042	DT 2020050	DTB 2120050
2x12	2x19	DT 2020043	DT 2020051	DTB 2120051
2x15	2x24	DT 2020044	DT 2020052	DTB 2120052
4x4,5	4x7	DT 2020045	DT 2020053	DTB 2120053
4x6	4x9	DT 2020046	DT 2020054	DTB 2120054
4x7,5	4x12	DT 2020047	DT 2020055	DTB 2120055

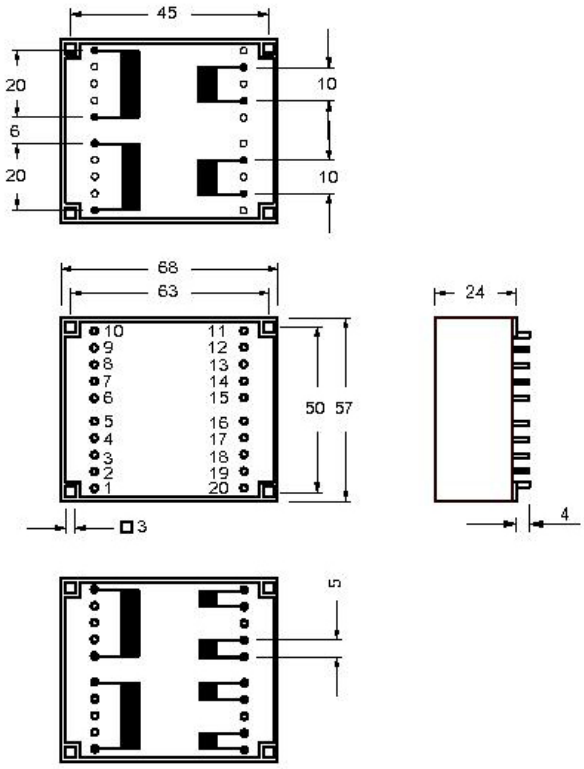

DANTRAFO Group
DANTRAFO A/S, Transformator-Teknik, Dantrafo Electronics Suzhou

UI 39/13,5 Standard series

		2x115V	2x115V	2x115V
Secondary voltage	No load voltage	CCA Ta 40/B 18,0VA	CCA Ta 70/B 14,5VA	UL Ta 70/B 18,0VA
2x4,5	2x7	DT 2020060	DT 2020068	DT 2120068
2x6	2x9	DT 2020061	DT 2020069	DT 2120069
2x9	2x14	DT 2020062	DT 2020070	DT 2120070
2x12	2x19	DT 2020063	DT 2020071	DT 2120071
2x15	2x24	DT 2020064	DT 2020072	DT 2120072
4x4,5	4x7	DT 2020065	DT 2020073	DT 2120073
4x6	4x9	DT 2020066	DT 2020074	DT 2120074
4x7,5	4x12	DT 2020067	DT 2020075	DT 2120075

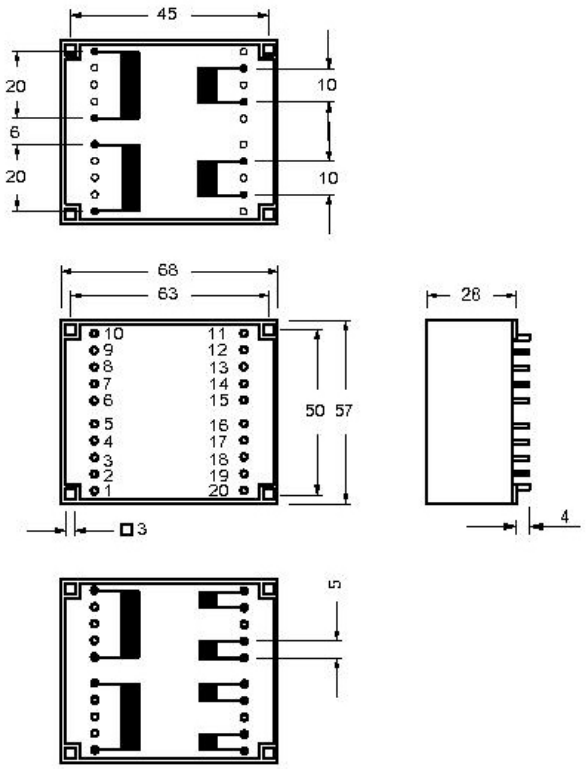

UI 39/17 Standard series

		2x115V	2x115V	2x115V
Secondary voltage	No load voltage	CCA Ta 40/B 24,0VA	CCA Ta 70/B 19,5VA	UL Ta 70/B 24,0VA
2x4,5	2x7	DT 2020080	DT 2020088	DTB 2120088
2x6	2x9	DT 2020081	DT 2020089	DTB 2120089
2x9	2x14	DT 2020082	DT 2020090	DTB 2120090
2x12	2x19	DT 2020083	DT 2020091	DTB 2120091
2x15	2x24	DT 2020084	DT 2020092	DTB 2120092
4x4,5	4x7	DT 2020085	DT 2020093	DTB 2120093
4x6	4x9	DT 2020086	DT 2020094	DTB 2120094
4x7,5	4x12	DT 2020087	DT 2020095	DTB 2120095

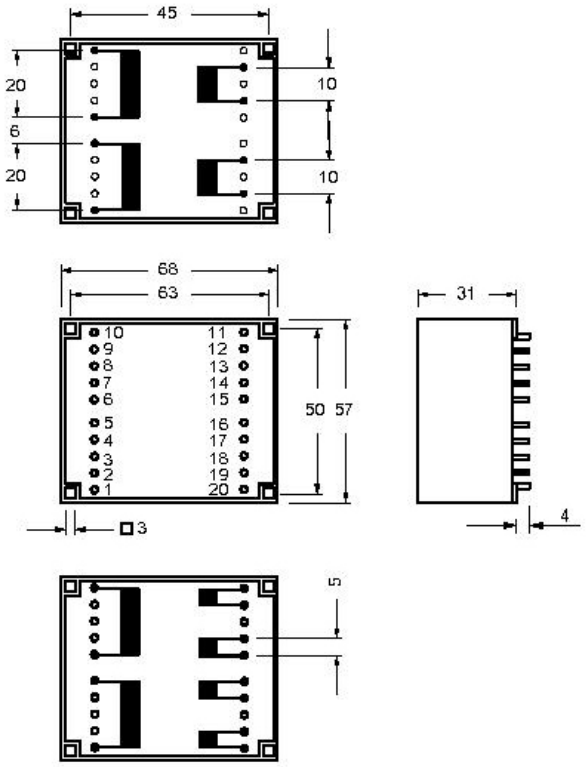

DANTRAFO Group
DANTRAFO A/S, Transformator-Teknik, Dantrafo Electronics Suzhou

UI 39/21 Standard series

		2x115V	2x115V	2x115V
Secondary voltage	No load voltage	CCA Ta 40/B 30,0VA	CCA Ta 70/B 24,0VA	UL Ta 70/B 30,0VA
2x4,5	2x7	DT 2020100	DT 2020108	DTB 2120108
2x6	2x9	DT 2020101	DT 2020109	DTB 2120109
2x9	2x14	DT 2020102	DT 2020110	DTB 2120110
2x12	2x19	DT 2020103	DT 2020111	DTB 2120111
2x15	2x24	DT 2020104	DT 2020112	DTB 2120112
4x4,5	4x7	DT 2020105	DT 2020113	DTB 2120113
4x6	4x9	DT 2020106	DT 2020114	DTB 2120114
4x7,5	4x12	DT 2020107	DT 2020115	DTB 2120115

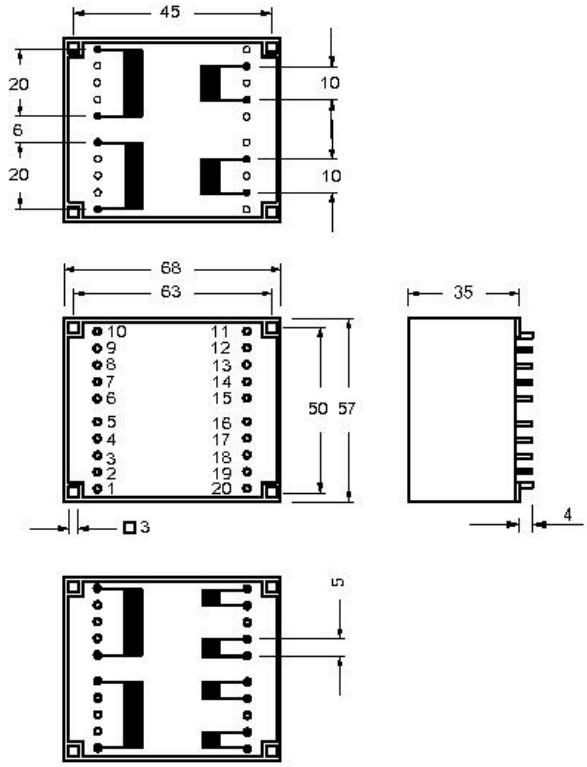

UI 48/17 Standard series

		2x115V	2x115V	2x115V
Secondary voltage	No load voltage	CCA Ta 40/B 50,0VA	CCA Ta 70/B 40,0VA	UL Ta 70/B 50,0VA
2x4,5	2x7	DT 2030000	DT 2030008	DTB 2130008
2x6	2x9	DT 2030001	DT 2030009	DTB 2130009
2x9	2x14	DT 2030002	DT 2030010	DTB 2130010
2x12	2x19	DT 2030003	DT 2030011	DTB 2130011
2x15	2x24	DT 2030004	DT 2030012	DTB 2130012
4x4,5	4x7	DT 2030005	DT 2030013	DTB 2130013
4x6	4x9	DT 2030006	DT 2030014	DTB 2130014
4x7,5	4x12	DT 2030007	DT 2030015	DTB 2130015

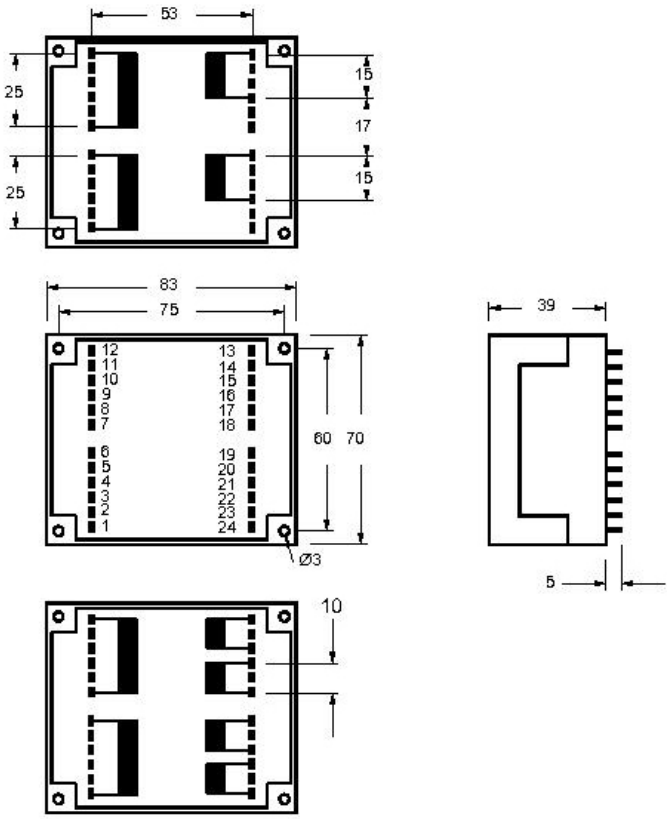

Open PCB Transformer

General information

Open PCB transformers are widely used in electronic applications where a cost effective low voltage source is needed. The DANTRAFO Group is well known as a manufacture of open PCB transformer in high quality. All products are impregnated.

This series of PCB Transformers are available upon customer request, regarding electrical specifications and individual pinning. The transformer is designed according to EN60742. Upon request we can design to other national standards.

Open Transformers Program range

VA	a	b	c	f	g	h	Weigth	Type
2,4	30	25	25				80	EI 30/15,5
2,8	30	25	30				90	EI 30/18
1,6	38	32	20				90	EI 38/7,5
3,0	38	32	27				125	EI 38/13,6
3,4	42	35	24	35	28	3	110	EI 42/8,5
6	42	35	31	35	28	3	165	EI 42/14,8
8,5	48	40	36	40	32	3	242	EI 48/16,8
12	48	40	39	40	32	3	290	EI 48/20,5
15	54	45	40	45	36	3	390	EI 54/18,8
20	60	50	45	50	40	3	550	EI 60/21
24	60	50	50	50	40	3	645	EI 60/25,5
28	60	50	54	50	40	3	720	EI 60/31
30	66	55	47	55	44	4	720	EI 66/23
40	66	55	54	55	44	4	870	EI 66/30
45	66	55	59	55	44	4	1000	EI 66/34,7
50	78	65	56	65	52	4	1150	EI 78/29,5
65	78	65	66	65	52	4	1600	EI 78/36,5
72	78	65	70	65	52	4	1800	EI 78/40,5
78	84	70	60	70	56	4	1440	EI 84/29,5
110	84	70	74	70	56	4	1880	EI 84/43,5

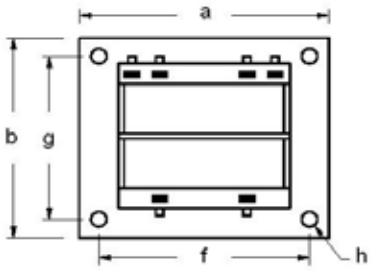

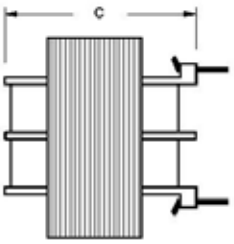

Tecnical specifications:

Primary voltage max.	1000V
Secondary voltage max.	1000V
Frequency	50/60Hz
Power	0.5VA -13VA
Insulation class	B or F
Ambient temperature	40°C
IP class	00
Standards according to	IEC 61558-2/4/6
UL Recognized	UL1446

General information

DANTRAFO Group offer a comprehensive range of control transformers which can be designed and manufactured to almost any specification and budget for all types of use.

The single phase transformers have a rated power range between 7VA and 2000VA. The transformers are manufactured according the IEC/EN 61558 Standards.

The transformers can be offered in IP class IP00 or IP20 and with optional DIN rail fixing. The transformers can be loaded to 100% of the rated power, at Ambient temperature up to 40°C.

There is a wide range of Transformers in stock and special transformers can be designed on request

The standard Series

CIT, 30VA – 2000VA
CITD, 20VA – 800VA
ENL, 7VA – 1500VA
CITM, 100VA- 1000VA
EPD, 60VA – 440VA
EPP, 24VA – 450VA
EPPD, 20VA – 110VA

Installation

For power supply in control circuits, distribution circuits, Control panels and drives.

Design

Pressure plate terminals ensure secure connections, with Screw or DIN rail fixing.
The transformers are protected against humidity and vibration. All insolation materials are UL approved

Customized Design

Can be designed with primary and secondary fuse, flat pins or primary and secondary leads out. Available on request with dual primary and secondary.

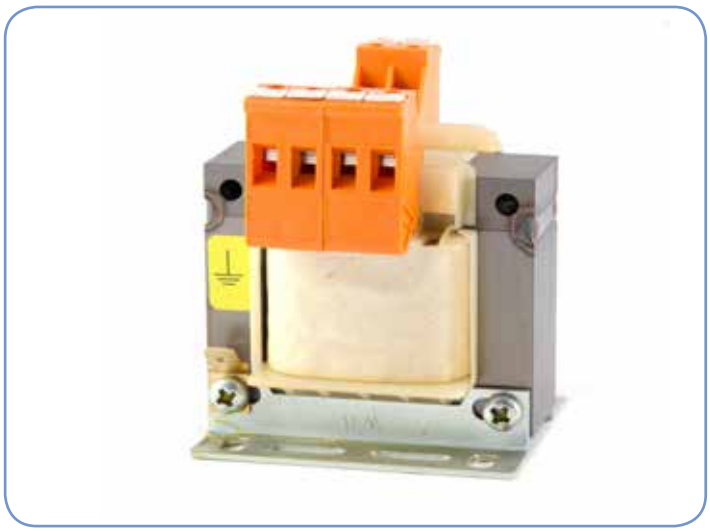

Control and Isolation Transformer, CIT series

The CIT standard series can be delivered with a DIN rail clip, the CIT series has a +-5% termination on the primary connection, to compensate for grid variations.

Item Number	Primary Voltage	Secundary Voltage	VA
DT 5066a220	P 230V	S 24V	30VA
DT 5066a320	P 400V	S 24V	30VA
DT 5066a550	P 690V	S 230V	30VA
DT 5066b220	P 230V	S 24V	50VA
DT 5066b230	P 230V	S 48V	50VA
DT 5066b250	P 230V	S 230V	50VA
DT 5066b320	P 400V	S 24V	50VA
DT 5066b350	P 400V	S 230V	50VA
DT 5066b450	P 440V	S 230V	50VA
DT 5084a220	P 230V	S 24V	80VA
DT 5084a320	P 400V	S 24V	80VA
DT 5084a350	P 400V	S 230V	80VA
DT 5084b150	P 115V	S 230V	120VA
DT 5084b220	P 230V	S 24V	120VA
DT 5084b250	P 230V	S 230V	120VA
DT 5084b320	P 400V	S 24V	120VA
DT 5084b350	P 400V	S 230V	120VA
DT 5096b220	P 230V	S 24V	160VA
DT 5096b250	P 230V	S 230V	160VA
DT 5096b320	P 400V	S 24V	160VA
DT 5096b350	P 400V	S 230V	160VA
DT 5096b550	P 690V	S 230V	160VA
DT 5096c220	P 230V	S 24V	220VA
DT 5096c250	P 230V	S 230V	220VA
DT 5096c350	P 400V	S 230V	220VA
DT 5120a150	P 115V	S 230V	330VA
DT 5120a220	P 230V	S 24V	300VA
DT 5120a350	P 400V	S 230V	300VA
DT 5120a550	P 690V	S 230V	300VA
DT 5120a702	P 230V	S 32V	300VA
DT 5120c230	P 230V	S 48V	400VA
DT 5120c250	P 230V	S 230V	400VA
DT 5120c350	P 400V	S 230V	400VA
DT 5150b150	P 115V	S 230V	700VA
DT 5150b320	P 400V	S 24V	700VA
DT 5174a150	P 115V	S 230V	1000VA
DT 5174a350	P 400V	S 230V	1000VA
DT 5174c150	P 115V	S 230V	1600VA
DT 5174d240	P 230V	S 115V	2000VA
DT 5174d250	P 230V	S 230V	2000VA
DT 5174d350	P 400V	S 230V	2000VA

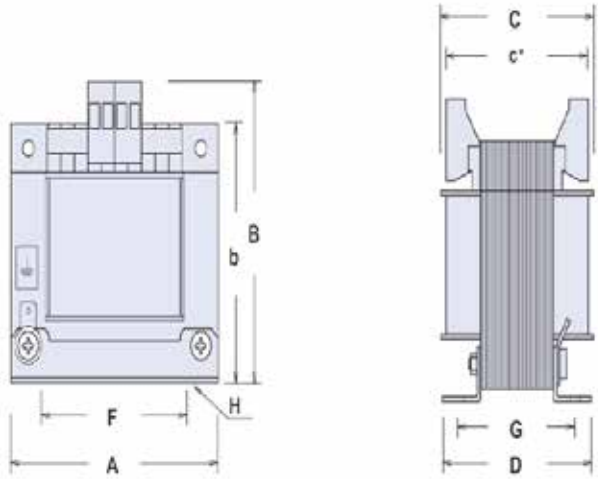

Type	VA	Eff. %	A	B	D	C	F	G	H	Weight (kg)
DT 5066a	30	80	66	80	55	66	50	42	4x9	0,8
DT 5066b	50	80	66	80	67	77	50	52	4x9	1
DT 5084a	80	84	84	93	62	72	64	46	5x9	1,5
DT 5084b	120	84	84	93	74	85	64	60	5x9	2
DT 5096b	160	88	96	104	87	90	84	69	6x11	2,8
DT 5096c	220	88	96	104	101	100	84	85	6x11	3,5
DT 5120a	300	90	120	121	86	88	90	69	6x11	4,2
DT 5120c	400	90	120	121	106	108	90	101	6x 11	6,6
DT 5150b	700	92	150	145	121	125	122	100	7x 13	10
DT 5174a	1000	94	174	163	107	118	135	87	7 x 13	12,6
DT 5174b	1200	94	174	163	117	128	135	97	7x 13	15
DT 5174c	1600	94	174	163	137	148	135	117	7x 13	20
DT 5174d	2000	94	174	163	157	168	135	137	7 x 13	24,7

Tecnical specifications CIT Series:

Primary voltage max.	690V
Secondary voltage max.	690V
Frequency	50/60Hz
Power	30VA - 2000VA
Insulation class	B
Ambient temperature	40°C
IP class	00 or optional
Standards according to	IEC61558-2-2
UL Recognized	UL1446

Control and Isolation Transformers for Control Panels, DIN and chassis mounting, CITD series

General information

This series of transformers are developed to secure power supply for Control Panels, Switchgears and Drives.
Reduce Installation time, due to combo mounting and build in fuse, see tabel below for details.
Connections: Terminal block
Mounting: Both DIN rail and screw holes.
Corrosion protection and low noise due to impregnation.
Available on request with dual primary and secondary.

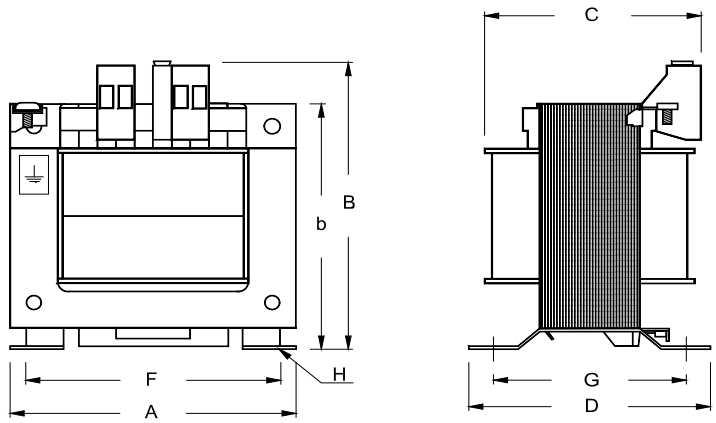

230/24V, With fuse and DIN mounting

Item Number	VA	Eff. %	A	b	B	D	C	F	G	H	Weight (kg)
DT 6060a220F	24	78	60	58	79	79	53	na	na	na	0,57
DT 6078a220F	40	72	78	74	93	71,5	64	56	56	4,75	1
DT 6078b220F	63	78	78	74	93	71,5	73	56	56	4,75	1,5
DT 6084B220F	100	83	84	79	98	85,5	82	64	64	4,75	1,9
DT 6096B220F	160	87	96	89	108	101,5	85	84	86	5,75	2,7
DT 6096C220F	250	89	96	89	108	101,5	99	84	86	5,75	3,5

230/230V, With fuse and DIN mounting

Item Number	VA	Eff. %	A	b	B	D	C	F	G	H	Weight (kg)
DT 6060a250F	24	78	60	58	79	79	53	na	na	na	0,57
DT 6078a250F	40	72	78	74	93	71,5	64	56	56	4,75	1
DT 6078b250F	63	78	78	74	93	71,5	73	56	56	4,75	1,5
DT 6084B250F	100	83	84	79	98	85,5	82	64	64	4,75	1,9
DT 6096B250F	160	87	96	89	108	101,5	85	84	86	5,75	2,7
DT 6096C250F	250	89	96	89	108	101,5	99	84	86	5,75	3,5

Other variants available:
Without fuse, with DIN mounting
110/24V, 40 VA. DT 6078a700
230/24V, 250 VA. DT 6096c220
230/280V, 63 VA. DT 6078b700
230,400/230 100VA DT 6084b701
Without fuse, without DIN mounting
230/24V, 400 VA. DT 6120c220
230/24V, 500 VA. DT 6135a220(F)
230/24V, 630VA. DT 6150b220
230/115V, 460 VA. DT 6120c700
With fuse and DIN mounting
400/24V, 100 VA. DT 6084b320F
230,400/2*24 63VA DT 6078b702F
230,400/2*24 100VA DT 6084b702F
400/230V, 63 VA. DT 6078b350F
400/230V, 250 VA. DT 6096c350F
400/230,24V, 250 VA DT 6096c700F

Tecnical specifications CITD Series:

Primary voltage max.	110-690V
Secondary voltage max.	24-280V
Frequency	50/60Hz
Power	20VA -800VA
Insulation class	B
Ambient temperature	40°C
IP class	00
Standards according to	IEC61558-2-2
	Max output 1000V
	IEC61558-2-6
	Max output 50V
UL Recognized	UL1446

Single phase Transformer ENL

ENL Series

Power	A (mm)	B (mm)	C (mm)	D * (mm)	E* (mm)	F (mm)	Weight (kg)
7VA	40	41	42	32	33	3,5	0,3
12VA	40	45	72	32	36	3,5	0,4
20VA	50	50	84	40	39	3,5	0,5
30VA	50	59	84	40	49	3,5	0,6
50VA	55	65	89	44	54	4,5	1,0
60VA	65	65	100	52	51	4,5	1,3
80VA	65	74	100	52	61	4,5	1,4
100VA	70	83	106	56	70	5,5	2,1
125VA	80	78	118	64	63	5,5	2,3
160VA	80	88	118	64	73	5,5	3,0
200VA	80	102	118	64	87	5,5	3,0
300VA	100	92	143	80	73	7,0	4,2
400VA	100	112	142	80	93	7,0	6,0
500VA	125	108	178	100	86	7,0	7,6
630VA	125	125	178	100	102	7,0	9,7
850VA	125	150	178	100	128	7,0	11,0
1000VA	150	130	212	120	103	7,0	14,0
1250VA	150	145	212	120	118	7,0	17,0
1500VA	150	160	212	120	133	7,0	20,0

*/ CC- Dimensions - For Secondary rated current above 25A, add 30mm to the C dimension

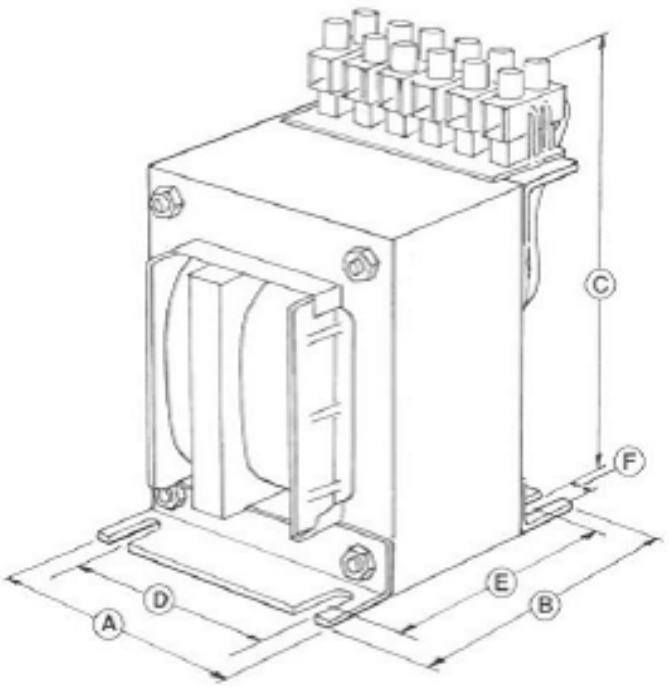

Tecnical specifications ENL Series:

Primary voltage max.	1100V
Secondary voltage max.	1000V
Frequency	50/60Hz
Power	7VA -1500VA
Insulation class	B
Ambient temperature	40°C
IP class	00
Standards according to	IEC61558-2-2
	Max input 1000V/
	Max output 1000V
	IEC61558-2-4
	Max input 1100V/
	Max output 1000V
	IEC61558-2-6
	Max input 1100V/
	Max output 50V
	Can be produced
	according to UL1446

Single phase Transformer ENL

Standard Program, Item Numbers

Power Ta/40	230/24V	230/110V	230/230V	400/24V	400/230V	440/230V	500/230V
7VA	ENL17503	ENL18872	ENL19697	ENL18125	ENL17522	ENL17560	ENL17541
12VA	ENL17504	ENL18873	ENL19698	ENL18126	ENL17523	ENL17561	ENL17542
20VA	ENL17505	ENL18874	ENL19699	ENL18127	ENL17524	ENL17562	ENL17543
30VA	ENL17506	ENL18875	ENL19700	ENL18128	ENL17525	ENL17563	ENL17544
50VA	ENL17507	ENL18876	ENL19666	ENL18129	ENL17526	ENL17564	ENL17545
60VA	ENL17508	ENL18877	ENL18078	ENL18130	ENL17527	ENL17565	ENL17546
80VA	ENL17509	ENL18878	ENL19701	ENL18131	ENL17528	ENL17566	ENL17547
100VA	ENL17510	ENL18879	ENL19460	ENL18132	ENL17529	ENL17567	ENL17548
125VA	ENL17511	ENL18880	ENL19133	ENL18133	ENL17530	ENL17568	ENL17549
160VA	ENL17512	ENL18881	ENL19702	ENL18134	ENL17531	ENL17569	ENL17550
200VA	ENL17513	ENL18882	ENL19703	ENL18135	ENL17532	ENL17570	ENL17551
300VA	ENL17514	ENL18883	ENL19704	ENL18136	ENL17533	ENL17571	ENL17552
400VA	ENL17515	ENL18884	ENL18681	ENL18137	ENL17534	ENL17572	ENL17553
500VA	ENL17516	ENL18885	ENL18241	ENL18138	ENL17535	ENL17573	ENL17554
630VA	ENL17517	ENL18886	ENL18186	ENL18139	ENL17536	ENL17574	ENL17555
850VA	ENL17518	ENL18887	ENL19535	ENL18140	ENL17537	ENL17575	ENL17556
1000VA	ENL17519	ENL18888	ENL19537	ENL18141	ENL17538	ENL17576	ENL17557
1250VA	ENL17520	ENL18889	ENL19580	ENL18142	ENL17539	ENL17577	ENL17558
1500VA	ENL17521	ENL18890	ENL19492	ENL18143	ENL17540	ENL17578	ENL17559

Universal Control and Isolation Transformers for Control Panels, Multi Voltages, CITM series

General information

This series of transformers are developed to secure power supply for Control Panels, Switchgears and Drives.

18 Different combinations of input voltages are available on the same transformer, 95-710V.

Primary :115,230,400,460,520,690 +- 20V

Secondary 230V

Alternative secondary voltages are availalble on request

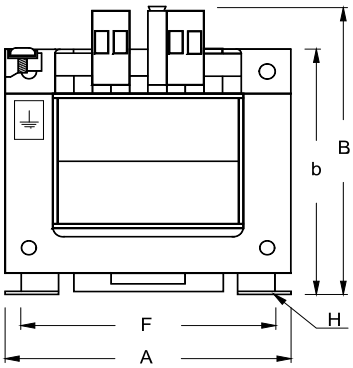

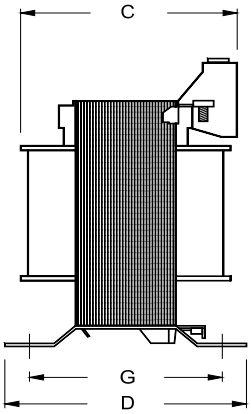

Item Number	VA	A	B	D	C	F	G	H	Weight(kg)
DT 6084b800	100	84	98	86	82	64	64	4,75	1,9
DT 6096c800	200	96	108	102	99	84	86	5,75	3,5
DT 6120c800	400	120	126	124	143	106	90	5,75	6,5
DT 6150b800	630	150	147	130	125	122	107	6,75	9,5
DT 6174b800	1000	174	167	127	228	135	101	6,75	12,5

Tecnical specifications CITM Series:

Primary voltage max.	110-690V
Secondary voltage max.	230V
Frequency	50/60Hz
Power	100 -1000VA
Insulation class	B
Ambient temperature	40°C
IP class	00
Standards according to	IEC61558-2-2
	Max output 1000V
	IEC61558-2-6
	Max output 50V
UL Recognized	UL1446

Single phase Encapsulated DIN Transformer EPD

Control, safety and isolating single-phase transformers with IP20 protection index. For supply of high instantaneous power necessary for correct operation of contactors , switches and control equipments. The EPD is designed for DIN- Rail and screw mounting.
All transformers/autotransformers can be manufactured with desired voltage range in small or serial volumes on request.

Power	Primary: 230V, Secondary 24V		Primary: 400/440, Secondary 230V					Dimensions mm			
VA	Item number	E-number	Item number	E-number	A	B	C	D	E	Hole	Veight kg
60	DT 22664-1	520 20 01	DT 22672-1	520 20 19	90	106	96	68,5	90	4,5	1,4
80	DT 22665-1	520 20 03	DT 22673-1	520 20 21	90	106	96	68,5	90	4,5	1,5
110	DT 22666-1	520 20 04	DT 22674-1	520 20 22	90	106	116	68,5	90	4,5	2,3
150	DT 22667-1	520 20 09	DT 22675-1	520 20 23	90	106	116	68,5	90	4,5	2,4
220	DT 22668-1	520 20 14	DT 22676-1	520 20 24	126	136	114	96	121	5,5	3,9
275	DT 22669-1	520 20 16	DT 22677-1	520 20 25	126	136	114	96	121	5,5	4,1
360	DT 22670-1	520 20 17	DT 22678-1	520 20 26	126	136	124	96	121	5,5	4,8
440	DT 22671-1	520 20 18	DT 22679-1	520 20 27	126	136	124	96	121	5,5	4,9

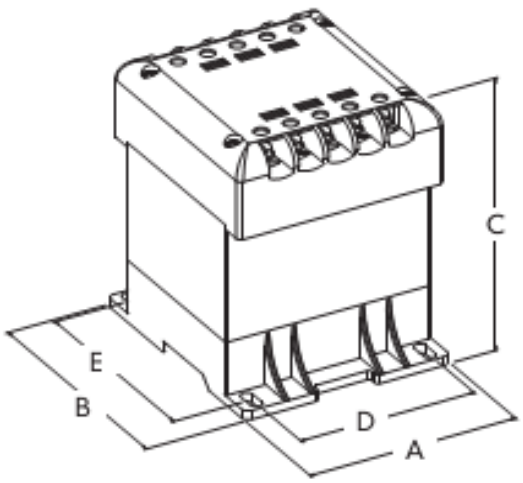

Tecnical specifications EPPD Series:

Primary voltage max.	1100V
Secondary voltage max.	1000V
Frequency	50/60Hz
Power	60VA - 440VA
Isolation class	II
Insulation class	B
Ambient temperature	40°C
IP class	20
Standards according to	IEC 61558-2-2
	IEC 61558-2-4
	IEC 61558-2-6

Can be manufactured with UL1446 insulation system

DANTRAFO Group
DANTRAFO A/S, Transformator-Teknik, Dantrafo Electronics Suzhou

Single phase Encapsulated Transformer EPP

EPP Series

Power	A (mm)	B (mm)	C* (mm)	Weight (kg)
24VA	54	48	88	0,6
36VA	54	58	88	0,8
50VA	59	61	94	1,1
60VA	72	59	113	1,2
80VA	75	64	120	1,5
110VA	75	78	120	2,0
130VA	85	75	133	2,2
160VA	85	85	133	2,8
200VA	85	99	133	3,5
330VA	107	109	172	5,3
450VA	107	129	172	6,8

*/ C dimension is only for the box. Add 15mm for the connector,
Add 25mm for secondary rated current above 16A.

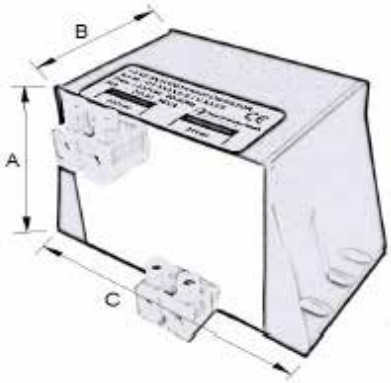

Standard Program, 230V Primary Voltage

Item Number	Secondary Voltage	Power Ta/40
DT 21643-1	24V	24VA
DT 21644-1	24V	36VA
DT 21645-1	24V	50VA
DT 21646-1	24V	60VA
DT 21647-1	24V	80VA
DT 21648-1	24V	110VA
DT 21649-1	24V	130VA
DT 21650-1	24V	160VA
DT 21651-1	24V	200VA
DT 21652-1	24V	330VA
DT 21653-1	24V	450VA

Standard Program, 400V and 440V Primary Voltage

Item Number	Secondary Voltage	Power Ta/40
DT 21654-1	230V	24VA
DT 21655-1	230V	36VA
DT 21656-1	230V	50VA
DT 21657-1	230V	60VA
DT 21658-1	230V	80VA
DT 21659-1	230V	110VA
DT 21660-1	230V	130VA
DT 21661-1	230V	160VA
DT 21662-1	230V	200VA
DT 21663-1	230V	330VA
DT 21664-1	230V	450VA

Tecnical specifications EPP Series:

Primary voltage max.	1100V
Secondary voltage max.	1000V
Frequency	50/60Hz
Power	24VA - 450VA
Insulation class	B
Ambient temperature	40°C
IP class	21
Standards according to	IEC61558-2-2 Max input 1000V/ Max output 1000V IEC61558-2-4 Max input 1100V/ Max output 1000V IEC61558-2-6 Max input 1100V/ Max output 50V Can be produced according to UL1446

DANTRAFO Group
DANTRAFO A/S, Transformator-Teknik, Dantrafo Electronics Suzhou

Single phase Encapsulated DIN Transformer EPPD

EPPD Series

Power	A (mm)	B (mm)	C* (mm)	Weight (kg)
20VA	50	60	61	0,5
36VA	58	66	67	0,8
50VA	65	72	73	1,1
60VA	65	72	73	1,1
90VA	74	85	78	1,6
110VA	74	85	78	1,6
130VA	85	75	133	2,2
160VA	85	85	133	2,8
200VA	85	99	133	3,5
330VA	107	109	172	5,3
450VA	107	129	172	6,8

*/ C dimension is only for the box. Add 15mm for the connector,
Add 25mm for secondary rated current above 16A.

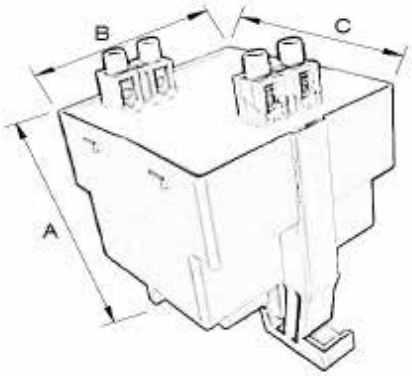

Standard Program, 230V Primary Voltage

Item Number	Secondary Voltage	Power Ta/40
DT 21630-1	24V	20VA
DT 21631-1	24V	36VA
DT 21632-1	24V	50VA
DT 21633-1	24V	60VA
DT 21634-1	24V	90VA
DT 21635-1	24V	110VA

Standard Program, 400V and 440V Primary Voltage

Item Number	Secondary Voltage	Power Ta/40
DT 21637-1	230V	24VA
DT 21638-1	230V	36VA
DT 21639-1	230V	50VA
DT 21640-1	230V	60VA
DT 21641-1	230V	80VA
DT 21642-1	230V	110VA

Tecnical specifications EPPD Series:

Primary voltage max.	1100V
Secondary voltage max.	1000V
Frequency	50/60Hz
Power	20-110VA
Insulation class	B
Ambient temperature	40°C
IP class	21
Standards according to	IEC61558-2-2 Max input 1000V/ Max output 1000V IEC61558-2-4 Max input 1100V/ Max output 1000V IEC61558-2-6 Max input 1100V/ Max output 50V Can be produced according to UL1446

Single Phase UI Transformer

General information

DANTRAFO Group offer a comprehensive range of UI control transformers which can be designed and manufactured according to almost any specification. The UI Transformer is well suited for single phase high power solutions, and driving contactors, other switch and control gear.

The single-phase transformers have a rated power range between 2KVA and 20KVA.

The transformers are manufactured according the IEC/ EN 61558 Standards. There are different models of transformers depending of the protection index which can be IP00, IP21 or IP54. The transformers can be loaded to 100% of the rated power, at Ambient temperature. up to 40C.

Special transformers can be designed on request.

The standard Series

EO, 2KVA – 20KVA
EPK, 2KVA – 20KVA (IP21)
ESP, 2KVA – 20KVA (IP54)

Installation

For power supply in control circuits, distribution circuits, Control panels and drives.

Design

Pressure plate terminals ensure secure connections, with Screw fixing. Horizontal or vertical mounting are available.

The transformers are protected against humidity and vibration. All insulation materials are UL approved.

Customized Design

Single Phase UI Transformers can be designed with primary and secondary fuse, primary and secondary leads out and dual primary and secondary.

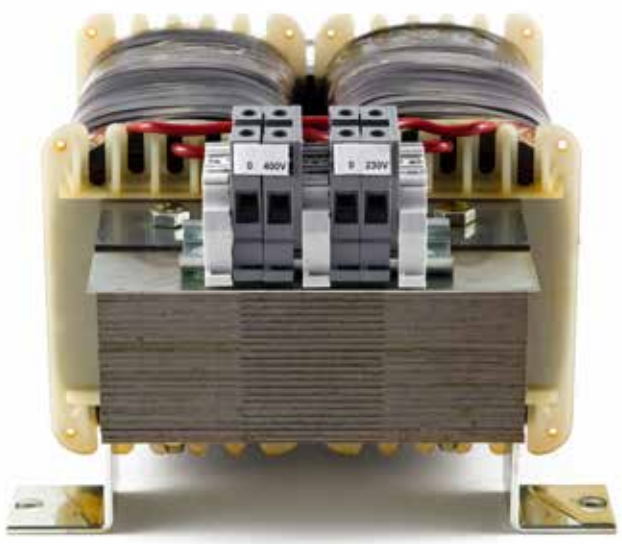

Tecnical specifications:

Primary voltage max.	1100V
Secondary voltage max.	1000V
Frequency	50/60Hz
Power	2000VA - 25000VA
Insulation class	B or F
Ambient temperature	40°C
IP class	00 or optional
Standards according to	IEC61558-2-2 Max input 1000V/ Max output 1000V EN61558-2-4 Max input 1100V/ Max output 1000V EN61558-2-6 Max input 1100V/ Max output 50V Can be produced according to UL1446

Single phase Transformer EO

Power	Dimensions according to fig.	A (mm)	B (mm)	C (mm)	D* (mm)	E* (mm)	Weight (kg)
2000VA	1	184	220	140	158	176	18
3000VA	1	232	250	160	206	200	27
4000VA	1	232	250	160	206	200	27
5000VA	1	250	280	180	217	224	40
6000VA	2	240	173	370	210	139	45
7500VA	2	280	153	390	240	119	60
10000VA	2	280	183	420	240	149	75
15000VA	2	280	213	420	240	179	95
20000VA	2	300	213	480	260	179	140

*/ CC- Dimensions

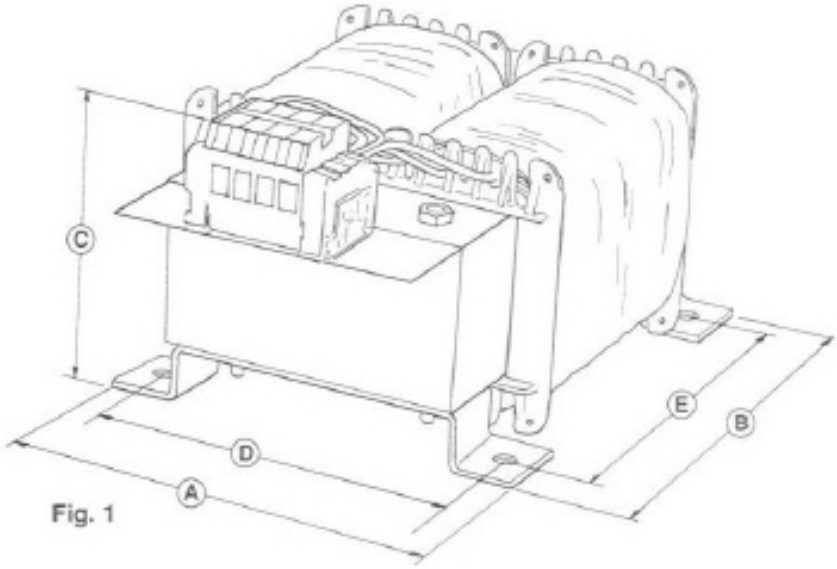

Fig. 1

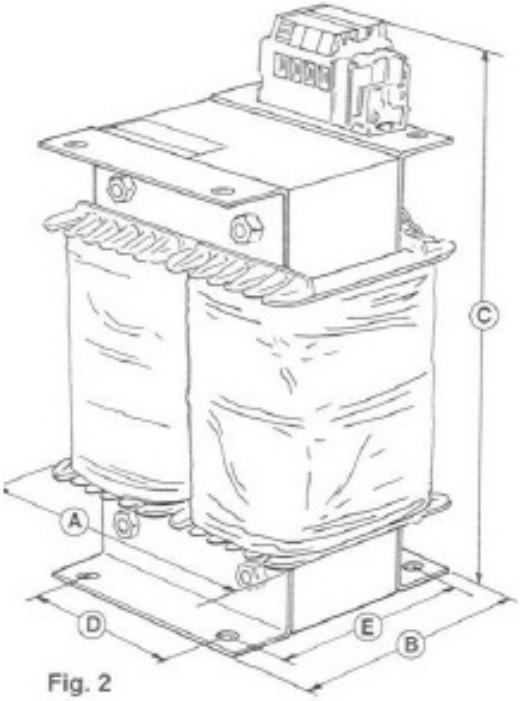

Fig. 2

Standard Program, 400V Primary Voltage

Item Number	Secondary Voltage	Power Ta/40
EO19055	230V	2000VA
EO19056	230V	3000VA
EO19057	230V	4000VA
EO19058	230V	5000VA
EO19059	230V	6000VA
EO19060	230V	7500VA
EO19061	230V	10000VA
EO19062	230V	15000VA
EO19063	230V	20000VA

Standard Program, 500V Primary Voltage

Item Number	Secondary Voltage	Power Ta/40
EO19064	230V	2000VA
EO19065	230V	3000VA
EO19066	230V	4000VA
EO19067	230V	5000VA
EO19068	230V	6000VA
EO19069	230V	7500VA
EO19070	230V	10000VA
EO19071	230V	15000VA
EO19072	230V	20000VA

Single phase Transformer EPK (IP21)

Power	Dimensions according to fig.	A (mm)	B (mm)	C (mm)	Weight (kg)
2000VA	1	230	400	165	22
3000VA	1	260	400	165	31
4000VA	1	335	450	225	45
5000VA	1	335	450	225	45
6000VA	2	380	510	458	54
7500VA	2	400	560	518	86
10000VA	2	400	560	518	106
15000VA	2	400	560	518	132
20000VA	2	400	560	518	150

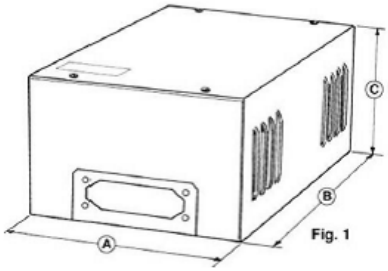

Fig. 1

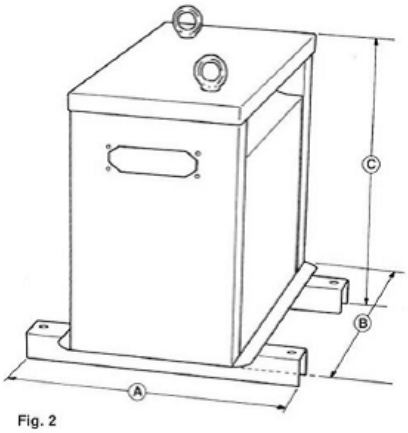

Fig. 2

Standard Program, 400V Primary Voltage

Item Number	Secondary Voltage	Power Ta/40
EPK19055	230V	2000VA
EPK19056	230V	3000VA
EPK19057	230V	4000VA
EPK19058	230V	5000VA
EPK19059	230V	6000VA
EPK19060	230V	7500VA
EPK19061	230V	10000VA
EPK19062	230V	15000VA
EPK19063	230V	20000VA

Standard Program, 500V Primary Voltage

Item Number	Secondary Voltage	Power Ta/40
EPK19064	230V	2000VA
EPK19065	230V	3000VA
EPK19066	230V	4000VA
EPK19067	230V	5000VA
EPK19068	230V	6000VA
EPK19069	230V	7500VA
EPK19070	230V	10000VA
EPK19071	230V	15000VA
EPK19072	230V	20000VA

Tecnical specifications:

Primary voltage max.	1100V
Secondary voltage max.	1000V
Frequency	50/60Hz
Power	30VA - 2000VA
Insulation class	B or F
Ambient temperature	40°C
IP class	21/54 or optional
Standards according to	IEC61558-2-2 Max input 1000V/ Max output 1000V EN61558-2-4 Max input 1100V/ Max output 1000V EN61558-2-6 Max input 1100V/ Max output 50V Can be produced according to UL1446

Single phase Transformer ESP (IP54)

Power	Dimensions according to fig.	A (mm)	B (mm)	C (mm)	Weight (kg)
2000VA	1	300	400	200	24
3000VA	1	400	500	200	38
4000VA	1	400	500	200	52
5000VA	1	400	500	200	52
6000VA	2	500	300	500	68
7500VA	2	500	300	500	100
10000VA	2	500	300	500	120
15000VA	2	600	400	600	147
20000VA	2	600	400	600	165

fig.1

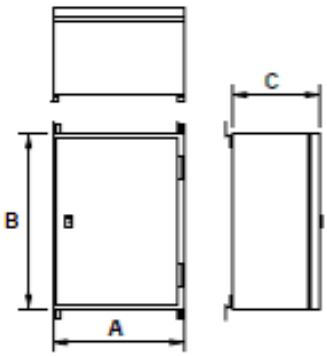

fig.2

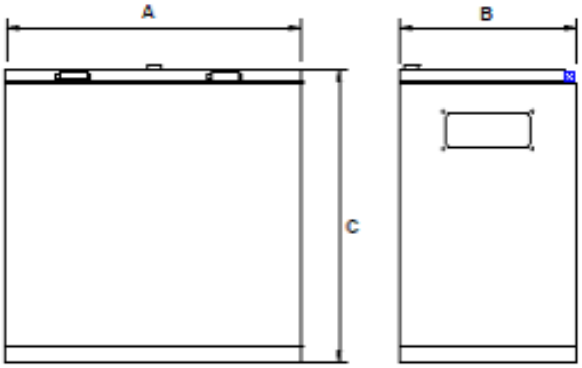

Standard Program, 400V Primary Voltage

Item Number	Secondary Voltage	Power Ta/40
ESP19055	230V	2000VA
ESP19056	230V	3000VA
ESP19057	230V	4000VA
ESP19058	230V	5000VA
ESP19059	230V	6000VA
ESP19060	230V	7500VA
ESP19061	230V	10000VA
ESP19062	230V	15000VA
ESP19063	230V	20000VA

Standard Program, 500V Primary Voltage

Item Number	Secondary Voltage	Power Ta/40
ESP19064	230V	2000VA
ESP19065	230V	3000VA
ESP19066	230V	4000VA
ESP19067	230V	5000VA
ESP19068	230V	6000VA
ESP19069	230V	7500VA
ESP19070	230V	10000VA
ESP19071	230V	15000VA
ESP19072	230V	20000VA

Tecnical specifications:

Primary voltage max.	1100V
Secondary voltage max.	1000V
Frequency	50/60Hz
Power	30VA - 2000VA
Insulation class	B or F
Ambient temperature	40°C
IP class	21/54 or optional
Standards according to	IEC61558-2-2 Max input 1000V/ Max output 1000V EN61558-2-4 Max input 1100V/ Max output 1000V EN61558-2-6 Max input 1100V/ Max output 50V Can be produced according to UL1446

Three Phase Transformer

General information

Three phase isolating transformers dry type, with standard rated power range between 100 VA and 40 kVA. Manufactured according IEC/EN 61558 Standards (safety, isolating, control or separating transformers). Intended for conversion of voltages with galvanic isolation, attenuation of line disturbances and/or when it is necessary to change the neutral system. Connection with terminal blocks or with screws for flat terminals.

There are different models of transformers depending of the protection index which can be IP00, IP23 or IP54, The transformers can be loaded to 100% of the rated power, at Ambient temperature. up to 40C. On request the transformers can be manufactured with other voltages, as Autotransformer, with taps, electrostatic screen, etc.

The standard series:

TPT/TPTAL (open) 2,5kA to 20kVA
TO (open) 100VA to40kVA
TPK (IP21) 100VA to 40kVA
TSP (IP54) 100VA to 40kVA

Customized Design

Can be designed with primary and secondary fuse, primary and secondary leads out. Available on request with dual primary and secondary. Can be designed up to 150 kVA.

Three Phase Transformers TPT Small Series

General information

The TPT small series is a Standard three phase isolating transformers ranging from 2,5kVA to 20kVA, we keep in stock for fast delivery. Using the +-5% input choice offers 380,400,420V input option or 380,400,420 output option

Item Number	kVA	Eff.	A (mm)	B (mm)	C (mm)	D	E	F	G	H	I	J	K	Weight (kg)
TPT 12115 IP00 TPT 12115 IP23 TPT 12115 IP54	2,5	94,3	260 520 520	265	215	72	102	120	132 340 340	144	220	270 420 420	11	30
TPT 12117 IP00 TPT 12117 IP23 TPT 12117 IP54	4	94,5	295 520 520	300	240	77	119	131	147 340 340	164	250	300 420 420	11	43
TPT 12118 IP00 TPT 12118 IP23 TPT 12118 IP54	5	94,7	332 520 680	340	290	92	150	154	192 340 450	182	280	330 420 560	11	57
TPT 12120 IP00 TPT 12120 IP23 TPT 12120 IP54	8	96	356 520 680	360	310	93	155	162	193 340 450	194	300	355 420 560	11	71
TPT 12122 IP00 TPT 12122 IP23 TPT 12122 IP54	12,5	96	420 680 765	420	370	103	181	200	223 450 530	228	350	405 560 620	11	108
TPT 12124 IP00 TPT 12124 IP23 TPT 12124 IP54	20	96,8	480 680 765	480	430	140	240	241	280 450 530	259	400	455 560 620	13	182

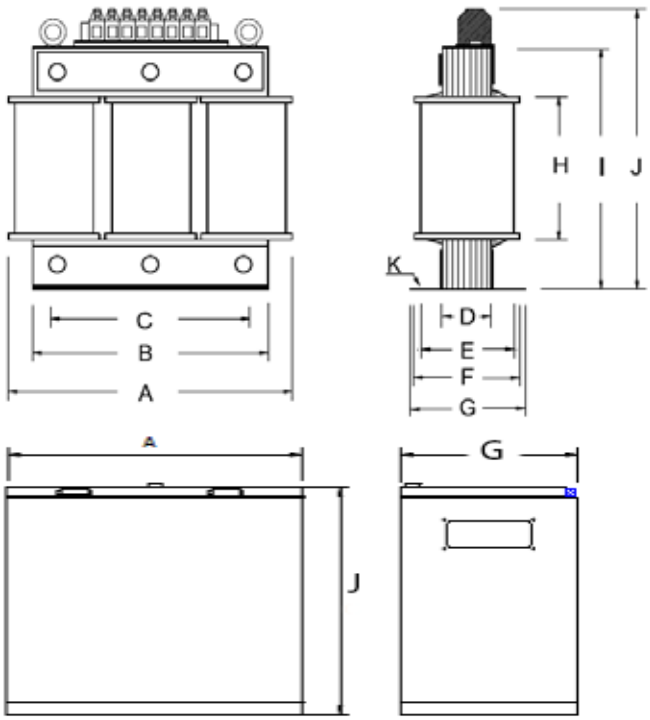

Tecnical specifications:

Primary voltage	3x400V-+5%
Secondary voltage	3x400+N
Frequency	50/60Hz
Vector Group	YyN0
Insulation class	F
Ambient temperature	40°C
IP class:	00
Standards according to	IEC61558-1
UL Recognized	UL1446 (UL506, IP00)

Three Phase Transformers TPT Large Series

General information

The TPT Large series is a Standard three phase isolating transformers ranging from 40 - 100kVA. Can optionaly be built in any vector group, and with optional in and output voltages.
Fitted with crane hooks at the upper side.
Can be fitted with optional cabinet

Item Number	kVA	Eff.	A (mm)	B (mm)	C (mm)	D	E	F	G	H	I	J	K	Weight (kg)
TPT 12127 IP00 TPT 121127A IP23	40	96,7	600 1050	500 960	540 540	100 760	185 720	235 660	280 750	230 745	500	600 742	22x16	200 258
TPT 12128 IP00 TPT 12128A IP23	50	97,2	600 1050	500 960	540 540	120 760	205 720	255 660	300 760	230 745	500	600 742	22x16	240 298
TPT 12129 IP00 TPT 12129A IP23	63	97,7	600 1050	500 960	540 540	150 760	235 720	285 660	330 760	230 745	500	600 742	22x16	300 358
TPT 12130 IP00 TPT 12130A IP23	80	98	600 1050	500 960	540 540	180 760	265 720	315 660	360 760	230 745	500	600 742	22x16	360 418
TPT 12131 IP00 TPT 12131A IP23	100	98,3	600 1050	500 960	540 540	200 760	285 720	335 660	380 760	230 745	500	600 742	22x16	430 488

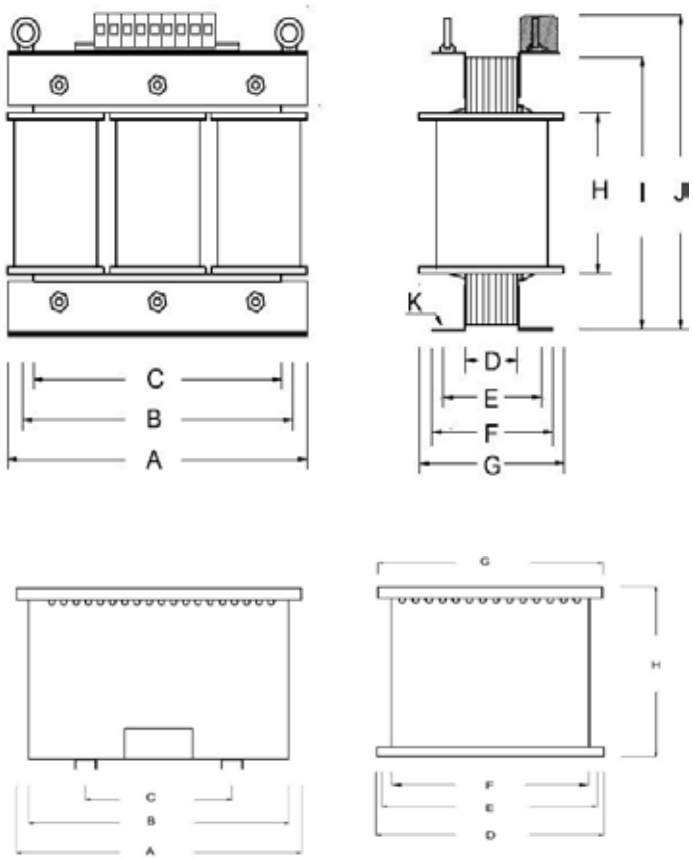

Tecnical specifications:

Primary voltage	3x400V
Secondary voltage	3x400+N
Frequency	50/60Hz
Vector Group	Dyn 11
Insulation class	F
Ambient temperature	40°C
IP class:	00
Standards according to	IEC61558-2-4

CE

DANTRAFO Group
DANTRAFO A/S, Transformator-Teknik, Dantrafo Electronics Suzhou

Three Phase Transformers TPTAL Series

General information

This Transformer type is made with Aluminum wires, This create a cost and weight effective design.
Aluminum's conductivity is about 62% that of copper when measured on a volume basis, but about twice as good measured on weight. That's why an aluminum based transformer may need more volume, but with less weight.

Item Number	kVA	Eff.	A (mm)	B (mm)	C (mm)	D	E	F	G	H	I	J	K	Weight (kg)
TPTAL 14120 IP00 TPTAL 14120 IP23 TPTAL 14120 IP54	8	94,4	356 520 680	360	310	93	155	162	193 340 450	194	300	355 420 560	11	60
TPTAL 14122 IP00 TPTAL 14122 IP23 TPTAL 14122 IP54	12,5	95,4	420 680 765	420	370	103	181	200	223 450 530	228	350	405 560 620	11	82
TPTAL 14124 IP00 TPTAL 14124 IP23 TPTAL 14124 IP54	20	95,9	480 680 765	480	430	140	240	241	280 450 530	259	400	455 560 620	13	153

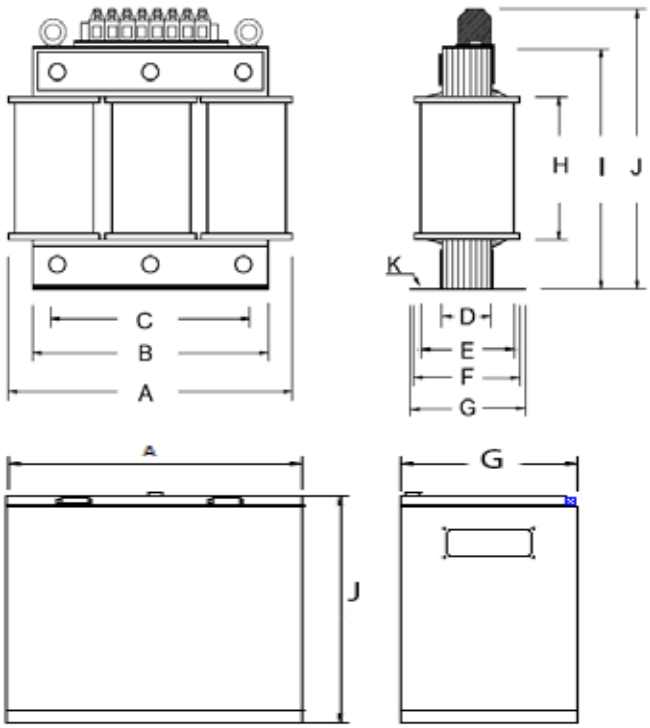

Tecnical specifications:

Primary voltage	3x400V
Secondary voltage	3x400+N
Frequency	50/60Hz
Vector Group	Dyn11
Insulation class	F or H
Ambient temperature	40°C
IP class:	00
Standards according to	IEC61558-1
UL Recognized	UL1446 (UL506, IP00)

DANTRAFO Group
DANTRAFO A/S, Transformator-Teknik, Dantrafo Electronics Suzhou

Three Phase Transformers 100VA - 40KVA, TO Series

Power	Dimensions according to fig.	A (mm)	B (mm)	C (mm)	D* (mm)	E* (mm)	Approx Weight (kg)
100VA	2	100	56	125	50	45	2,5
200VA	2	150	95	150	60	71	6,0
300VA	2	150	95	150	60	71	6,0
500VA	2	180	95	175	60	71	8,5
800VA	2	180	105	175	60	81	10,0
1000VA	1	190	280	90	152	215	14,0
1200VA	1	190	280	90	152	215	14,0
1500VA	1	190	280	114	152	215	18,0
2000VA	1	200	290	112	160	226	20,0
3000VA	1	220	310	126	176	256	30,0
4500VA	1	250	385	144	200	306	41,0
6000VA	1	280	415	163	224	329	63,0
8000VA	1	280	415	163	224	329	66,0
10000VA	2	356	173	370	200	139	72,0
12000VA	2	416	153	420	250	119	90,0
15000VA	2	416	183	420	250	149	115,0
20000VA	2	416	213	420	250	179	150,0
30000VA	2	475	245	495	300	186	215,0
40000VA	2	475	245	495	300	186	235,0

*/ CC- Dimensions

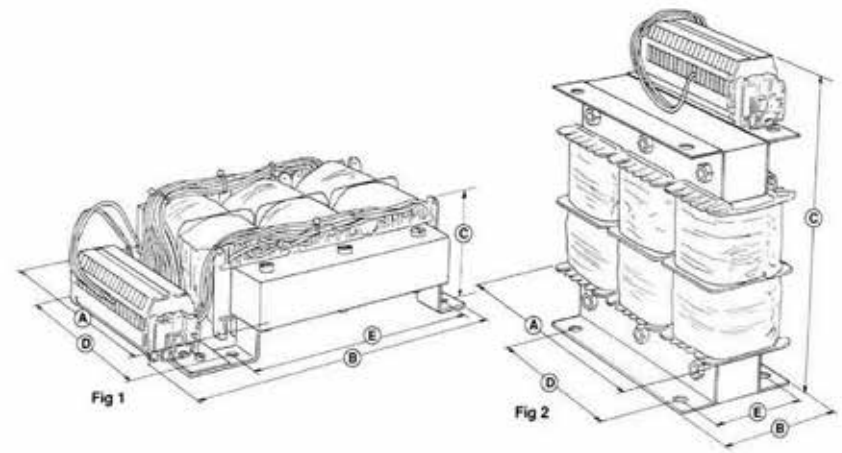

Tecnical specifications:

Primary voltage max.	3x690V
Secondary voltage max.	3x690V
Frequency	50/60Hz
Power	35VA-20000VA UL506 40VA-30000VA UL1446/IEC61558-1
Vector Group	DYN11
Insulation class	B or F
Ambient temperature	Up to 70°C
IP class:	00 or optional
Standards according to	IEC61558-1

Three Phase Transformer

Standard Program, 3x400V Primary Voltage

Item Number	Secondary Voltage	Power Ta/40
TO19155	3x400V	100VA
TO19156	3x400V	200VA
TO19157	3x400V	300VA
TO19158	3x400V	500VA
TO19159	3x400V	800VA
TO19160	3x400V	1000VA
TO19161	3x400V	1200VA
TO19162	3x400V	1500VA
TO19163	3x400V	2000VA
TO19164	3x400V	3000VA
TO19165	3x400V	4500VA
TO19166	3x400V	6000VA
TO19167	3x400V	8000VA
TO19168	3x400V	10000VA
TO19169	3x400V	12000VA
TO19170	3x400V	15000VA
TO19171	3x400V	20000VA
TO19173	3x400V	30000VA
TO19175	3X400V	40000VA

Standard Program, 3x500V Primary Voltage

Item Number	Secondary Voltage	Power Ta/40
TO19075	3x400V	100VA
TO19076	3x400V	200VA
TO19077	3x400V	300VA
TO19078	3x400V	500VA
TO19079	3x400V	800VA
TO19080	3x400V	1000VA
TO19081	3x400V	1200VA
TO19082	3x400V	1500VA
TO19083	3x400V	2000VA
TO19084	3x400V	3000VA
TO19085	3x400V	4500VA
TO19086	3x400V	6000VA
TO19087	3x400V	8000VA
TO19088	3x400V	10000VA
TO19089	3x400V	12000VA
TO19090	3x400V	15000VA
TO19091	3x400V	20000VA
TO19093	3x400V	30000VA
TO19195	3x400V	40000VA

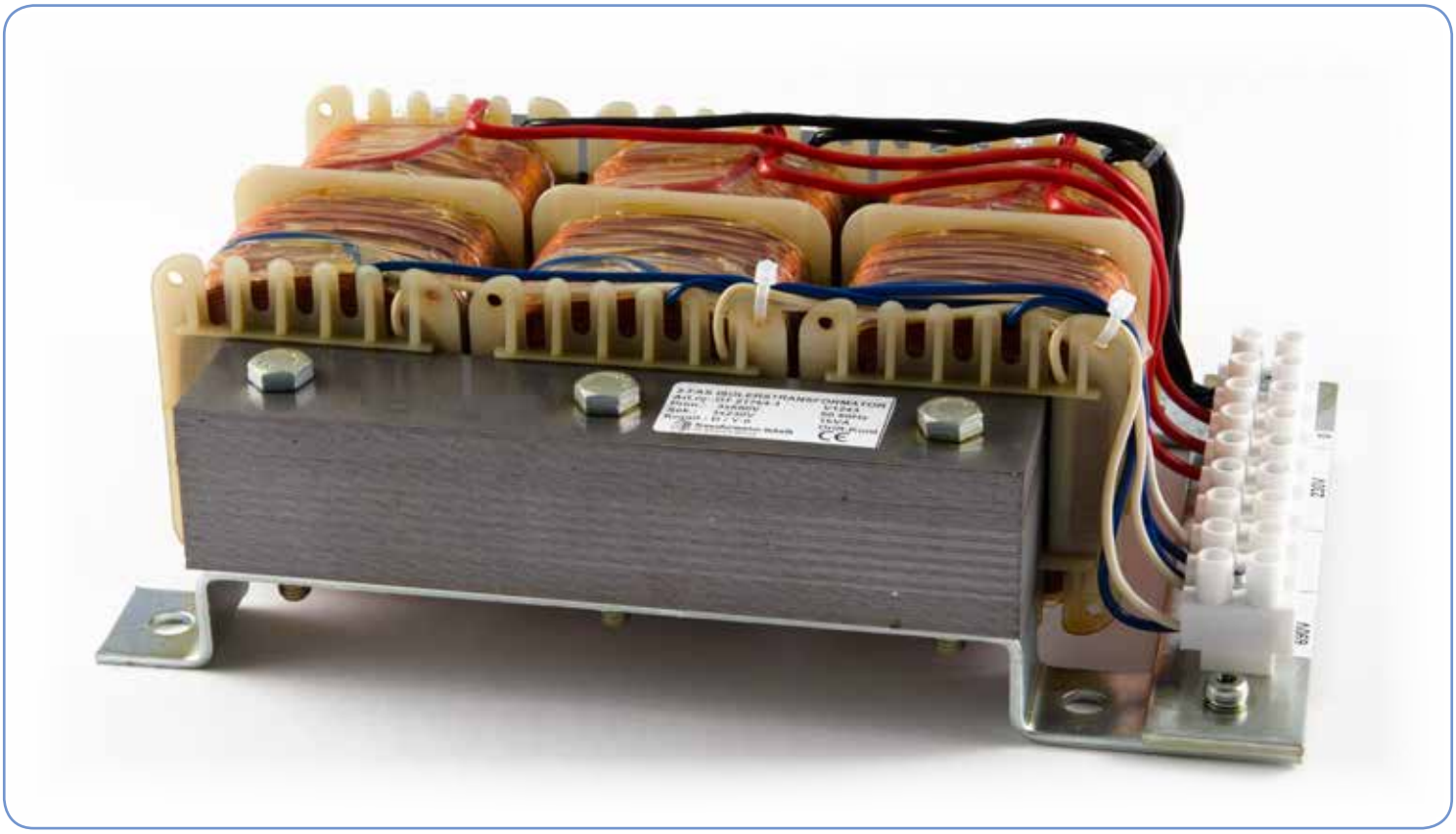

Three Phase Transformers 100VA - 40KVA, TPK Series, IP21

Power	Dimensions according to fig.	A (mm)	B (mm)	C (mm)	Approx Weight (kg)
1000VA	1	260	400	165	19,0
2000VA	1	260	400	165	27,0
3000VA	1	260	400	165	36,0
4500VA	1	335	450	225	49,0
6000VA	1	335	450	225	69,0
8000VA	1	335	450	225	72,0
10000VA	2	380	510	458	80,0
12000VA	2	380	510	458	95,0
15000VA	2	400	560	518	125,0
20000VA	2	400	560	518	160,0
30000VA	2	440	560	580	225,0
40000VA	2	440	560	580	245,0

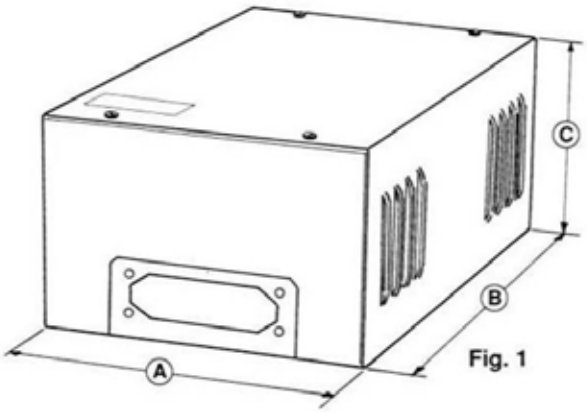

Fig. 1

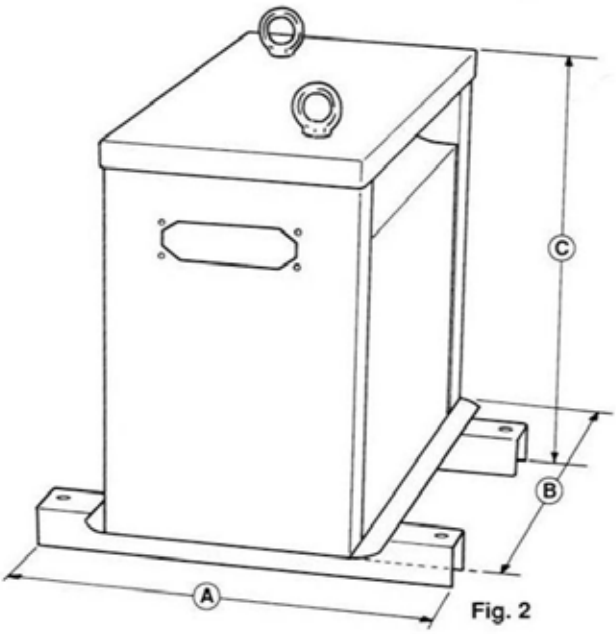

Fig. 2

Standard Program, 3x400V Primary Voltage

Item Number	Secondary Voltage	Power Ta/40
TPK19160	3x400V	1000VA
TPK19163	3x400V	2000VA
TPK19164	3x400V	3000VA
TPK19165	3x400V	4500VA
TPK19166	3x400V	6000VA
TPK19167	3x400V	8000VA
TPK19168	3x400V	10000VA
TPK19169	3x400V	12000VA
TPK19170	3x400V	15000VA
TPK19171	3x400V	20000VA
TPK19173	3x400V	30000VA
TPK19175	3x400V	40000VA

Standard Program, 3x500V Primary Voltage

Item Number	Secondary Voltage	Power Ta/40
TPK19080	3x400V	1000VA
TPK19083	3x400V	2000VA
TPK19084	3x400V	3000VA
TPK19085	3x400V	4500VA
TPK19086	3x400V	6000VA
TPK19087	3x400V	8000VA
TPK19088	3x400V	10000VA
TPK19089	3x400V	12000VA
TPK19090	3x400V	15000VA
TPK19091	3x400V	20000VA
TPK19093	3x400V	30000VA
TPK19095	3x400V	40000VA

Three Phase Transformers 100VA - 40KVA, TSP Series, IP54

Power	Dimensions according to fig.	A (mm)	B (mm)	C (mm)	Approx Weight (kg)
1000VA	1	300	400	200	22,5
2000VA	1	300	400	200	28,5
3000VA	1	400	500	200	43,0
4500VA	1	400	500	200	54,0
6000VA	2	500	300	500	83,0
8000VA	2	500	300	500	83,0
10000VA	2	500	300	500	92,0
12000VA	2	600	400	600	110,0
15000VA	2	600	400	600	135,0
20000VA	2	600	400	600	170,0
30000VA	2	600	400	600	235,0
40000VA	2	600	400	600	255,0

fig.1

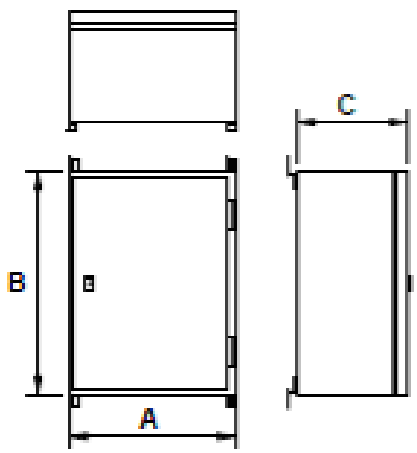

fig.2

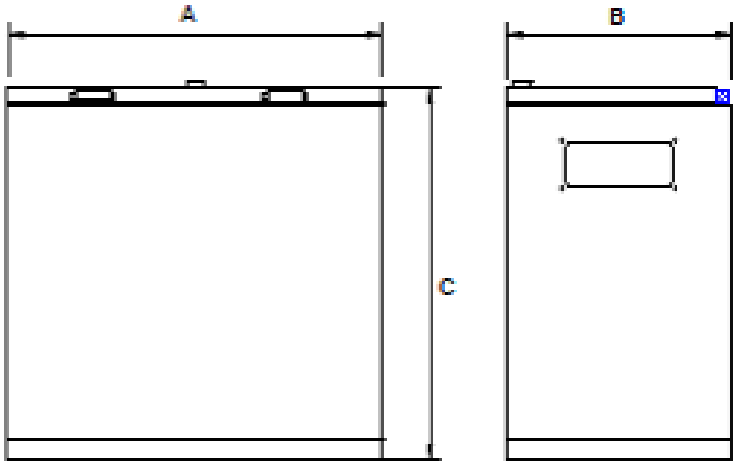

Standard Program, 3x400V Primary Voltage

Item Number	Secondary Voltage	Power Ta/40
TSP19160	3x400V	1000VA
TSP19163	3x400V	2000VA
TSP19164	3x400V	3000VA
TSP19165	3x400V	4500VA
TSP19166	3x400V	6000VA
TSP19167	3x400V	8000VA
TSP19168	3x400V	10000VA
TSP19169	3x400V	12000VA
TSP19170	3x400V	15000VA
TSP19171	3x400V	20000VA
TSP19173	3x400V	30000VA
TSP19175	3x400V	40000VA

Standard Program, 3x500V Primary Voltage

Item Number	Secondary Voltage	Power Ta/40
TSP19080	3x400V	1000VA
TSP19083	3x400V	2000VA
TSP19084	3x400V	3000VA
TSP19085	3x400V	4500VA
TSP19086	3x400V	6000VA
TSP19087	3x400V	8000VA
TSP19088	3x400V	10000VA
TSP19089	3x400V	12000VA
TSP19090	3x400V	15000VA
TSP19091	3x400V	20000VA
TSP19093	3x400V	30000VA
TSP19095	3x400V	40000VA

General information

When galvanic isolation is not needed between Primary and Secondary, the auto transformer is a more cost effective way of producing a transformer.
In an autotransformer, portions of the same winding act as both the primary and secondary winding, at the same time, and therefore less copper is used.

Autotransformers have the advantages of often being smaller, lighter, and cheaper than typical dual-winding transformers, but autotransformers have the disadvantage of not providing galvanic isolation. Autotransformers can be both single or 3 phase.

Applications:

Autotransformers are frequently used in power applications to interconnect systems operating at different voltages, for example machinery built for 400 V supplies, to operate on a 690 V supply. Soft start of AC electrical motors, temporarily to reduce the load, torque and inrush current.

Dimensioning Auto Transformers:

For the dimensioning (size and weight) the 1 winding auto transformer deviates from the traditional isolating 2 winding transformer. E.g. in situations where a 2:1 conversion is needed both the core and the copper used can be reduced up to 50%, if a 20kVA autotransformer is needed the dimensions from a 10kVA traditional transformer can be used, however this only applies in this specific case of the 2:1 conversion, so for your design and specification please contact us.

Options:

We offer Auto Transformers based on both Cupper and Aluminium. Building with Aluminium reduce weight and cost, but can require more space, depending on requirements.

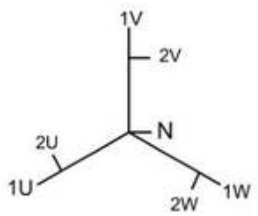

Standard Program, Autotransformer

Item Number	Secondary Voltage	Power kVA	Inverse operation
ATTP 1110	3*400/440/690V	10	Yes
ATTP 1120	3*400/440/690V	20	Yes
ATTP 1140	3*400/440/690V	40	Yes
ATTP 1100	3*400/440/690V	100	Yes
ATTP 1210	3*200/230/400V	10	Yes
ATTP 1220	3*200/230/400V	20	Yes
ATTP 1240	3*200/230/400V	40	Yes
ATTP 1280	3*200/230/400V	80	Yes

Tecnical specifications:

Voltage	3x200-690V
Frequency	50/60Hz
Vector Group	YNa0
Insulation class	B or F
Ambient temperature	40°C
IP class:	00
Standards according to	IEC61558-1
UL Recognized	UL1446

Toroid Transformer

General information

Toroidal Transformer have a lower size and weight compared to traditional Transformers. Due to the closed magnetic loop the radiation and interference is minimized. Toroidal Transformers are based on grain oriented lamination. The design secures high efficiency with a minimum of noise and no load losses.
DANTRAFO Group production of Toroidal Transformers is highly integrated including own manufacturing of basic cores.

Application

With the advantages of Toroidal Transformers it is ideal for many applications e.g. within medical, audio and various numbers of applications. Toroidal Transformers are well suited for Isolating as well as auto transformers.

Design

Standard Toroidal Transformer range from 15VA to 3200VA. Designed according to IEC61558.

Installation

Standard Toroidal Transformers are delivered with a mounting kit consisting of rubber pads and metal washer. Delivered with 300mm wires for termination.

Standard Program, 230V Primary Voltage

Item Number	Secundary Voltage	VA Ta40	Diameter/hight
RCT 11101	2x6V	30	65/45
RCT 11102	2x6V	50	90/40
RCT 11103	2x6V	80	90/50
Item Number	Secundary Voltage	VA Ta40	
RCT 11104	2x12V	30	65/40
RCT 11105	2x12V	50	90/40
RCT 11106	2x12V	80	90/50
RCT 11107	2x12V	100	102/48
RCT 11108	2x12V	180	105/64
Item Number	Secundary Voltage	VA Ta40	
RCT 11109	2x24V	30	65/45
RCT 11110	2x24V	50	90/40
RCT 11111	2x24V	80	90/50
RCT 11112	2x24V	100	102/48
RCT 11113	2x24V	180	105/64
RCT 11114	2x24V	300	122/65
RCT 11115FPD	1x24V	40	65/45
RCT 11116	2x115V/1x24V	500	145/71

Customized Design

It's possible to customize core dimensions to meet space and performance requirements. The product can be delivered with different mounting methods e.g.vertical or horizontial mounting, center potted, housing potted.

Tecnical specifications:

Primary voltage max.	600V
Secondary voltage max.	600V
Frequency	50/60Hz
Power	15VA-3200VA
Insulation class	A,B or F
Ambient temperature	up to 70°C
IP class	00 or optional
Standards according to	IEC 61558-1
UL Recognized	UL1446 / UL5085/ UL 60950-1/ UL 60601-1

General information

For high efficiency, and reduced no load loss and space savings purpose, the 3 fased toroid is excellent.

Applications:

“Green application” and where limited space are required, e.g. for control and isolation or for autotransformer.

How to Order

This product is customized according to customers need, please contact us for your enclousure and design.

Tecnical specifications:

Primary voltage max.	600V
Secondary voltage max.	600V
Frequency	50/60Hz
Power	1kVA-10kVA
Insulation class	B or F
Ambient temperature	up to 70°C
IP class	00 or optional
Standards according to	IEC 61558
UL Recognized	UL1446

Toroidal Transformers Program range

Type/VA	D	d2	B	C	h	class A	class B	class F	Weight
CTC 15	59	12	40	44	6,2	X	X	X	290
CTC 11	63	10	28	32	6,2	X	X	X	200
CTC 15A	63	11	31	35	6,2	X	X	X	250
CTC 20	65	11	36	40	6,2	X	X	X	310
CTC 30	65	14	45	49	6,2	X	X	X	425
CTC 32	78	15	40	49	6,2	X	X	X	470
CTC 40	75	15	45	49	6,2	X	X	X	600
CTC 50	86	16	40	49	6,2	X	X	X	690
CTC 62	83	18	45	49	6,2	X	X	X	800
CTC 80	85	18	50	49	6,2	X	X	X	1000
CTC 95	85	22	56	49	6,2	X	X	X	1200
CTC 80	102	18	45	49	6,2	X	X	X	880
CTC 100	102	18	50	49	6,2	X	X	X	1050
CTC 135	102	20	55	49	6,2	X	X	X	1250
CTC 180	100	22	62	49	6,2	X	X	X	1600
CTC 140	122	22	43	48	8,2	X	X	X	1400
CTC 170	128	24	46	51	8,2	X	X	X	1750
CTC 220	120	26	52	57	8,2	X	X	X	2200
CTC 300	118	28	60	65	8,2	X	X	X	2700
CTC 260	126	25	60	65	8,2	-	X	X	2200
CTC 320	132	22	68	73	8,2	-	X	X	2600
CTC 275	132	18	58	63	8,2	-	X	X	2600
CTC 320A	125	28	55	60	8,2	-	X	X	2800
CTC 340	130	22	64	69	8,2	-	X	X	3000
CTC 380	140	30	58	63	8,2	-	X	X	3800
CTC 500	145	32	66	71	8,2	-	X	X	4500
CTC 630	148	32	75	80	8,2	-	X	X	4900
CTC 700	148	32	80	85	8,2	-	X	X	6300
CTC 850	170	38	80	85	8,2	-	X	X	7400
CTC 1000	164	40	87	93	10,5	-	X	X	
CTC 1200	164	42	95	93	10,5	-	X	X	3100
CTC1000A	190	42	83	93	10,5	-	X	X	
CTC 1600	205	40	80	93	10,5	-	-	X	8500
CTC 2000	210	45	97	93	10,5	-	-	X	
CTC 2500	232	43	93	93	10,5	-	-	X	13000
CTC 3200	236	48	107	93	10,5	-	-	X	15300

The dimentions in the tabel are according to UL5085, for UL1446, UL60950-1, UL60601-1 and IEC 61558-1 other dimentions can be available.

The dimentions in the tabel are based on class A, class A transformer, has a lower temperature rise, due to use af more material, this also secures a lower no load loss. The Temperature class B and F, can be used to gain more power on the same core size or to reduce material compared to a class A type.

Products not available in the tabel for a specific temperature class can be design on the next size of core. e.g. 500VA i Class A, can be obtained on the 630VA core size.

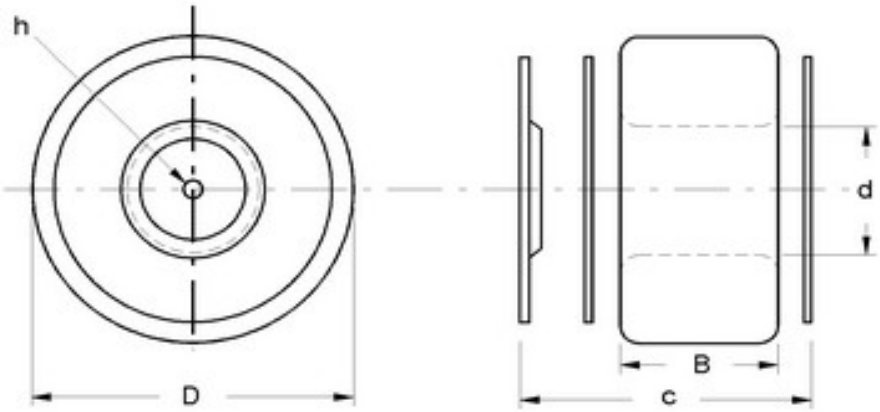

DANTRAFO Group
DANTRAFO A/S, Transformator-Teknik, Dantrafo Electronics Suzhou

General information

C Core Transformers have a lower size and weight compared to traditional Transformers. Due to the cutting of the oval core into the c-shape the winding process can be optimized. The C core Transformer has most of the Toroidal Transformers features and benefits, but with a more industrialized production form.
The C core is based on grain oriented lamination. The design secures high efficiency with a minimum of noise, magnetic radiation, and no load losses.

DANTRAFO Group production of C core Transformers is highly integrated including own manufacturing of basic cores.

Application

The C Core Transformers is ideal for many applications e.g. within medical, audio and various numbers of applications. C Core Transformer are well suited for Isolating as well as auto transformers.

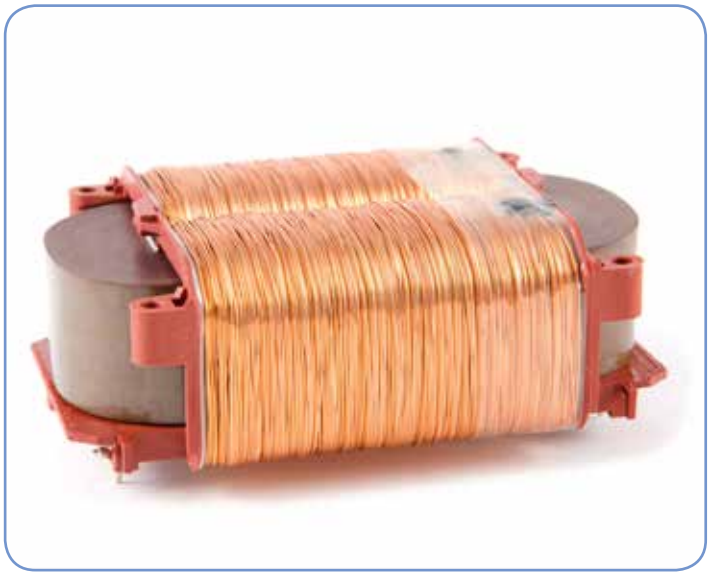

Design

C Core Transformers are design either as single c-core transformer (BC/LPC) or dual c-core (CC) transformers, ranging from 20VA to 4000VA. Designed according to IEC61558.
C Core transformer can be delivered as open, encapsulated and for PCB use.

Installation

Termination: Free wires or terminals
Mounting: with mounting angles

Customized Design

It's possible to customize core dimensions to meet space and performance requirements.

How to Order

This product is customized according to customers need, please contact us for your design.

Tecnical specifications:

Primary voltage max.	400V
Secondary voltage max.	3000V
Frequency	<500HZ
Power	0-2000VA
Insulation class	I, II
Ambient temperature	up to 40°C
IP class	00
Standards according to	IEC 61558
UL Recognized	UL1446

BC Core Transformers Program range

Type	VA	A	B	C	F	G	Weight
BC 8-20	20	60	32	48	51	48	330
BC 8-25	26	60	37	48	51	48	390
BC 10-25/45	36	85	40	61	51	75	580
BC 10-25/50	55	91	44	69	58	78	770
BC 13-30	88	93	45	74	61	74	1040
BC 12,5-25	98	110	40	75	82	67,5	1110
BC 14-40	144	108	55	76	78	67,5	1530
BC 16,5-25	179	127	45	97	84	86,5	1780
BC 21-30	302	144	56	111	86	100	2850
BC 22-25	270	148	44	124	84	113	2750
LPC 30	20	73	31	56	66	49	370
LPC 35	35	73	37	56	86	49	480
LPC 40	45	92	38	67	70	48	630
LPC 45	72	92	48	67	70	48	850
LPC 60	100	112	47	83	86	64	1200
LPC 65	150	112	58	83	86	64	1600
LPC 70	220	139	60	104	108	80	2300
LPC 75	320	139	75	104	108	80	3200

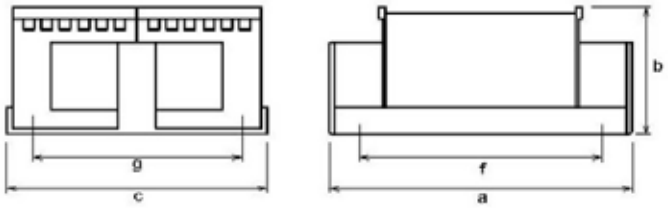

CC Core Transformers Program range

Type	VA	A	B	C	F	G	Weight
CC 8-20	24	59	53	50	44	32	420
CC 8-25	32	59	53	55	44	37	540
CC 10-20	44	71	65	50	56	32	670
CC 10-32	70	71	65	62	56	44	930
CC 12.5-25	100	87	76	58	70	40	1200
CC 12,5-32	120	87	78	66	70	47	1500
CC 12,5-40	150	87	78	74	70	55	1800
CC 16-32	200	109	96	75	90	50	2500
CC 16-45	300	109	96	88	90	63	3200
CC 20-45	500	145	118	100	100	73	5400
CC 20-60	650	145	118	112	100	88	6600
CC 25-45	850	182	147	112	143	80	7800
CC 25-60	1100	182	147	127	143	95	9800
CC 25-90	1700	182	147	169	143	125	13800
CC 32-60	2500	225	198	145	180	100	17000

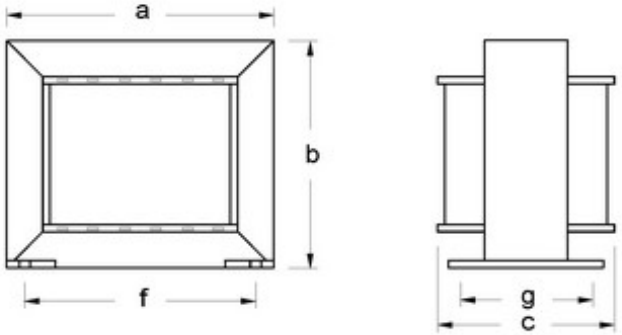

DANTRAFO Group
DANTRAFO A/S, Transformator-Teknik, Dantrafo Electronics Suzhou

Plastic Enclosed single Phase Transformer

General information

Safety or isolating single phase transformers with rated power range between 60VA and 600VA.
The transformers are manufactured according to the IEC/EN 61558 Standards. The protection index is IP44. The transformers can be loaded to 100% of the rated power, at Ambient temperature. up to 40C. There is a wide range of Transformers in stock and special transformers are designed on request.

The standard Series

SP, 60-600VA

Installation

For power supply in control circuits, distribution circuits, Control panels and drives.

Design

Pressure plate terminals ensure secure connections, with Screw fixing.
The transformers have protection against humidity and vibration. All isolation materials are UL approved.

Customized Design

Can be designed with primary and secondary cord set or primary and secondary leads out. Available on request with dual primary and secondary.

Tecnical specifications:

Primary voltage max.	1100V
Secondary voltage max.	1000V
Frequency	50/60Hz
Power	60VA - 600VA
Insulation class	B or F
Ambient temperature	40°C
IP class	44
Standards according to	IEC61558-2-2 Max input 1000V/ Max output 1000V IEC61558-2-4 Max input 1100V/ Max output 1000V IEC61558-2-6 Max input 1100V/ Max output 50V Can be produced according to UL1446

DANTRAFO Group
DANTRAFO A/S, Transformator-Teknik, Dantrafo Electronics Suzhou

Plastic Enclosed single Phase Transformer

Standard Program, 230V Primary Voltage

Item Number	Secondary Voltage	Power Ta/40
SP17805	11,5V	60VA
SP17806	11,5V	120VA
SP17807	11,5V	240VA
SP17808	11,5V	300VA
SP17809	11,5V	480VA
SP18419	11,5V	600VA

Item Number	Secondary Voltage	Power Ta/40
SP17810	24V	60VA
SP17811	24V	120VA
SP17812	24V	240VA
SP17813	24V	300VA
SP17814	24V	480VA
SP18415	24V	600VA

Item Number	Secondary Voltage	Power Ta/40
SP20235	110V	60VA
SP20236	110V	120VA
SP20237	110V	240VA
SP20238	110V	300VA
SP20239	110V	480VA
SP20240	110V	600VA

Standard Program, 400V Primary Voltage

Item Number	Secondary Voltage	Power Ta/40
SP20241	24V	60VA
SP20242	24V	120VA
SP20243	24V	240VA
SP20244	24V	300VA
SP20245	24V	480VA
SP20246	24V	600VA

Item Number	Secondary Voltage	Power Ta/40
SP19006	230V	60VA
SP19007	230V	120VA
SP19008	230V	240VA
SP19009	230V	300VA
SP19010	230V	480VA
SP19011	230V	600VA

Standard Program, 440V Primary Voltage

Item Number	Secondary Voltage	Power Ta/40
SP20247	230V	60VA
SP20248	230V	120VA
SP20249	230V	240VA
SP20250	230V	300VA
SP20251	230V	480VA
SP20252	230V	600VA

Standard Program, 500V Primary Voltage

Item Number	Secondary Voltage	Power Ta/40
SP20253	230V	60VA
SP20254	230V	120VA
SP20255	230V	240VA
SP20256	230V	300VA
SP20257	230V	480VA
SP20258	230V	600VA

Dimensions

Power	A (mm)	B (mm)	C (mm)	Weight (kg)
60VA	73	117	65	1,2
120VA	109	160	93	4,1
240VA	109	160	93	4,1
300VA	109	160	93	4,1
480VA	129	184	114	7,7
600VA	129	184	114	7,7

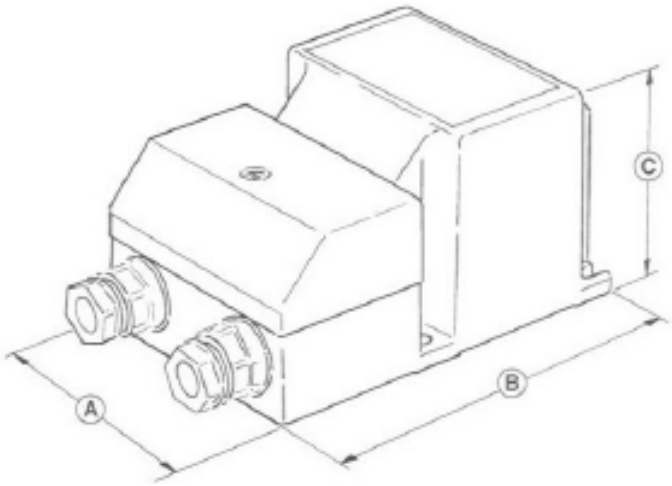

DANTRAFO Group
DANTRAFO A/S, Transformator-Teknik, Dantrafo Electronics Suzhou

General information

Enclosed isolating Low Voltage Transformers for Halogen light and other indoor automation applications, ranging from 60 to 300VA.

Design

Mounted in white plastic box for indoor installation. With automatic circuit breaker in case of overheating, or short circuiting.
Optional distribution box for extra terminal blocks or AMP connectors and individual fuse block

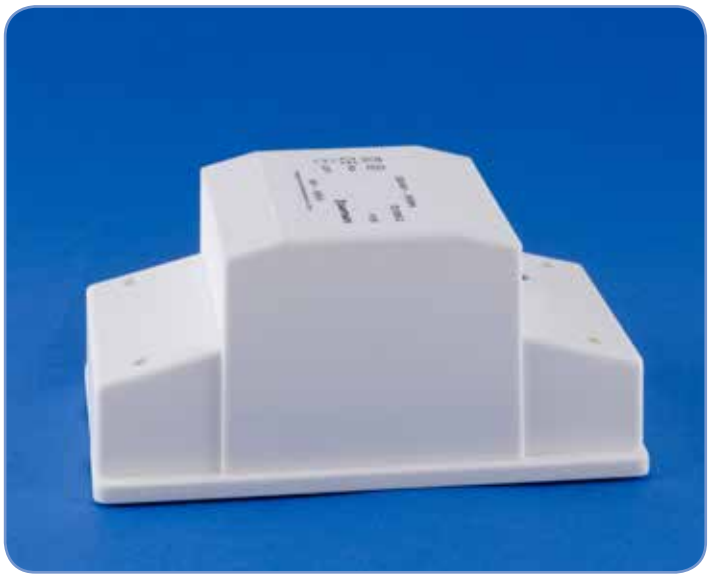

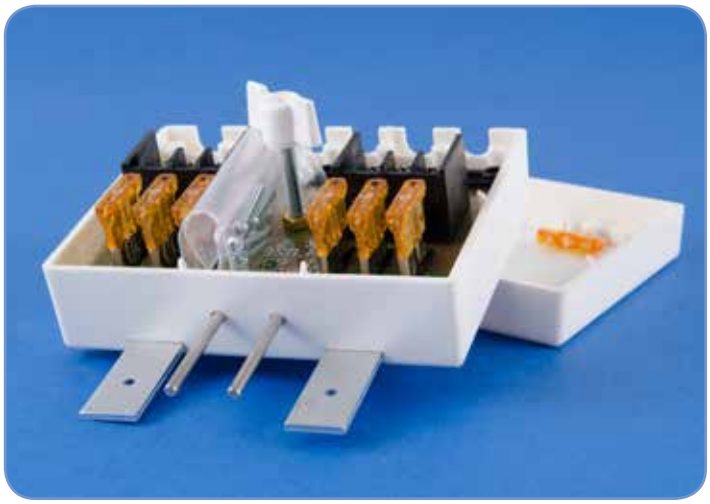

Tecnical specifications:

Primary voltage max.	240V
Secondary voltage max.	42V
Frequency	50/60Hz
Power	Up to 300VA
Insulation class	E
Ambient temperature	35°C
IP class	IP30

CE

Lighting Transformers, F60-105

Item Number White	Secondary Voltage AC	Primary Curent A	Secondary Current A	Short circuit Current A	Δt K	Weight Kg	Auto Fuse A/sec	VA
TD 6958.2	11,3	0,35	5,3	< 44	50	1,6		60
TD 6729.2	12	0,35	5	< 42	50	1,6	40/7, 20/30	60
TD 6955.2	24	0,35	2,5	< 21	50	1,6		60
TD 6954.2	11,3	0,45	7	< 48	50	1,65		80
TD 6721.2	12	0,45	6,7	< 46	50	1,65	45/7, 22/30	80
TD 6959.2	24	0,45	3,3	<23	50	1,65		80
TD 6962.2	11,3	0,55	9,3	< 74	55	1,7		105
TD 6730.2	12	0,55	8,8	< 70	55	1,7	65/7, 32/30	105
TD 6963.2	24	0,55	4,4	< 35	55	1,7		105

Accessories

3 terminal block	TD 6882.0
5 terminal AMP	TD 6883.0

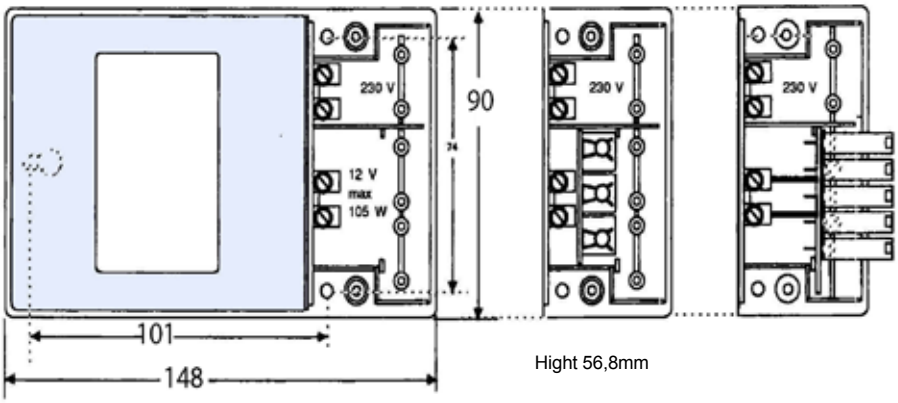

Lighting Transformers, F150-300

Item Number White	Secondary Voltage AC	Primary Current A	Secondary Current A	Short circuit Current A	Δt K	Weight Kg	Auto Fuse A/sec	VA
TD 6367.2	12	1	12,5	< 170	50	3,8		150
TD 6368.2	24	1	6,3	< 85	50	3,8	100/2,40/10,20/30	150
TD 6369.2	42	1	3,5	< 49	50	3,8		150
TD 6360.2	12	1,2	16,6	< 180	50	3,9		200
TD 6361.2	24	1,2	8,3	< 90	50	3,9	140/2,52/10,27/80	200
TD 6365.2	42	1,2	4,7	< 52	50	3,9		200
TD 6340.2	12	1,6	25	< 74	55	4		300
TD 6342.2	24	1,6	12,5	< 70	55	4	200/2,72/10,38/80	300
TD 6341.2	42	1,6	7,1	< 35	55	4		300

Accessories

Distribution box	White
3x50W	TD 6363.2
2x100W	TD 6362.2
6x50W	TD 6366.2
4x75W	TD 6401.2
2x150W	TD 6403.2

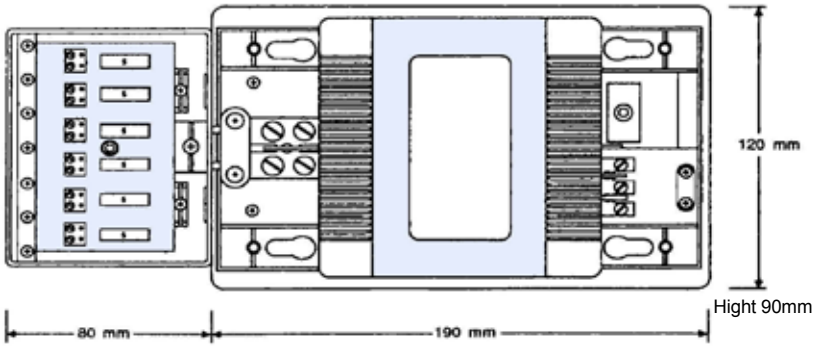

DANTRAFO Group
DANTRAFO A/S, Transformator-Teknik, Dantrafo Electronics Suzhou

General information

Isolation Transformer with mains core (euro plug), for industrial purposes, delivered with a number of termination connectors and plugs.

Design

230V / 6-42 VAC – 40/60VA
ISOLATIONS CLASS Ta35/E
IP 40/44 depending on termination method

40VA

Item Number	Voltage V-AC	Current A	Idle V
TD 11000.xy	6	6,6	6,8
TD 11001.xy	7,5	5,3	8,4
TD 11002.xy	9	4,4	10,1
TD 11003.xy	11,4	3,5	12,8
TD 11004.xy	12	3,3	13,5
TD 11005.xy	15	2,6	16,9
TD 11006.xy	18	2,2	20,3
TD 11007.xy	24	1,6	27,1
TD 11008.xy	36	1,1	40,6
TD 11009.xy	42	0,95	47,5

60VA

Item no	Voltage V-AC	Current A	Idle V
TD 11100.xy	6	10,0	6,6
TD 11101.xy	7,5	8,0	8,3
TD 11102.xy	9	6,6	9,9
TD 11103.xy	11,3	5,3	12,5
TD 11104.xy	12	5,0	13,3
TD 11105.xy	15	4,0	16,5
TD 11106.xy	18	3,3	19,8
TD 11107.xy	24	2,5	26,4
TD 11108.xy	36	1,6	39,6
TD 11109.xy	42	1,4	46,0

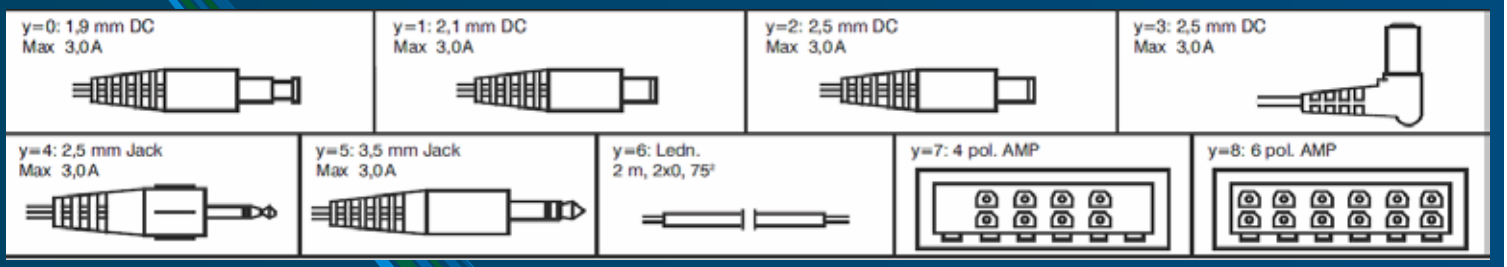

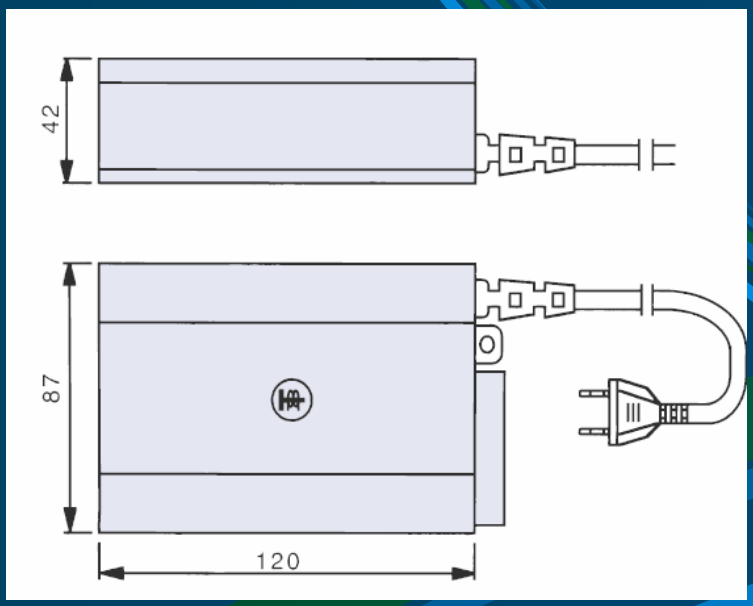

Tecnical specifications:

Primary voltage max.	230V
Secondary voltage max.	42Vac
Frequency	50/60Hz
Power max.	60VA
No load loss max.	85%
Insulation class	E
Ambient temperature	35°C
IP class	up til 44
Weight	1250g

CE

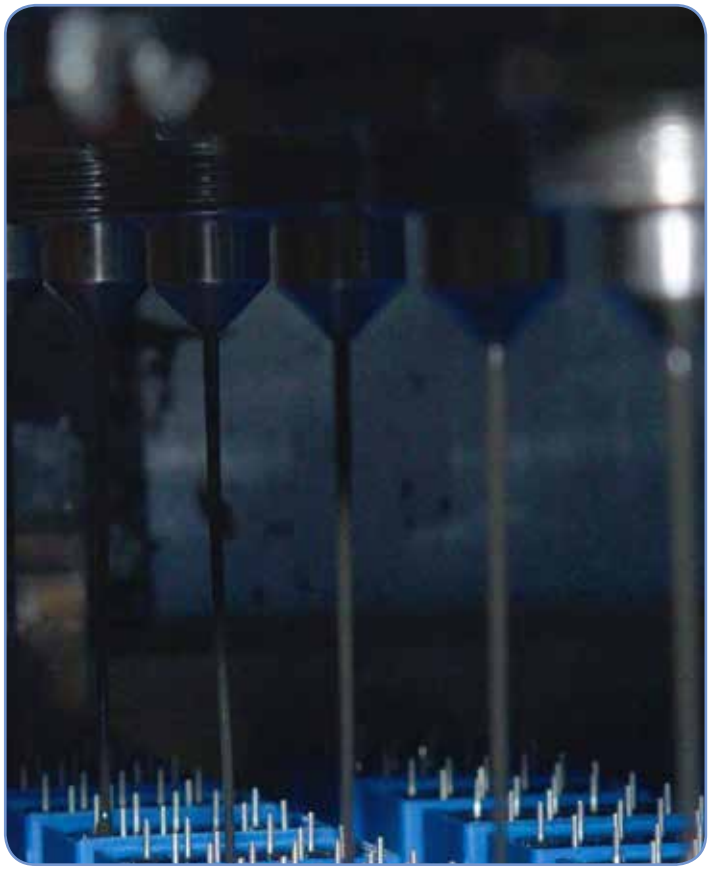

General information

DANTRAFO Group offer a comprehensive range of Power Supplies which can be designed and manufactured to almost any specification and budget for all types of use.

The transformers are manufactured according to IEC/EN 61558 Standards. The transformers can be loaded to 100% of the rated power, at Ambient temperature. up to 40C. There is a wide range of Power Supplies in stock and special Power Supplies are designed on request.

The standard Series

EOL, 1- Phase
TOLG, 3- Phase
DTPS, 1-Phase DIN mounting

Installation

For power supply in control circuits, distribution circuits, Control panels and drives

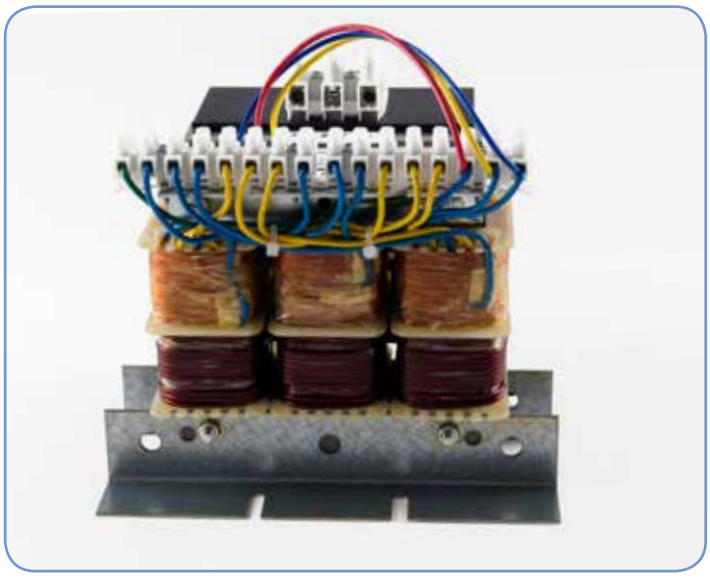

Design

Pressure plate terminals ensure secure connections, with Screw fixing. Power Supplies have protection against humidity and vibration. All insulation materials are UL approved.

Customized Design

Can be designed with primary and secondary fuse, primary and secondary leads out. Available on request with dual primary and secondary.

Tecnical specifications: DTPS

Primary voltage.	230V
Secondary voltage.	24VDC
Frequency	50/60Hz
Power .	2,5A 4,5A 7,5A
Insulation class	B
Ambient temperature	40°C
IP class	00
Standards according to	IEC61558-2-2

Single phase power supply

DTPS Standard Program, 230V

Item Number	Output Voltage DC	Output Current DC	Ripple Max	A (mm)	B (mm)	C* (mm)	D* (mm)	E* (mm)	F (mm)	Weight (kg)
DT 6096a920F	24V	2,5A	1,7Vp-p	96	102	155	84	87	6	2,2
DT 6096b920F	24V	4,5A	3,0Vp-p	96	102	155	84	87	6	3,0
DT 6096c920F	24V	7,5A	5,0Vp-p	96	110	155	84	87	6	3,8

EOL Standard Program, 230V, 400V, ±15V Primary Voltage

Item Number	Output Voltage DC	Output Current DC	Ripple Max	A (mm)	B (mm)	C* (mm)	D* (mm)	E* (mm)	F (mm)	Weight (kg)
EOL16991	12V	2,5A	0,8Vp-p	105	70	98	44	50	4,5	1,5
EOL16992	12V	5,0A	1,4Vp-p	140	84	116	56	65	5,5	3,0
EOL16993	12V	10,0A	1,4Vp-p	150	102	130	64	80	5,5	4,5
EOL16994	24V	1,5A	1,4Vp-p	105	70	98	44	50	4,5	1,5
EOL16995	24V	2,5A	1,2Vp-p	120	74	110	52	55	4,5	2,0
EOL16995	24V	5,0A	2,4Vp-p	150	102	130	64	80	5,5	4,5
EOL16997	24V	10,0A	2,4Vp-p	170	112	153	80	80	7,0	5,5
EOL20197	24V	20,0A	2,4Vp-p	200	133	183	100	95	7,0	8,5
EOL16998	48V	1,5A	2,8Vp-p	140	84	116	56	65	5,5	3,0
EOL16999	48V	2,5A	2,3Vp-p	150	102	130	64	80	5,5	4,5
EOL17000	48V	5,0A	4,6Vp-p	170	120	153	80	80	7,0	5,5
EOL17001	48V	10,0A	4,6Vp-p	200	133	183	100	95	7,0	8,5

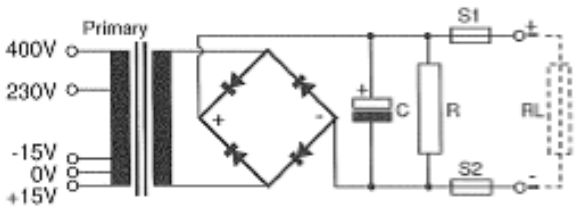

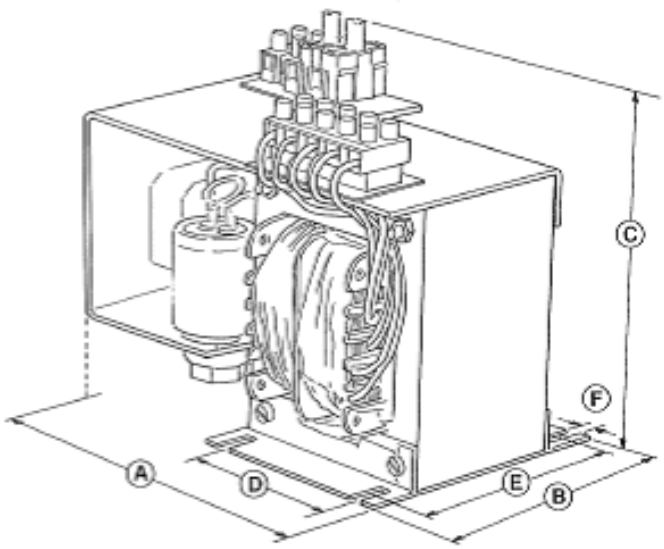

Tecnical specifications EOL Series:

Primary voltage max.	1100V
Secondary voltage max.	1000V
Frequency	50/60Hz
Power	36W-240W Standard or optional
Insulation class	B or F
Ambient temperature	40°C
IP class	00 or optional EPKL/IP21 ESPL/IP54
Standards according to	IEC61558-2-6 Max input 1100V/ Max output 50V Can be produced according to UL1446

DANTRAFO Group
DANTRAFO A/S, Transformator-Teknik, Dantrafo Electronics Suzhou

Three phase power supply, TOLG Series

Standard Program, 230V, 400V, ±15V Primary Voltage

Item Number	Output Voltage DC	Output Current DC	Ripple Max	A (mm)	B (mm)	C* (mm)	D* (mm)	E* (mm)	Weight (kg)
TOLG15217	24V	10,0A	1,5Vp-p	155	90	170	85	160	6,2
TOLG15227	24V	15,0A	1,5Vp-p	155	190	170	85	160	6,2
TOLG16016	24V	20,0A	1,5Vp-p	155	190	190	85	160	8,0
TOLG15216	24V	30,0A	1,5Vp-p	165	190	220	95	160	9,7

*/ CC- Dimensions

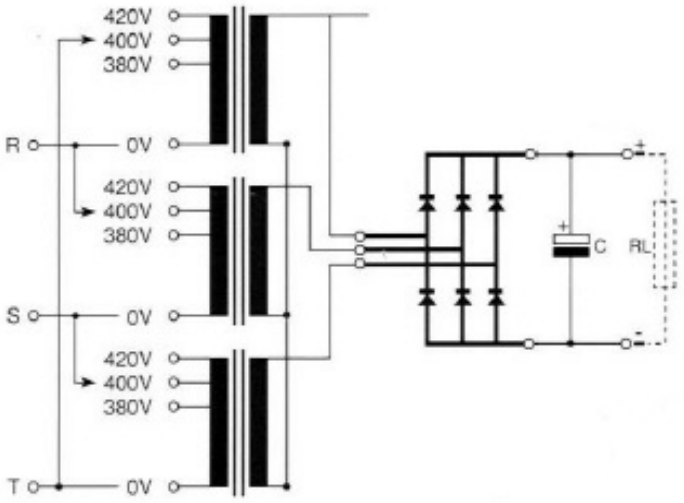

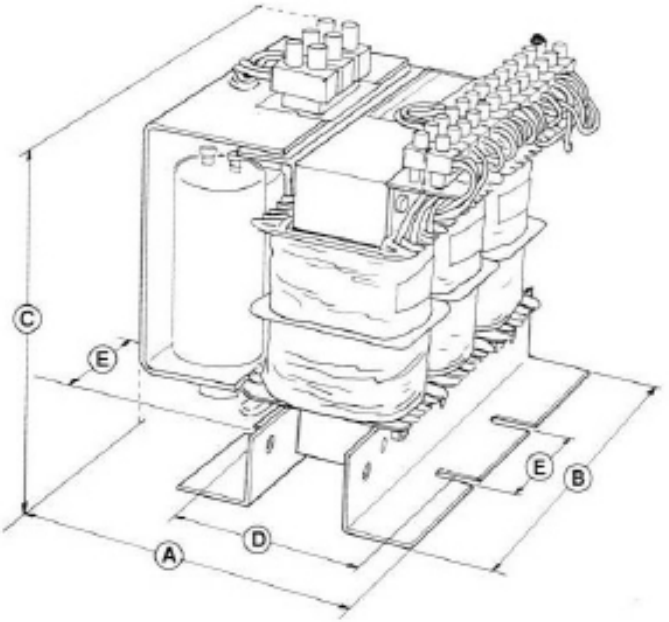

Tecnical specifications TOLG Series:

Primary voltage max.	1100V
Secondary voltage max.	1000V
Frequency	50/60Hz
Power	240W -720W
	Standard or optional
Insulation class	B or F
Ambient temperature	40°C
IP class	00 or optional
	EPKL/IP21
	ESPL/IP54
Standards according to	IEC61558-2-2
	Max input 1000V/
	Max output 1000V
	IEC61558-2-4
	Max input 1100V/
	Max output 1000V
	IEC61558-2-6
	Max input 1100V/
	Max output 50V
	Can be produced
	according to UL1446

DANTRAFO Group
DANTRAFO A/S, Transformator-Teknik, Dantrafo Electronics Suzhou

HF Transformers

General information

The DANTRAFO Group has long experience in customizing HF Transformers developed and optimized according to customer requirements. Both with high-end material or cost effective alternative material.

HF Transformers

HF Transformers are used for a wide range of applications, one of the major applications are for power conversion e.g. Switched Mode Power Supply, where a number of converter types are used.
Some of the applications for HF Transformers are: Drive Transformers, Control Transformers, Flyback Transformers, Current Transformers. Can be produced according to IEC 61558-2-16

The type of ferrites core used can be many, some of the most used are:

- E cores and variations of E cores e.g. EE,EI,EC,EF, EP,EQ,ER,ET…
- U cores and variations of U cores
- P cores and variations of P cores
- RM cores and variations of RM cores
- T cores and variations of T cores

Winding methods and material for HF transformers are many and we master them all.

Standard Program, HF Transformers

Transformer Type	Min. Size	Max. Size
RM	4	14
EE	5	65
EP	5	42
ER	25,5	42,2
ETD	24	59
EFD/EPC	10	30
PQ	2016	4040

From fast prototype to volume production:

Our prototype workshop offers fast prototyping for verification and optimation of your design, and our factories offers small to high level volume production.

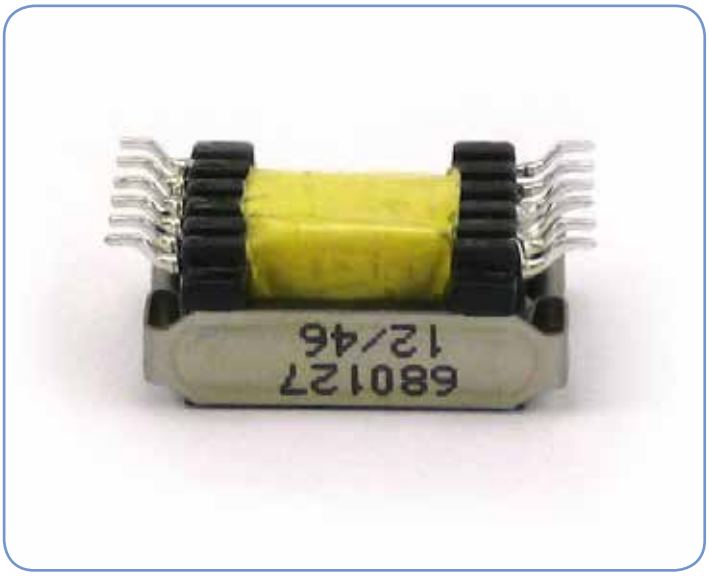

General information

ETD transformers are often used for SMPS applications, working either in foreward, push-pull or flyback mode. ETD are available both with high-end material or cost effective alternative material. Several options can be added like high frequency litz wire or foil winding, static and electrical screens.

From fast prototype to volume production:

Our prototype workshop offers fast prototyping for verification and optimation of your design, and our factories offers small to high level volume production.

ETD		Horisontal			Vertical			Core types			Alt. core available	Potting option	frequencies	Temp class
	Power VA	H	W	D	H	W	D	N27	N87	N97			kHz	
ETD 19	14-75	18,6	24	32,6	35	35	19	x	x	x	yes	yes	20-500	B-F
ETD 29	35-180	25,4	35,3	35,2	43	42,1	24	x	x	x	yes	yes	20-500	B-F
ETD 34	45-280	33,1	39,6	42,8	45	46,5	26,4	x	x	x	yes	yes	20-500	B-F
ETD 39	80-470	36,1	44,6	46,8	49,5	51,5	29	x	x	x	yes	yes	20-500	B-F
ETD 44	150-600	38,5	49,6	52,2	54	56,3	31,5	x	x	x	yes	yes	20-500	B-F
ETD 49	175-725	41	54,5	57,2	58	61,4	34	x	x	x	yes	yes	20-500	B-F
ETD 54	265-1050	46,4	61,5	61,5	64	67,7	36,6	x	x	x	yes	yes	20-500	B-F
ETD 59	400-1750	49,4	66,9	66,4	69	73,1	39,1	x	x	x	yes	yes	20-500	B-F

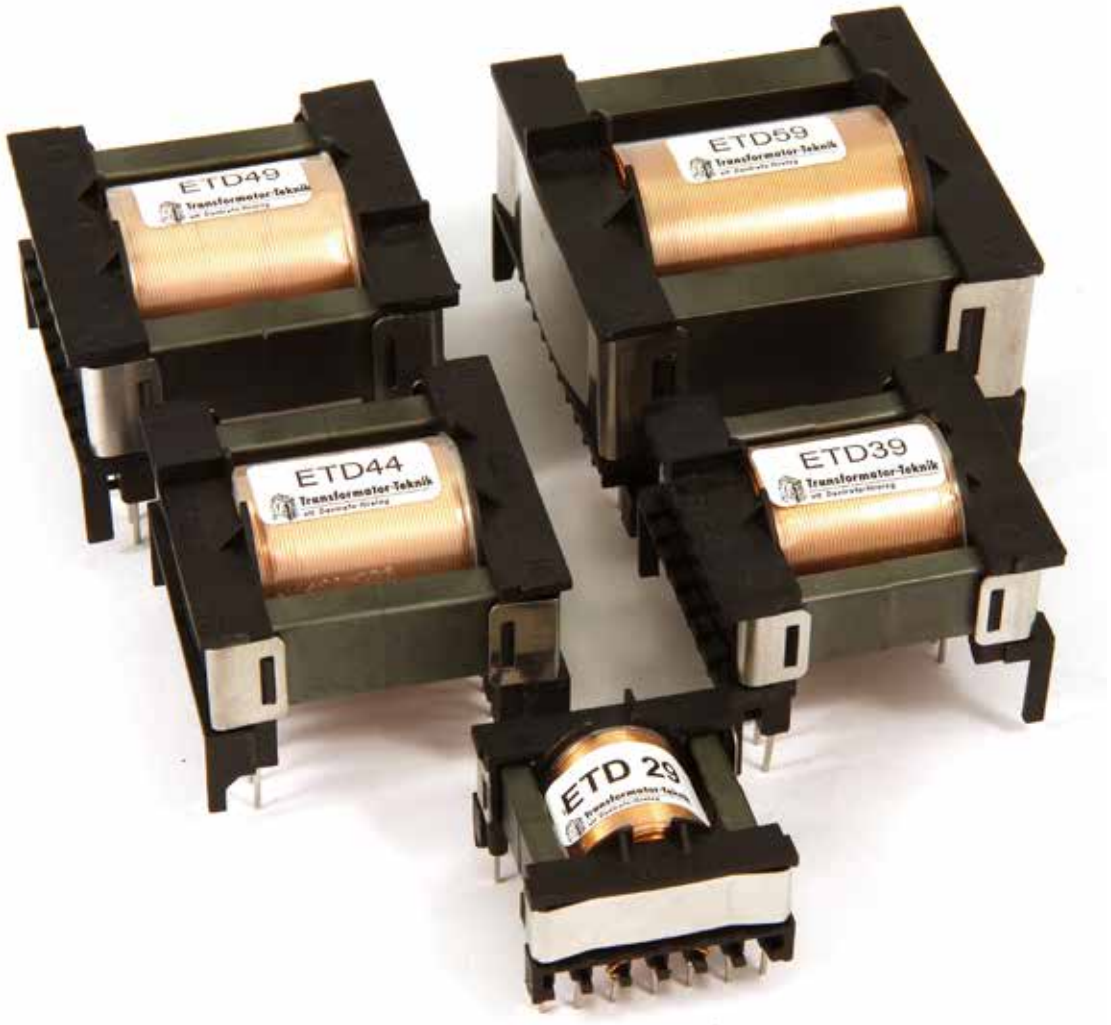

DANTRAFO Group
DANTRAFO A/S, Transformator-Teknik, Dantrafo Electronics Suzhou

HF Transformers EE

General information

EE transformers are often used for Switching power supplies, Feedback control and Overload sensing.
EE are available both with high-end material or cost effective alternative material. Several options can be added like high frequency litz wire or foil winding, static and electrical screens.

From fast prototype to volume production:

Our prototype workshop offers fast prototyping for verification and optimation of your design, and our factories offers small to high level volume production.

EE	Power	Horisontal			Vertical			Core types			Alt. core available	Potting option	frequencies	Temp class
	VA	H	W	D	H	W	D	N27	N87	N97			kHz	
EE 5	0,8	5,02	8,13	7,11				x	x	x	yes	yes	20-500	B-F
EE 8,8	1,3	5,2	9,7	12,2				x	x	x	yes	yes	20-500	B-F
EE 13	2,5	9,5	14,2	15	16	14,5	10	x	x	x	yes	yes	20-500	B-F
EE 16	13	13,5	22	21,9	23	22	13	x	x	x	yes	yes	20-500	B-F
EE 20	26	13,5	22	21,9	23	22	13	x	x	x	yes	yes	20-500	B-F
EE 25	45	17,8	26,8	27,2	32	26	19	x	x	x	yes	yes	20-500	B-F
EE 30	90				19,4	31,9	32,6	x	x	x	yes	yes	20-500	B-F
EE 42	650	34,5	42	43	43	42	34	x	x	x	yes	yes	20-500	B-F
EE 55	1000	44	55	56	51,5	55	56	x	x	x	yes	yes	20-500	B-F

General information

RM transformers are often used for Power electronics, like DC/DC converters. RM transformers are space efficient compared to pot core type of designs.

RM are available both with high-end material or cost effective alternative material. Several options can be added like high frequency litz wire or foil winding, static and electrical screens.

From fast prototype to volume production:

Our prototype workshop offers fast prototyping for verification and optimation of your design, and our factories offers small to high level volume production.

RM	@100kHz push-pull	Vertical			Core types				Alt. core available	Potting option	frequen-cies	Temp class
	Power VA	H	W	D	N41	N49	N87	N97			kHz	
RM 4	5	11,3	16,5	12,6	x	x	x	x	yes	yes	20-500	B-F
RM 5	9	11,3	20,5	16,7	x	x	x	x	yes	yes	20-500	B-F
RM 6	20	13,3	26,5	19,8	x	x	x	x	yes	yes	20-500	B-F
RM 8	22	17,3	31,4	25,4	x	x	x	x	yes	yes	20-500	B-F
RM 10	75	19,5	40,9	31,2	x	x	x	x	yes	yes	20-500	B-F
RM 12	150	25,4	46,7	40,8	x	x	x	x	yes	yes	20-500	B-F
RM14	250	31	49,9	46	x	x	x	x	yes	yes	20-500	B-F

General information

PQ transformers are often used for gapped applications. PQ are available both with high-end material or cost effective alternative material.

Compared with conventional ETD/RM/EE transformers the PQ cores uses less copper wire . As a consequence, costs can be lowered in the transformer production. PQ transformers larger outer areas provide a better heat dissipation. Several options can be added like high frequency litz wire or foil winding, static and electrical screens

From fast prototype to volume production:

Our prototype workshop offers fast prototyping for verification and optimation of your design, and our factories offers small to high level volume production.

PQ	@100kHz					Core types		Alt. core available	Potting option	frequencies	Temp class
	Power VA	H	W	D	N27	N87	N97			kHz	
PQ 2016	23-63	21,1	23,4	23,2	x	x	x	yes	yes	20-500	B-F
PQ 2020	30-95	25,1	23,4	23,2	x	x	x	yes	yes	20-500	B-F
PQ 2620	44-139	25,5	29,8	26,7	x	x	x	yes	yes	20-500	B-F
PQ 2625	60-181	30,1	29,8	26,7	x	x	x	yes	yes	20-500	B-F
PQ 3220	81-244	26,2	34,3	32,2	x	x	x	yes	yes	20-500	B-F
PQ 3230	48-503	36	34,3	32,2	x	x	x	yes	yes	20-500	B-F
PQ 3535	298-893	40,3	39,7	35,1	x	x	x	yes	yes	20-500	B-F
PQ 4040	400-1190	45,1	42,1	40,1	x	x	x	yes	yes	20-500	B-F

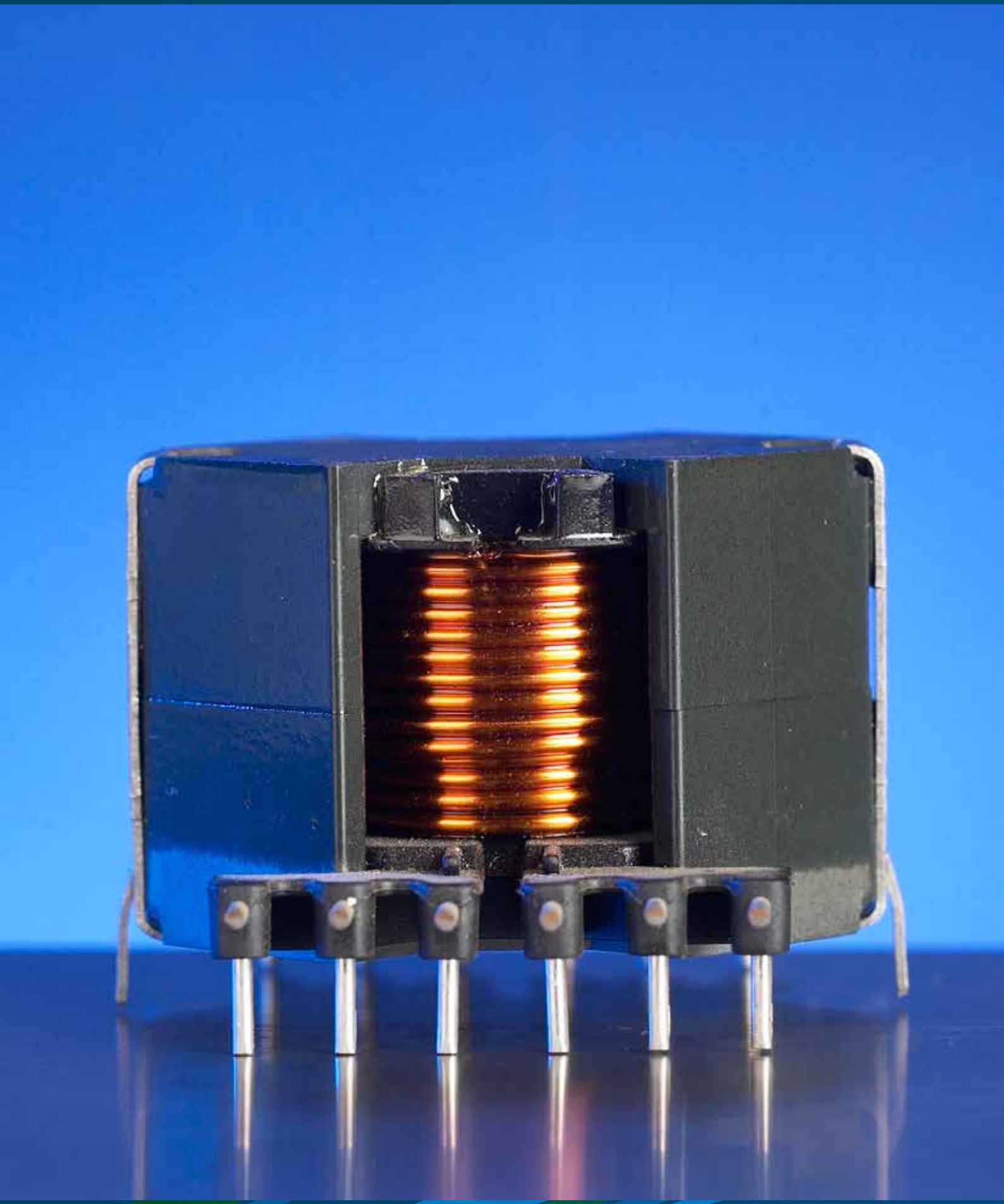

General information

The DANTRAFO Group has long experience in customizing chokes developed and optimized according to customer requirements. Both with high-end material or cost effective alternative material.

Chokes, Coils and Line Reactors

A choke is a coil with insulated wire, often wound on a magnetic core, used as a passive inductor which blocks higher-frequency alternating current (ac) in an electrical circuit while passing signals of much lower frequency and direct current.
The DANTRAFO Group has long experience in customizing Chokes for a wide range of applications. From tiny SMD based coils, to heavyduty industrial foil linereactors passing 1000 of Amps.

The Core material in a choke can vary a lot depending on application, coils with no core, cores made out of laminated grain oriented steel, cores made from soft ferrite used for higher frequencies.
Chokes can be designed as air coils, or like “transformers” on a core of EI, UI or Toroid form.

Application

The applications for chokes are “endless” and used in most electronics today, examples of applications are:

Common-mode choke, 2 or 3 Phase

Common-mode chokes, where two coils are wound on a single core, are useful in a wide range of prevention of electromagnetic interference (EMI) and radio frequency interference (RFI) from power supply lines and for prevention of malfunctioning of electronic equipment. They pass differential currents (equal but opposite), while blocking common-mode currents.

Line Reactor

Chokes in series with the power line, the Line Reactor, is often used to protect an installation (e.g. an electrical motor) from current rushes, transients, harmonics and interference in general.

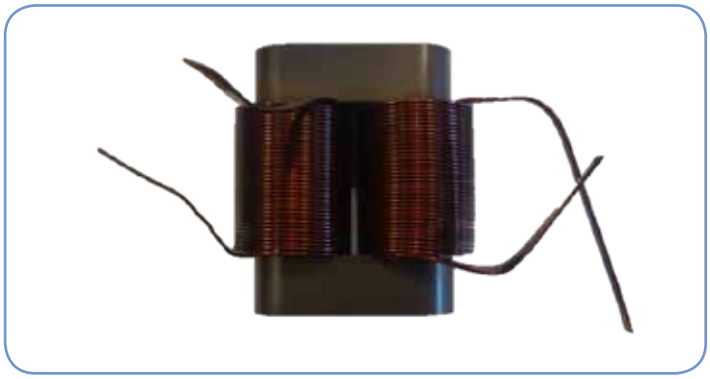

3-phase inductors for frequency converters

General Information

Industrial three-phase inductor solution for frequency converters, specially developed for fast and high switching harmonics. The custom adopted alloy powder material provides high-power density without degrading efficiency. The three-phase construction results into a compact solution with no audible noise among the top features of the product. The soft saturation properties make an ideal three-phase inductor solution for a wide range of applications involving active converters.

Application

LCL filters for general power inverters like wind and solar, dv/dt and sine wave filters for motor drives, UPS and power conditioning systems, EV charging stations, etc.

Customization

For specific requirements please contact us for a customized solution

Typical technical data

IN	LN	fsw	Ipp	Ta	Size	Weight	Eff.
A	mH	kHz	%	°C	LxWxH (mm)	kg	%
16	2	8-16	8-20	40	150x50x140	2,8	>99

Line/Audio Transformer

General information

Most of the Audio transformers made by the DANTRAFO Group are custom specific, and optimized to the customers specification and use. For your design please contact us.

Audio transformers are specifically designed for use in audio circuits. They can be used to block radio frequency interference or the DC component of an audio signal, to split or combine audio signals, or to provide impedance matching between high and low impedance circuits.

Telecom transformers designed to connect different telephone systems, keeping their respective power supplies isolated.

Pulse transformer is a transformer that is optimized for transmitting rectangular electrical pulses often used in digital logic and telecommunications circuits for transmission.

Applications

Professional audio systems, Microphones, Digital Audio transmission, Telephone lines, Transmission lines, PA amplifiers e.g. with 100V outputs, Instrument pickups balanced lines are used almost universally in recording, broadcasting and most large installations where analogue signals need to be fed from one piece of equipment to the next.

General information

The DANTRAFO Group has long experience in customizing Current transformers for a wide range of applications.

Current transformers are special transformers for the proportional transformation of high currents into a “directly” measurable value (low current/voltage).

The construction and physical operating principle enables a galvanic separation of the primary and secondary side to protect the measurement equipment. The current transformer can be designed for printed circuit boards or for high current e.g. mounted in switch cabinet.

The Current transformer can be based on a Ring/Toroid transformer, well suited to feed an external cable thrugh the opening in the ring to measure the current in the cable. Smaller EI type of current transformers are well suited for PCB mounting.

Un-dependent of type or form, the current transformer can be open or encapsulated. Current Transformers are designed for either DC, 50/60Hz, 400Hz or for HF.

For your design requests please contact us.

Customer Specific Products

General information

The DANTRAFO Group is making both a standard series and a customized series of Transformers. The standard series are often in stock, in smaller quantities, or can be delivered with in short time.

Customized Transformers are developed together with our customers to secure an optimal and unique product. The DANTRAFO Group has developed more than 20.000 individual customized transformers.

When a Transformer/inductor is developed specific to one customer, no one else can order this product, without the written authorization of the owner, that way the customer can better protect its design from being copied.

For Customized Transformers, Prototypes are delivered to the customer for verification and test before series production are initiated.

A customized product stays the same and is stored in our product database, and as long as the raw material can be sourced the product can be produced for its original customer.

More than Standard

When standard components must give up, and something special is needed, we can help you out.

Extreme environment

Examples of extreme environment can be:
Temperature
Acceleration
Vibration
Moisture
ATEX environment
High Voltages

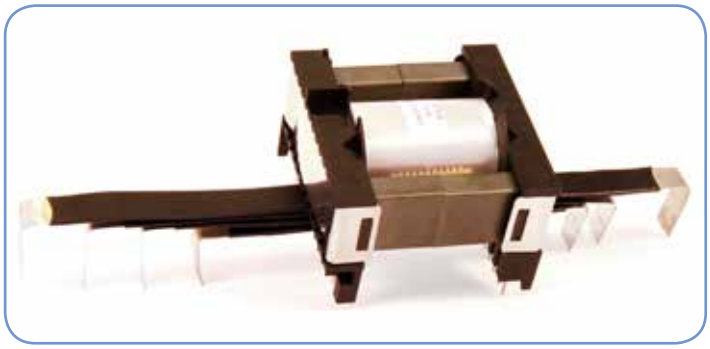

Call us, see number on backside of catalouge

Call us, see number on backside of catalouge

Denmark

Sweden

DANTRAFO has more than 35 years of experience in transformer design and production, with more than 20.000 designs and 1000 customers worldwide. The DANTRAFO Group consists of 3 sites located in Denmark, Sweden and China. All sites have production and development of inductive components in house. We are specialists in design, production and approvals of transformers, reactors, chokes and inductors.

China

DANTRAFO A/S

Fabriksvej 2
7620 Lemvig
Denmark
Tlf +45 76 28 29 30
mail dt@dantrafo.dk
www.dantrafo.dk

DANTRAFO Group

DANTRAFO A/S, Transformator-Teknik, Dantrafo Electronics Suzhou