Slittingsaws from Bassewitz

Our slittingsaws come from our German supplier S.v. Bassewitz, which specializes in solid carbide slittingsaws and special tools of the highest of quality. The slittingsaws in our standard range are fine and coarsely toothed and in diameter up to 200 mm. Other measurements on request, such as radius, zick zack, reinforced core, carrier track, etc. All saws can be obtained with coating and also in a different dental form.

ScandiTools / S.v. Bassewitz designs tools on demand to your production, ranging from single-piece series to small and medium-sized series with very good pricing. We provide technical support in the form of development of processing methods and tool geometries of solid carbide cutting tools for more efficient production.

info@scanditools.com • Tel. (+45) 5616 9999

Steel
Hardened steel
Stainless
Cast iron
Aluminium
Copper
Nickel & Titanium
HSS & Hardened
Graphite

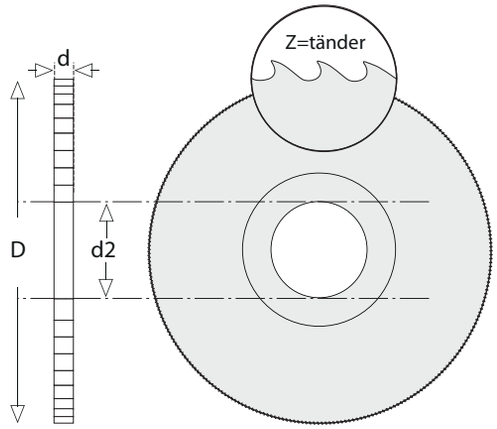

Carbide circular saw blades, DIN 1837
Fine pitch for small cutting depth and short chipping material.

D	20	25	30	40	50	63	80	100	125	160	200
d2	5	8	8	10	13	16	22	22	22	32	32
	Antal tänder										
d											
0,10	80	80	100	128							
0,20	80	80	100	128	128	160					
0,30	64	80	80	100	128	128	160				
0,40	64	64	80	100	100	128	160				
0,50	48	64	80	80	100	128	128	160			
0,60	48	64	64	80	100	100	128	160	160		
0,80	40	48	64	80	80	100	128	128	160		
1,00	40	48	64	64	80	100	100	128	160	160	
1,20	40	48	48	64	80	80	100	128	128	160	
1,40	40	40	48	64	64	80	100	100	128		
1,50	40	40	48	64	64	80	100	100	128	160	160
1,60	40	40	48	64	64	80	100	100	128	160	
1,80	32	40	48	48	64	80	80	100	128		
2,00	32	40	48	48	64	80	80	100	128	128	160
2,50	32	40	40	48	64	80	80	100	100	128	160
3,00	32	32	40	48	48	64	80	100	100	128	128
3,50	24	32	40	40	48	64	64	80	100		
4,00	24	32	40	40	48	64	64	80	100		

Finding product number to order

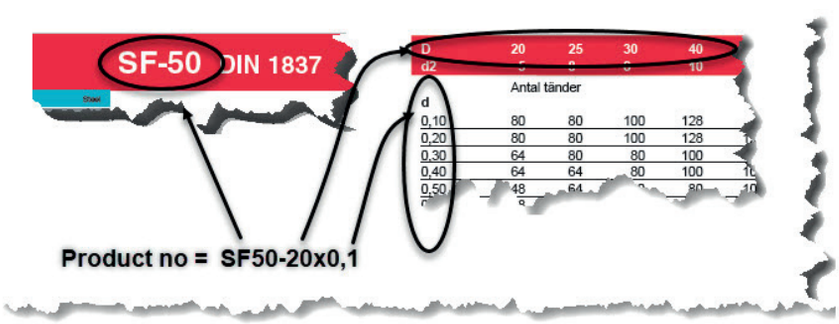

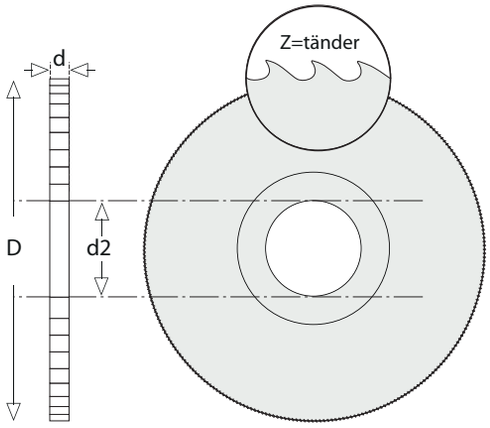

Carbide circular saw blades, DIN 1838
Coarse pitch for high cutting depth and long chipping material.

D	20	25	30	40	50	63	80	100	125	160
d2	5	8	8	10	13	16	22	22	22	32
	Antal tänder									
d										
0,20	32	32	32	48	48	64				
0,30	32	32	32	48	48	64	64			
0,40	32	32	32	48	48	64	64			
0,50	24	24	24	40	48	64	64	80		
0,60	24	24	24	40	48	48	64	80	80	
0,80	24	24	24	40	40	48	64	64	80	
1,00	20	20	20	32	40	48	64	64	64	80
1,20	20	20	20	32	40	40	48	64	64	80
1,40	20	20	20	32	32	40	48	48	64	
1,50	20	20	20	32	32	40	48	48	64	80
1,60	20	20	20	32	32	40	48	48	64	80
1,80	16	16	20	24	32	40	40	48	64	
2,00	16	16	20	24	32	40	40	48	64	64
2,50	16	16	20	24	32	32	40	48	48	64
3,00	16	16	18	24	24	32	40	40	48	64
4,00	16	16	18	20	24	32	32	40	48	

Grovtandad slitsfräs enligt DIN 1838-A • Även radie, zick zack, förstärkt kärna, medbringarspår m.m. • Övriga mått på förfrågan

Chuck for Slittingsaws

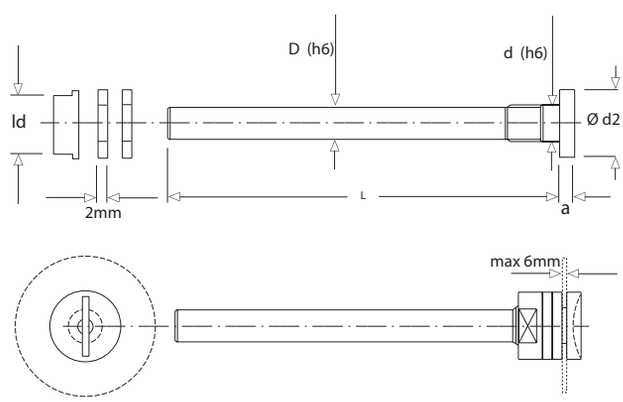

Artikelnummer	d	D	d2	L	a	ld
BC-5.0/4	5	4	10	50	3	8
BC-6.0/5	6	5	12	60	3	10
BC-8.0/6	8	6	15	70	3	13
BC-8.0/7	8	7	15	80	3	13
BC-10.0/6	10	6	18	70	3,5	15
BC-10.0/8	10	8	18	90	3,5	15
BC-13.0/10	13	10	22	110	3,5	19
BC-16.0/12	16	12	26	120	3,5	22

Rotation: righ-hand • Rear clamping with left-hand thread