welser profile®

Your sun shading system

shown in the most favorable light

www.welser.com

We are YOUR Partner
in the area of profiles

The family run Welser business has been founded in 1664. What long time ago began as a pan-smith's shop in Ybbsitz, nowadays is one of the biggest and most up-to-date centers for profile production due to its focus on the production of roll-formed open special profiles, welded profile tubes and entire modules made of steel, stainless steel and non-ferrous materials; the company also includes a technology center, production sites in Austria and Germany as well as sales offices around the world.

- > 350 years of experience in the metal working sector
- > 22,000 produced cross-sections
- A total production area of more than 500,000 m²
- > 60 profiling lines
- Everything from a single source

Our strengths:

- **Top scores** with respect to dimensional accuracy, material strength, straightness and twist tolerances
- **Service reliability** due to a standard product range on stock
- **Complex perforation patterns** ensure a high degree of modularity
- **High repetition accuracy** for further processing
- **Cost-effective production** of large lot quantities

Our product program for dealers and manufacturers is based on the following:

- A defined **high quality steel grade**
- An optimized **zinc-magnesium surface**
- **Certified suppliers of materials**
- **Selected profile cross sections in top quality** with extremely tight tolerances
- **Defined lengths**
- **Standardized packaging** ideal for stacking, transportation and storage
- **Predefined ordering processes and delivery periods** including tracking (from the primary material to the end product)
- **100% stock availability** (new)

Refined thin metal sheets

The all-rounders for sun shading

Thin metal sheets refined with zinc-magnesium are not only thinner and more durable, but they also offer a notably better corrosion resistance than common thin metal sheets with zinc coating and they also dispose of excellent protection against paint creep.

Besides zinc, the alloy of the zinc-magnesium coating also contains magnesium and aluminum of up to eight per cent. The excellent corrosion resistance is based on the interaction of two main mechanisms:

- the cathodic corrosion protection and
- the protective barrier effect

The general cathodic corrosion protection of a zinc-magnesium coating can be compared to the one of conventional zinc coating. However, the mixture of zinc-magnesium-aluminum alloy forms an additional tight, compact and structured surface layer against white rust corrosion, and this makes the difference. The layer offers a notably improved barrier against progressive corrosion. The result is as follows: Depending on the potential corrosion, the zinc-magnesium coating is only half as thick as a conventional zinc coating.

Coatings during a salt-spray mist test

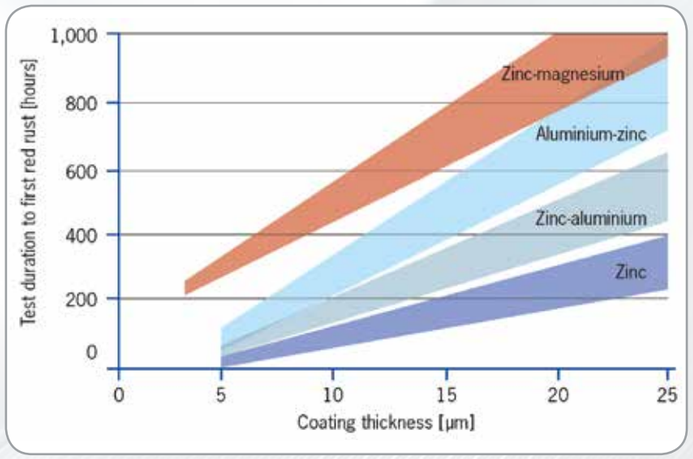

Corrosion reactions

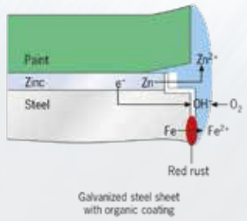

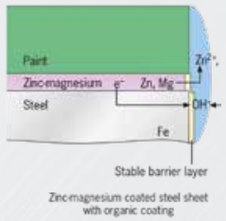

Advantages:

- Excellent corrosion protection, above all in a saline environment
- No limitations in product design and product characteristics with respect to corrosion resistance
- Material savings but identical corrosion resistance
- Capacity of "spontaneous healing" on edges and of scratches
- Notably increased forming capacity due to a harder surface and reduced abrasion
- Reduced cleaning efforts for tools and a minimum quantity of refuse disposal as from time to time there is no need for emulsion during the production process
- Increased lifespan and use cycles of the products
- Savings in valuable resources
- Environmentally friendly and energy-efficient production

Source: Stahl-Informations-Zentrum, 40039 Düsseldorf

Our service

Service beyond profiles

Simple ordering processes

Certified suppliers of materials

Competent advice

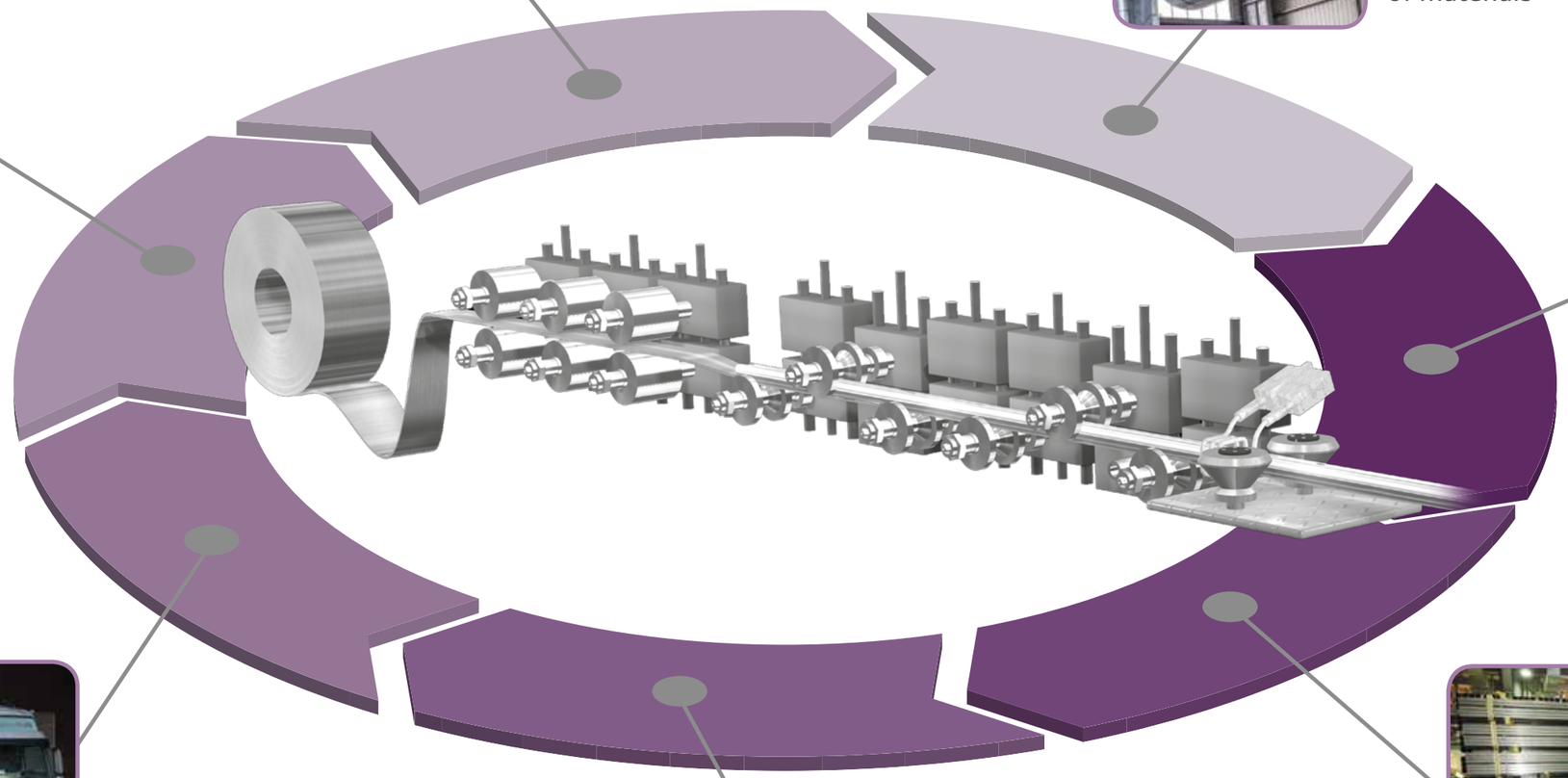

Certified quality standards

Safe transportation in standardized packages

Transparent processes including tracking

Optimum stock availability

Our product portfolio
for sun shading systems

Square profile 40/40/2	PP0009057-2	page	10
Square profile 50/30/2	PP0003903-2	page	11
Grooved tube 48 x 0.8	PP0005589-0.8	page	12
Grooved tube 63 x 1	PP0007117-1	page	13
Grooved tube 70 x 1	PP0000992-1	page	14
Grooved tube 78 x 1, flat groove	PP0008362-1	page	15
Grooved tube 78 x 1,25, flat groove	PP0008362-1.25	page	16
Grooved tube 78 x 1, round groove	PP0005063-1	page	17
Grooved tube 78 x 1,25, round groove	PP0005063-1.25	page	18
Grooved tube 85 x 1,0	PP0009219-1	page	19
Grooved tube 85 x 1,25	PP0009219-1.25	page	20
Grooved tube 100 x 1,5	PP0015925-1.5	page	21
Opti-grooved tube 80 x1	PP0017171-1	page	22
Opti-grooved tube 80 x 1,25	PP0017171-1.25	page	23

Lengths currently available:
5,000 mm, 6,000 mm and 7,000 mm

Square profile
40 x 40 x 2 mm

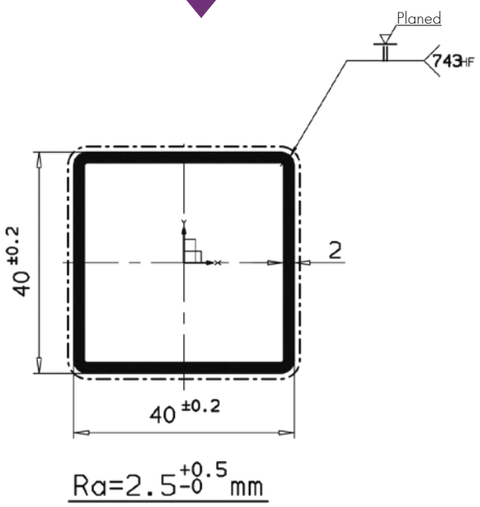

Material thickness: 2 mm
Product No: PP0009057-2
Weight: 2.36 kg/rm
Mechanical parameters:

Ix	7.14 cm^4
Iy	7.14 cm^4
Wx	3.6 cm^3
Wy	3.6 cm^3

Length tolerance: 0 / + 3 mm
Material: Zinc-magnesium S250 GD.ZM130 MA
Quantity per package: 50 pcs.

Load diagram:

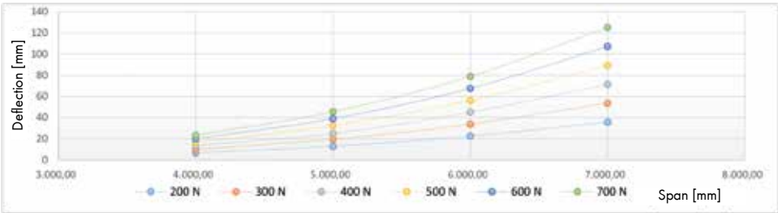

Calculation diagram just for illustration. Average values of the load in colors (uniform load movable - rigid). Calculations carried out using the lowest moment of inertia.

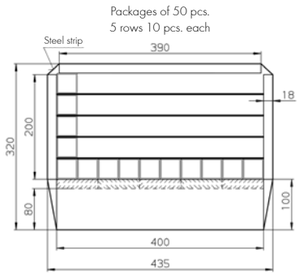

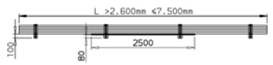

Square profile
50 x 30 x 2 mm

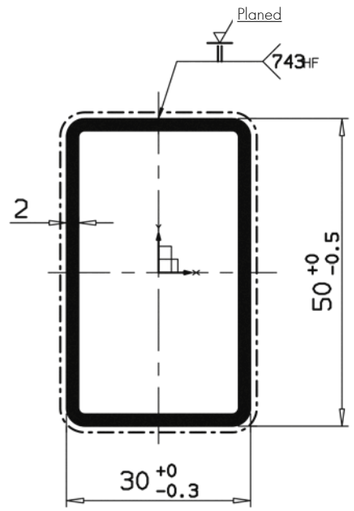

Material thickness: 2 mm
Product No: PP0003903-2
Weight: 2.36 kg/rm
Mechanical parameters:

Ix	9.75 cm^4
Iy	4.37 cm^4
Wx	3.9 cm^3
Wy	2.9 cm^3

Length tolerance: 0 / + 3 mm
Material: Zinc-magnesium S250 GD.ZM130 MA
Quantity per package: 50 pcs.

Load diagram:

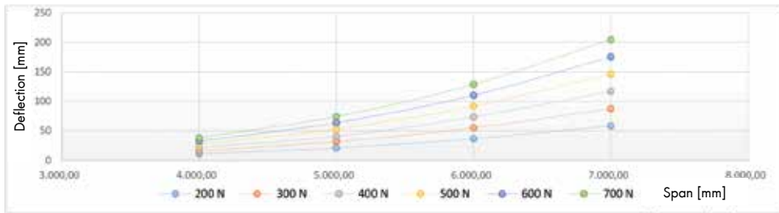

Calculation diagram just for illustration. Average values of the load in colors (uniform load movable - rigid). Calculations carried out using the lowest moment of inertia.

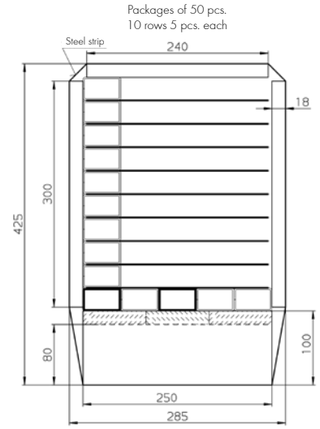

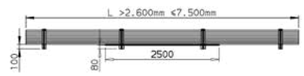

Grooved tube

48 x 0.8 mm

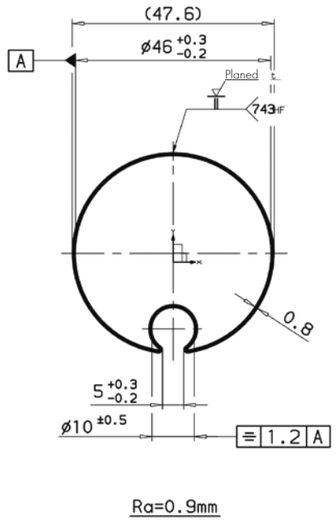

Material thickness: 0.8 mm
Product No: PP0005589-0.8
Weight: 1.07 kg/rm
Mechanical parameters:

Ix	3.6 cm^4
Iy	3.26 cm^4
Wx	1.4 cm^3
Wy	1.4 cm^3

Length tolerance: 0 / + 3 mm
Material: Zinc-magnesium S250 GD.ZM130 MA
Quantity per package: 46 pcs.

Load diagram:

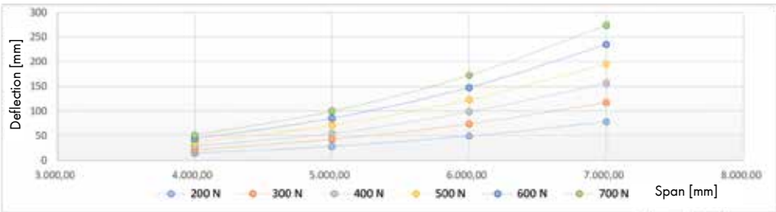

Calculation diagram just for illustration. Average values of the load in colors (uniform load movable - rigid). Calculations carried out using the lowest moment of inertia.

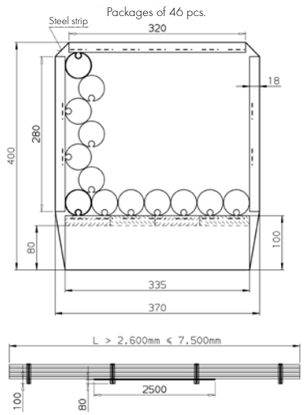

Grooved tube

63 x 1 mm

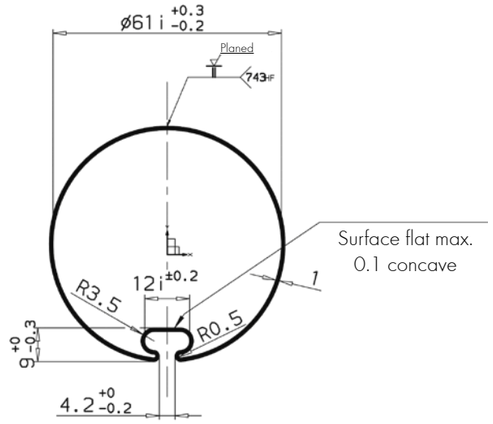

Material thickness: 1 mm
Product No: PP0007117-1
Weight: 1.73 kg/rm
Mechanical parameters:

Ix	10.67 cm^4
Iy	9.42 cm^4
Wx	3.1 cm^3
Wy	3.0 cm^3

Length tolerance: 0 / + 3 mm
Material: Zinc-magnesium S250 GD.ZM130 MA
Quantity per package: 46 pcs.

Load diagram:

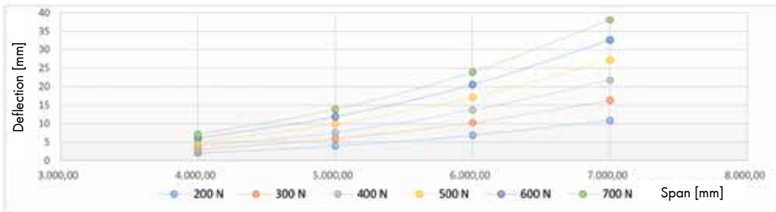

Calculation diagram just for illustration. Average values of the load in colors (uniform load movable - rigid). Calculations carried out using the lowest moment of inertia.

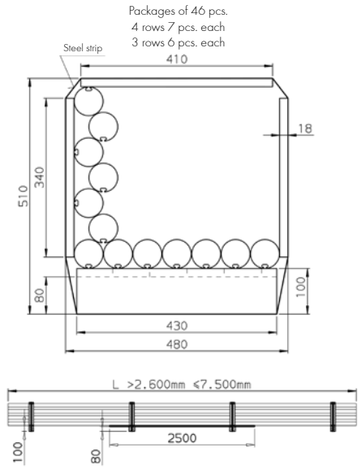

Grooved tube

70 x 1 mm

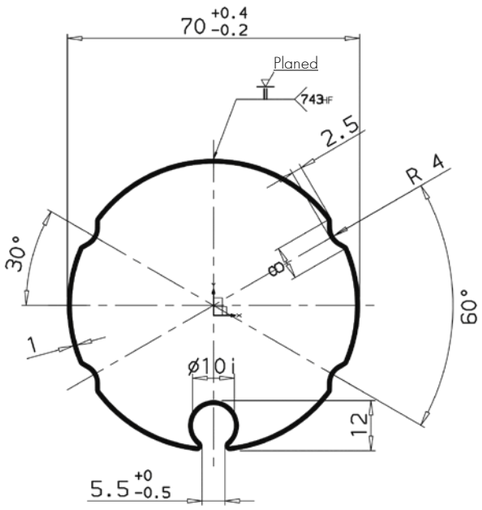

Material thickness: 1 mm
Product No: PP0000992-1
Weight: 1.89 kg/rm
Mechanical parameters:

Ix	14.28 cm^4
Iy	13.00 cm^4
Wx	3.8 cm^3
Wy	3.7 cm^3

Length tolerance: 0 / + 3 mm
Material: Zinc-magnesium S250 GD.ZM130 MA
Quantity per package: 53 pcs.

Load diagram:

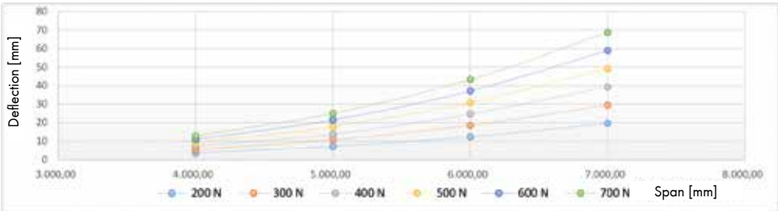

Calculation diagram just for illustration. Average values of the load in colors (uniform load movable - rigid). Calculations carried out using the lowest moment of inertia.

Packages of 53 pcs.
4 rows 8 pcs. each
3 rows 7 pcs. each

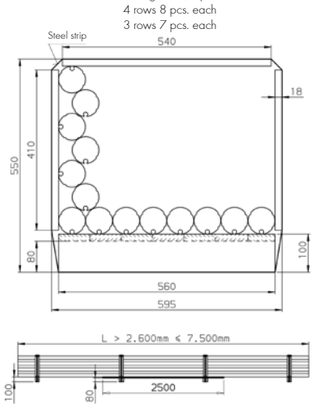

Grooved tube

78 x 1 mm, flat groove

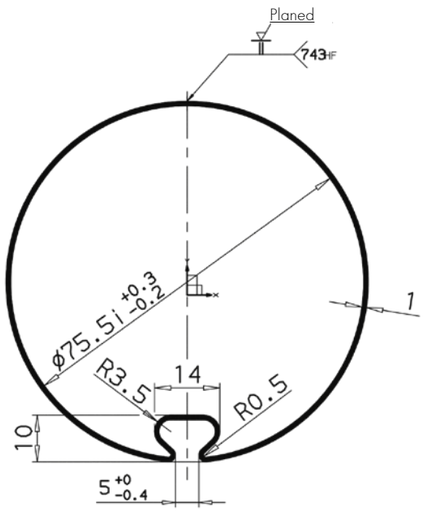

Material thickness: 1 mm
Product No: PP0008362-1
Weight: 2.08 kg/rm
Mechanical parameters:

Ix	19.62 cm^4
Iy	17.65 cm^4
Wx	4.7 cm^3
Wy	4.6 cm^3

Length tolerance: 0 / + 3 mm
Material: Zinc-magnesium S250 GD.ZM130 MA
Quantity per package: 46 pcs.

Load diagram:

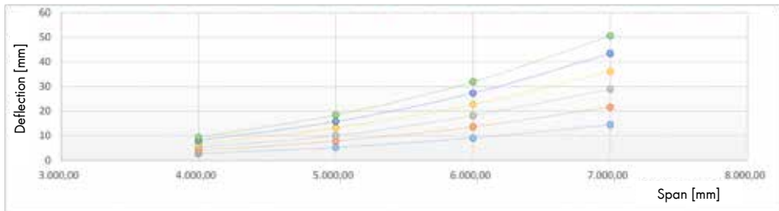

Calculation diagram just for illustration. Average values of the load in colors (uniform load movable - rigid). Calculations carried out using the lowest moment of inertia.

Packages of 46 pcs.
4 rows 7 pcs. each
3 rows 6 pcs. each

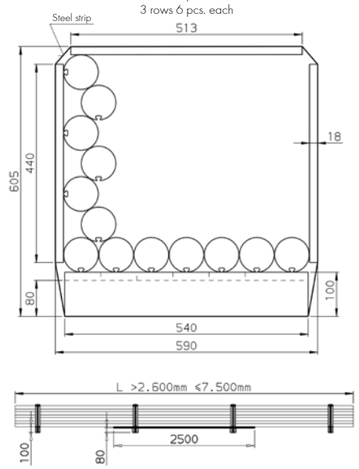

Grooved tube

78 x 1.25 mm, flat groove

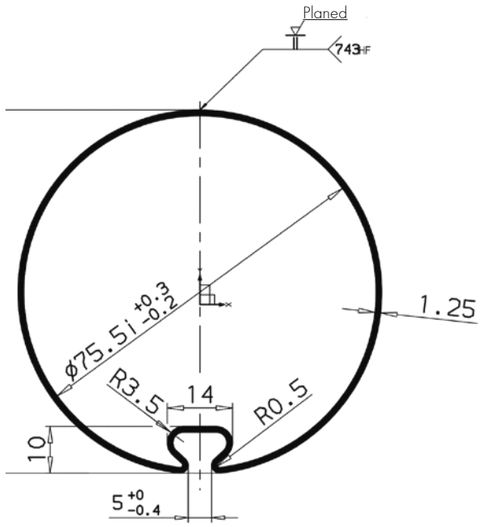

Material thickness: 1.25 mm
Product No: PP0008362-1.25
Weight: 2.60 kg/rm
Mechanical parameters:

Ix	24.64 cm^4
Iy	22.27 cm^4
Wx	5.9 cm^3
Wy	5.7 cm^3

Length tolerance: 0 / + 3 mm
Material: Zinc-magnesium S250 GD.ZM130 MA
Quantity per package: 46 pcs.

Load diagram:

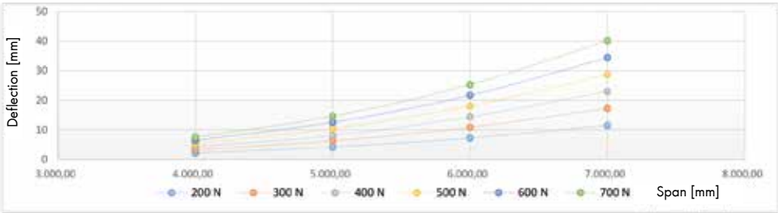

Calculation diagram just for illustration. Average values of the load in colors (uniform load movable - rigid). Calculations carried out using the lowest moment of inertia.

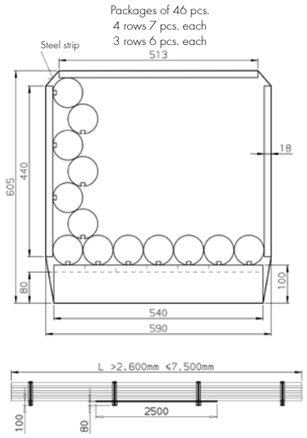

Grooved tube

78 x 1 mm, round groove

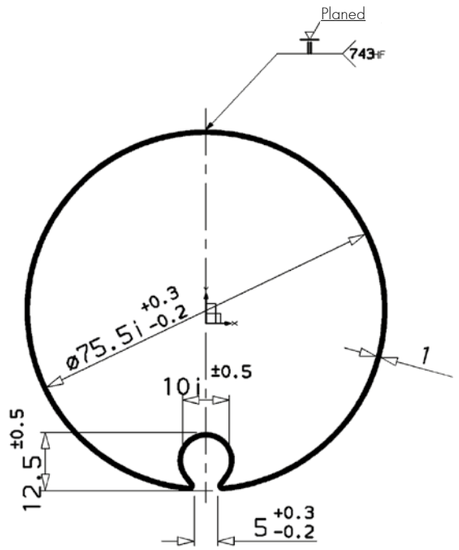

Material thickness: 1 mm
Product No: PP0005063-1
Weight: 2.08 kg/rm
Mechanical parameters:

Ix	19.51 cm^4
Iy	17.64 cm^4
Wx	4.7 cm^3
Wy	4.6 cm^3

Length tolerance: 0 / + 3 mm
Material: Zinc-magnesium S250 GD.ZM130 MA
Quantity per package: 46 pcs.

Load diagram:

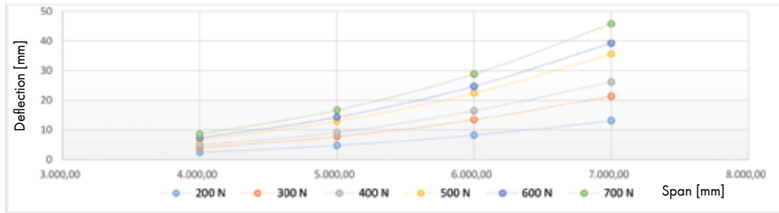

Calculation diagram just for illustration. Average values of the load in colors (uniform load movable - rigid). Calculations carried out using the lowest moment of inertia.

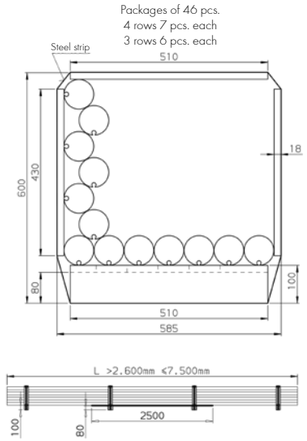

Grooved tube

78 x 1.25 mm, round groove

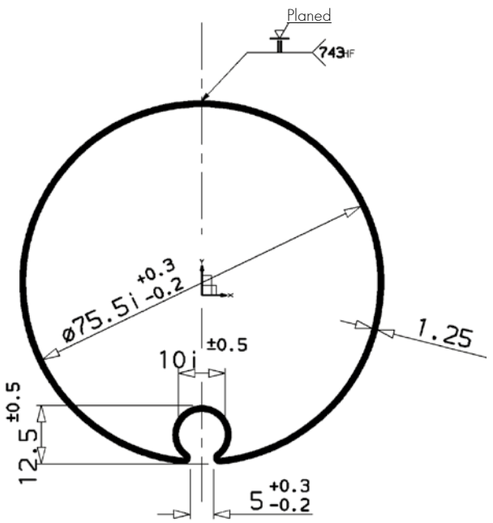

Material thickness: 1.25 mm
Product No: PP0005063-1.25
Weight: 2,60 kg/rm
Mechanical parameters:

Ix	24.58 cm^4
Iy	22.26 cm^4
Wx	5.9 cm^3
Wy	5.7 cm^3

Length tolerance: 0 / + 3 mm
Material: Zinc-magnesium S250 GD.ZM130 MA
Quantity per package: 46 pcs.

Load diagram:

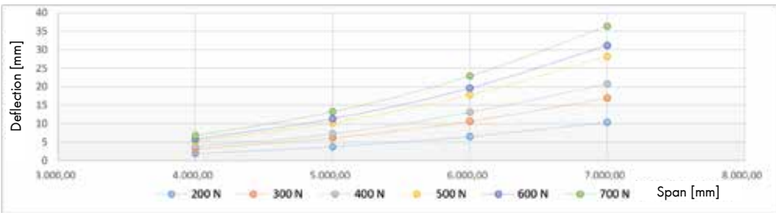

Calculation diagram just for illustration. Average values of the load in colors (uniform load movable - rigid). Calculations carried out using the lowest moment of inertia.

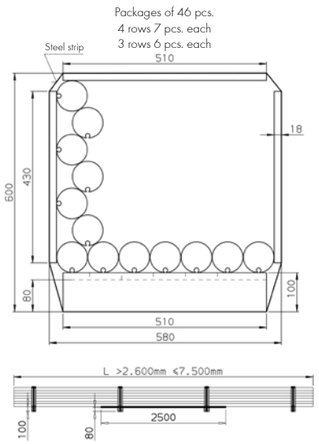

Grooved tube

85 x 1 mm

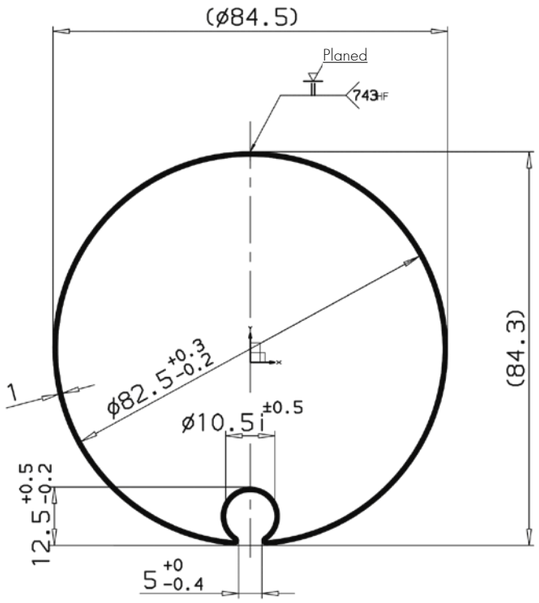

Material thickness: 1 mm
Product No: PP0009219-1
Weight: 2.26 kg/rm
Mechanical parameters:

Ix	25.39 cm^4
Iy	22.92 cm^4
Wx	5.6 cm^3
Wy	5.4 cm^3

Length tolerance: 0 / + 3 mm
Material: Zinc-magnesium S250 GD.ZM130 MA
Quantity per package: 39 pcs.

Load diagram:

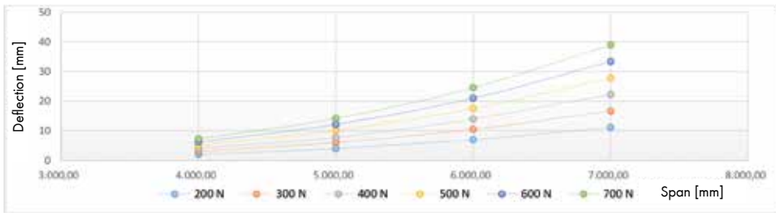

Calculation diagram just for illustration. Average values of the load in colors (uniform load movable - rigid). Calculations carried out using the lowest moment of inertia.

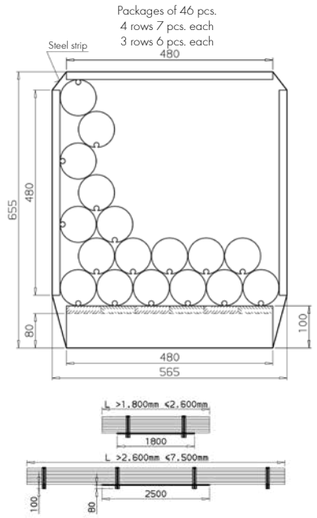

Grooved tube

85 x 1.25 mm

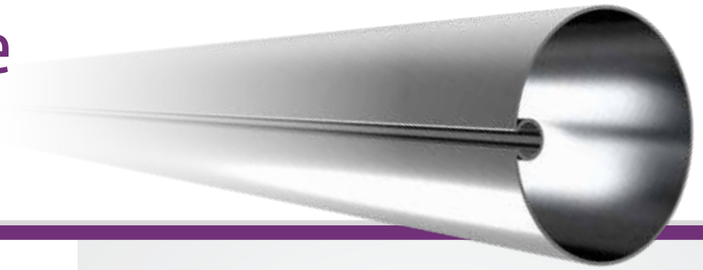

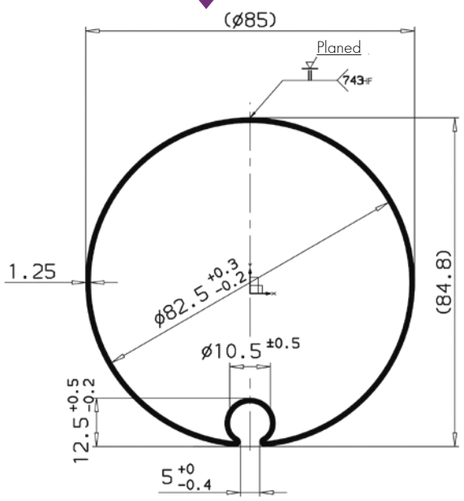

Material thickness: 1.25 mm
Product No: PP0009219-1.25
Weight: 2,83 kg/rm
Mechanical parameters:

Ix	31.98 cm^4
Iy	28.92 cm^4
Wx	7.1 cm^3
Wy	6.8 cm^3

Length tolerance: 0 / + 3 mm
Material: Zinc-magnesium S250 GD.ZM130 MA
Quantity per package: 39 pcs.

Load diagram:

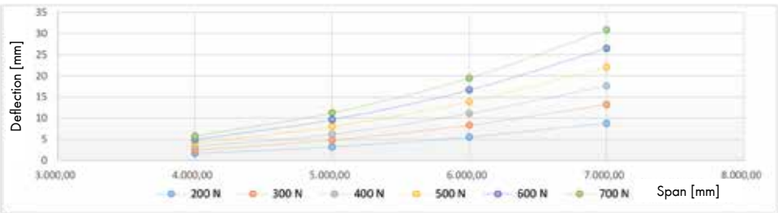

Calculation diagram just for illustration. Average values of the load in colors (uniform load movable - rigid). Calculations carried out using the lowest moment of inertia.

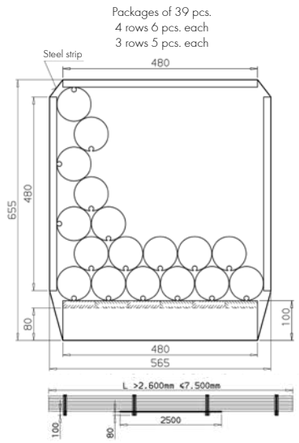

Grooved tube

100 x 1.5 mm

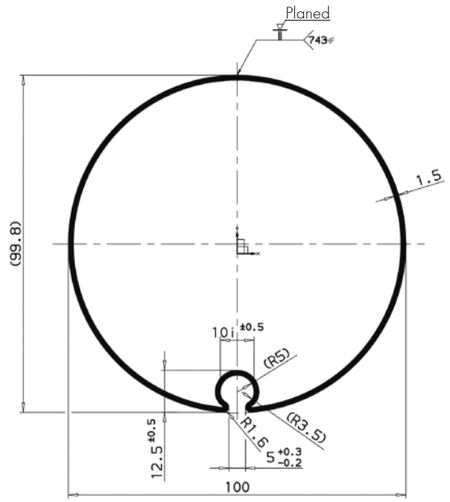

Material thickness: 1.5 mm
Product No: PP0015925-1.5
Weight: 3.91 kg/rm
Mechanical parameters:

Ix	61.64 cm^4
Iy	56.38 cm^4
Wx	11.7 cm^3
Wy	11.3 cm^3

Length tolerance: 0 / + 3 mm
Material: Zinc-magnesium S250 GD.ZM130 MA
Quantity per package: 46 pcs.

Load diagram:

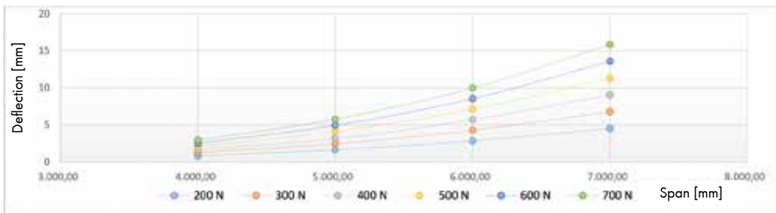

Calculation diagram just for illustration. Average values of the load in colors (uniform load movable - rigid). Calculations carried out using the lowest moment of inertia.

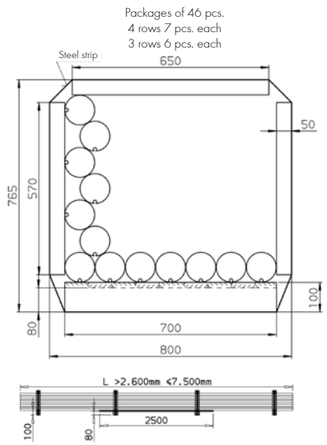

Opti-grooved tube

80 x 1 mm

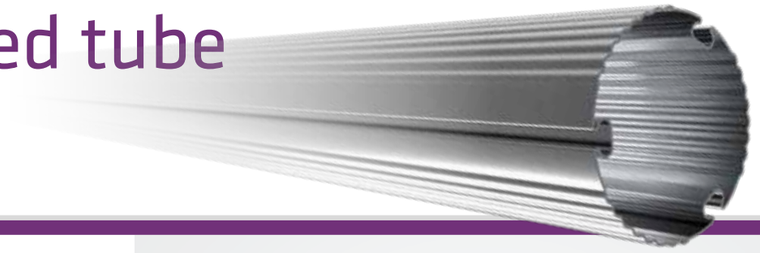

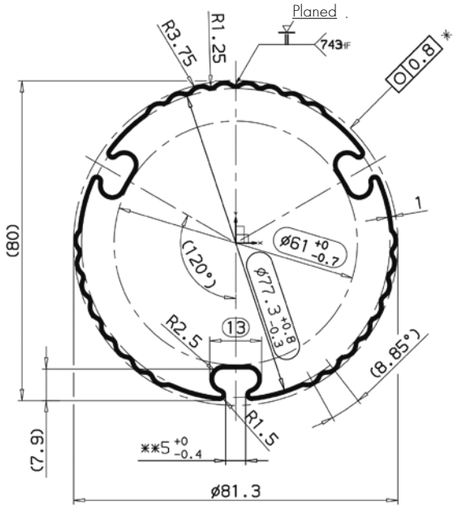

Material thickness: 1 mm
Product No: PP0017171-1
Weight: 2.52 kg/rm
Mechanical parameters:

Ix	23.48 cm^4
Iy	23.48 cm^4
Wx	5.8 cm^3
Wy	5.8 cm^3

Length tolerance: 0 / + 3 mm
Material: Zinc-magnesium S250 GD.ZM130 MA
Quantity per package: 46 pcs.

Load diagram:

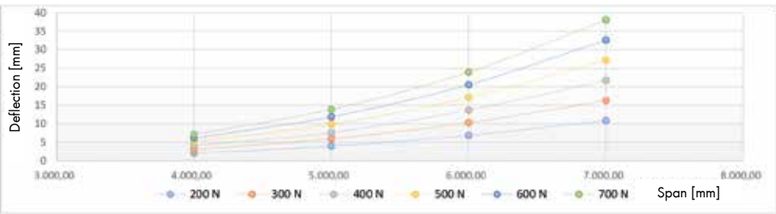

Calculation diagram just for illustration. Average values of the load in colors (uniform load movable - rigid). Calculations carried out using the lowest moment of inertia.

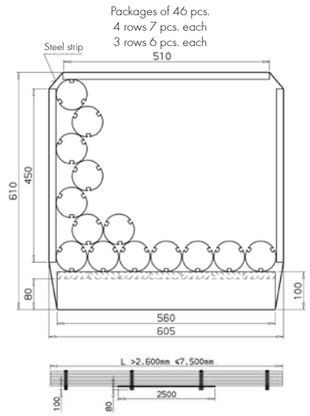

Opti-grooved tube

80 x 1.25 mm

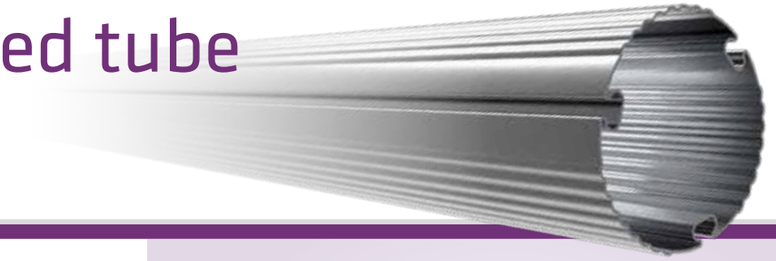

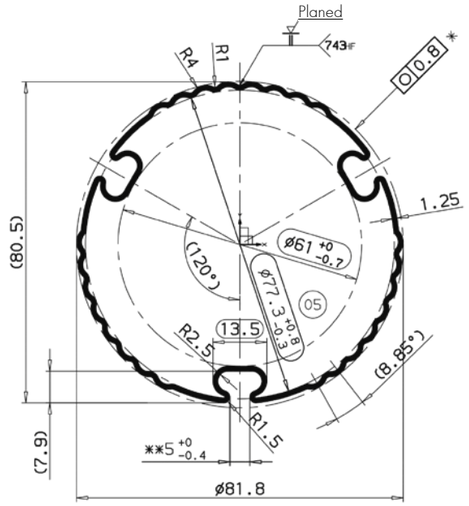

Material thickness: 1.25 mm
Product No: PP0017171-1.25
Weight: 3.13 kg/rm
Mechanical parameters:

Ix	29.63 cm^4
Iy	29.63 cm^4
Wx	7.3 cm^3
Wy	7.2 cm^3

Length tolerance: 0 / + 3 mm
Material: Zinc-magnesium S250 GD.ZM130 MA
Quantity per package: 39 pcs.

Load diagram:

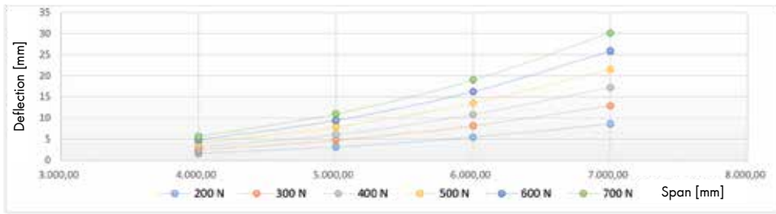

Calculation diagram just for illustration. Average values of the load in colors (uniform load movable - rigid). Calculations carried out using the lowest moment of inertia.

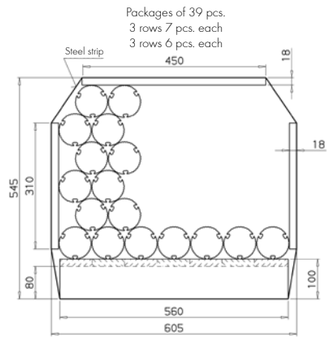

In addition to our standard profiles for sun shading
we offer you also individual profile solutions.
Do not hesitate to contact us. We are pleased to help you!

welser profile®

More than 2,000 employees across the three production plants in Ybbsitz (A), Gresten (A) and Bönen (G) and in the sales offices are working for you on a daily basis to successfully bring the requirements of our international customers to fruition.

Welser Profile GmbH
Prochenberg 24
A-3341 Ybbsitz / Austria
Phone: +43 7443 800-0
Fax: +43 7443 800-4111
at@welser.com

IMPRINT:
© Welser Profile Austria GmbH, A-3341 Ybbsitz
Layout: reichlundpartner.com, Outwork: Welser Profile, © Photos: Markilux, Warema, Weinor, Welser Profile.
Printed by Druckerei Queiser, 1st edition-DE-06.2018

www.welser.com